CONFORMED

PROJECT SPECIFICATIONS

FOR CONSTRUCTION ON

City Project No: 12-60C
Turlock Regional Transit Center Phase 2
FEDERAL GRANT: CA-90-Z297

IN STANISLAUS COUNTY,
TURLOCK, CALIFORNIA.

Development Services Department/ Engineering Division

Phone: (209) 668-5599 ext. 4417
Contact Person: Stephen Fremming

Proposals shall be delivered to Turlock, California
at or before 2:00 PM on Thursday, March 30, 2017
at the office of the City Engineer,
Development Services: Engineering Division
156 S. Broadway, Suite 150
Turlock, CA 95380

CONFORMED

****

Bids Open: March 30, 2017
Dated: February 21, 2017

IMPORTANT
SPECIAL NOTICES

****

This project utilizes federal funds and is administered through the Federal Transit Administration (FTA) regulations.

Public Works Contractor Registration Law [Senate Bill 854]
Prime contractors and subcontractors bidding on public works projects will be required to be registered with the Department of Industrial Relations (DIR). Prime contractors and subcontractors will be required to submit certified payroll records to the Labor Commissioner using DIR's new data-driven electronic Certified Payroll Record (eCPR) reporting system. Contractors will be able input CPR data directly onto an online form or do a mass upload using an xml schema flat file.). For more information, visit DIR's website, http://www.dir.ca.gov/Public-Works/PublicWorks.html.

Bidder's attention is directed to Section 00 90 00, "Special Provisions - Federal Transit Administration Clauses"

The payment of prevailing wage rates is required on this project.

Buy America provisions are in effect for this project.

The City of Turlock utilizes different mark up percentages than Caltrans or other agencies for labor, materials, equipment, and subcontractor work on Force Account work. Bidder's attention is directed to the Agreement for allowable mark up percentages on Force Account work.

Labor compliance posters must be posted on site per federal law. The posters that must be displayed and can be found online at http://www.dot.ca.gov/hq/construc/LaborCompliance/posters.htm

CONFORMED

CITY OF TURLOCK
STANISLAUS COUNTY, CALIFORNIA

Project No: 12-60C
Turlock Regional Transit Center Phase 2

LICENSEES RESPONSIBLE FOR SPECIFICATIONS

Contract documents prepared by or under the direction of the following registered persons:

City Engineer (Front end specifications)
Michael G. Pitcock
Development Services Department
Engineering Division
156 S. Broadway Suite 150
Turlock, CA 95380
(209) 668-5520

Architect
Barrett M. Lipomi
Pires, Lipomi + Navarro Architects
1720 G Street
Modesto, CA 95354
209-522-8900

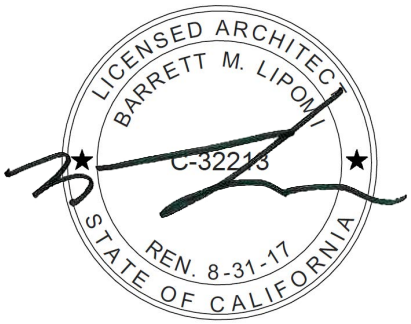

Structural Engineer
Brad Hawn
CHG Structural Consultants
920 13th Street
Modesto, CA 95354
209-604-2898

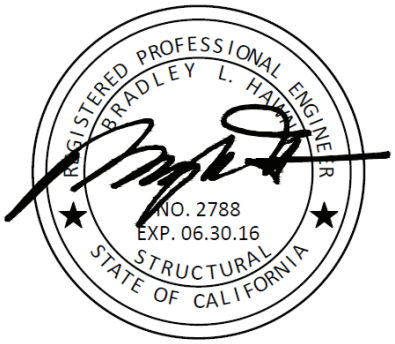

Civil Engineer
Michael Persak
O'Dell Engineering
1165 Scenic Drive, Suite B
Modesto, CA 95350
209-571-1765

CONFORMED

Mechanical Engineer
Allen Layman
Nexus Engineering
1400 Lone Palm Ave., Suite A
Modesto, CA 95351
209-572-7399

Electrical Engineer
Kevin Pezzoni
Miller Pezzoni & Associates, Inc.
909 Fifteenth St., Ste. 7
Modesto, CA 95354
209-575-0312

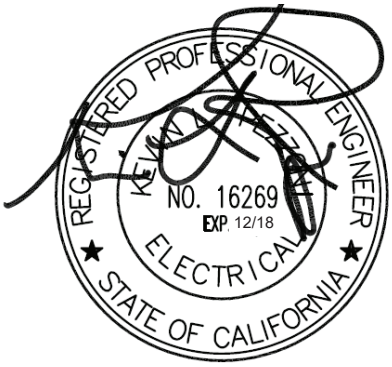

Landscape Architect
Chad A. Kennedy
O'Dell Engineering
1165 Scenic Drive, Suite B
Modesto, CA 95350
209-571-1765

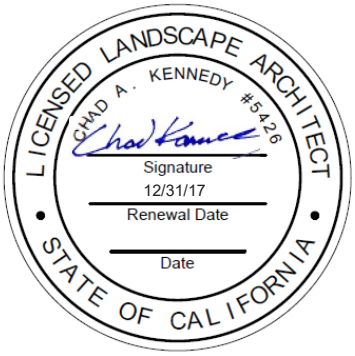

CONFORMED

TABLE OF CONTENTS

DIVISION 00 - PROCUREMENT AND CONTRACTING REQUIREMENTS

00 10 00 Notice to Contractors
00 20 00 Bid Submittal Checklist
00 30 00 Bid Form
00 40 00 Contractor Qualification Statement
00 50 00 Bidder's Bond
00 60 00 Subcontractors
00 70 00 Noncollusion Affidavit
00 70 01 Equal Employment Opportunity Certification
00 70 02 Non-lobbying Certification
00 70 03 Disclosure of Lobbying Activities
00 70 04 Disadvantaged Business Enterprise (DBE) Commitment
00 70 05 DBE Information – Good Faith Efforts
00 70 06 Buy America Certification
00 70 07 Disadvantaged Business Enterprise (DBE) Certification Status Change
00 70 08 Bidder's List of Subcontractors (DBE and Non-DBE) – Part I
00 70 09 Bidder's List of Subcontractors (DBE and Non-DBE) – Part II
00 70 10 Final Report – Utilization of Disadvantaged Business Enterprise (DBE)
00 70 11 Pre-Award Protest Procedures
00 80 00 Agreement
00 85 00 Bond for Faithful Performance
00 86 00 Bond for Labor and Material
00 87 00 Guaranty Bond
00 88 00 Escrow Bid Documents
00 90 00 Special Provisions - Federal Transit Administration Clauses

DIVISION 01 - GENERAL REQUIREMENTS

01 00 00 General Conditions
01 10 00 Supplementary Conditions

DIVISION 02 - EXISTING CONDITIONS

02 00 00 Existing Conditions

CONFORMED

TABLE OF CONTENTS

SECTION NUMBER	SECTION TITLE

TECHNICAL SPECIFICATIONS (DIVISION 03 – 41)

DIVISION 03 - CONCRETE

03 10 00	Concrete Forming
03 20 00	Concrete Reinforcing
03 30 00	Cast-in-Place Concrete
03 35 00	Concrete Finishing
03 35 19	Colored Concrete Finishing and Curing

DIVISION 04 - MASONRY

04 73 00	Simulated Stone Veneer

DIVISION 05 - METALS

05 12 00	Structural Steel Framing
05 40 00	Cold-Formed Metal Framing
05 51 50	Roof Access Ladder

DIVISION 06 - WOOD, PLASTICS AND COMPOSITES

06 10 00	Rough Carpentry
06 11 00	Framing and Sheathing
06 17 33	Wood I-Joists
06 18 00	Glued-Laminated Construction
06 41 00	Architectural Wood Casework

DIVISION 07 - THERMAL AND MOISTURE PROTECTION

07 21 15	Batt Insulation
07 22 00	Roof Insulation
07 25 00	Weather Barriers
07 26 00	Vapor Retarders
07 41 00	Manufactured Metal Roofing Panels
07 42 43	Composite Metal Wall Panels
07 52 00	Modified Bitumen 2 Ply Cold Roofing
07 62 00	Sheet Metal Flashing and Trim
07 62 01	Coping System
07 72 33	Roof Hatches
07 92 00	Joint Sealers

DIVISION 08 - OPENINGS

08 06 71	Door Hardware Schedule
08 11 13	Hollow Metal Doors and Frames
08 14 23	Clad Wood Doors
08 41 13	Aluminum Storefronts
08 56 53	Service Windows

CONFORMED

TABLE OF CONTENTS

SECTION NUMBER	SECTION TITLE
08 71 00	Door Hardware
08 71 13	Automatic Door Operators
08 71 00	Access Control Hardware
08 81 00	Solar Control Coated Glass

DIVISION 09 - FINISHES

09 24 00	Portland Cement Plastering
09 29 00	Gypsum Board
09 30 00	Tiling
09 51 00	Acoustical Ceilings
09 65 13	Resilient Base
09 65 16	Resilient Sheet Flooring
09 77 20	Decorative Fiberglass Reinforced Wall Panels
09 91 00	Painting

DIVISION 10 - SPECIALTIES

10 14 16	Plaques
10 14 23	Interior Panel Signs
10 14 29	Dimensional Letters
10 21 16	Plastic Toilet Compartments
10 26 00	Wall Protection
10 28 13	Toilet Accessories
10 44 13	Fire Extinguishers and Cabinets
10 51 13	Metal Lockers
10 55 23	**Mailboxes (*ADDENDUM 2*)**
10 71 13	Exterior Sun Control Device

DIVISION 11 - EQUIPMENT

NOT USED

DIVISION 12 - FURNISHINGS

12 48 13	**Entrance Floor Mats *(ADDENDUM 2)***
12 51 00	Systems Furniture
12 93 00	Site Furnishings
12 93 13	Bike Lockers

DIVISION 13 - SPECIAL CONSTRUCTION

NOT USED

DIVISION 14 - CONVEYING EQUIPMENT

NOT USED

DIVISION 21 – FIRE SUPPRESSION

21 13 13	Wet Pipe Sprinkler Systems

CONFORMED

TABLE OF CONTENTS

SECTION NUMBER	SECTION TITLE
DIVISION 22 – PLUMBING	
22 05 00	Basic Mechanical Materials and Methods
22 11 13	Facility Water Distribution Piping
22 11 13	Facility Sanitary Sewers
22 40 00	Plumbing
DIVISION 23 – HEATING, VENTILATING, and AIR CONDITIONING (HVAC)	
23 08 00	Heating, Ventilating, and air conditioning
DIVISION 25 – INTEGRATED AUTOMATION	
NOT USED	
DIVISION 26 – ELECTRICAL	
26 05 00	Common Work Results for Electrical
26 05 19	Low-Voltage Power Conductors and Cables
26 05 26	Grounding and Bonding for Electrical Systems
26 05 33	Raceways and Boxes
26 09 23	Lighting Control Devices
26 09 24	Networked Lighting Control Systems
26 23 50	Photovoltaic System
26 24 13	Switchboards
26 24 16	Panelboards
26 27 26	Wiring Devices
26 28 11	Overcurrent Protection Devices
26 28 16	Safety Swithes and Individual Mounted Circuit Breakers
26 50 00	Lighting
DIVISION 27 – COMMUNICATIONS	
27 05 26	Grounding and Bonding for Communications
27 05 28	Pathways for Communication Systems
27 11 16	Data Racks and Enclosures
27 15 13	Telecommunication / Data Cabling and Devices
27 15 23	Fiber Optic Cabling and Devices
27 15 33	Video Distribution
DIVISION 28 – ELECTRONIC SAFETY and SECURITY	
28 05 26	Grounding and Bonding for Electronic Safety and Security
28 05 33	Pathway for Electronic Safety and Security
28 16 00	Intrusion Detection System
28 23 00	CCTV Surveillance System
28 31 00	Fire Alarm System
DIVISION 31 - EARTHWORK	
31 11 00	Clearing and Grubbing
31 22 00	Grading
31 23 00	Excavation and Fill

CONFORMED

TABLE OF CONTENTS

SECTION NUMBER	SECTION TITLE
DIVISION 32 - EXTERIOR IMPROVEMENTS	
32 12 16	Asphalt Paving
32 13 13	Concrete Paving
32 14 00	Unit Paving
32 14 13	Precast Concrete Unit Paving
32 17 13	Parking Bumpers
32 17 23	Pavement Markings
32 17 26	Tactile Warning Surfacing
32 84 00	Planting Irrigation
32 93 00	Plants
DIVISION 33 - UTILITIES	
33 41 00	Storm Utility Drainage Piping
DIVISION 34 – TRANSPORTATION	
NOT USED	
DIVISION 41 – MATERIAL PROCESSING AND HANDLING EQUIPMENT	
NOT USED	
APPENDIX A – FEDERAL WAGE RATES	
APPENDIX B – TURLOCK IRRIGATION DISTRICT DRAWING OF PROPOSED UNDERGROUND FACILITIES REPLACING OVERHEAD FACILITIES	

END OF TABLE OF CONTENTS

SECTION 00 10 00

NOTICE TO CONTRACTORS

Sealed proposals will be received by the City Engineer of the City of Turlock, Development Services/Engineering Division, 156 S. Broadway, Suite 150, Turlock, California 95380, until 2:00 PM on Thursday, March 30th, 2017, for:

City Project No. 12-60C
Turlock Regional Transit Center Phase 2

In accordance with and as described and provided in the plans, specifications and the proposed form of contract therefore, all of which are on file in the office of the City Engineer, and to which special reference is hereby made.

No verbal, telegraphic, electronic mail, facsimile, or telephone Proposals shall be considered.

A ~~**Mandatory**~~ **Optional (*Addendum 1*)** Pre-Bid meeting will be held on March 21, 2017 at 10:00 AM at Turlock City Hall, 156 S. Broadway Suite 150, Turlock, CA 95380. Only prime contractors who intend to bid on the project are required to attend. **Prime contractors, (*Addendum 1*)** Sub-contractors and suppliers may attend but are not required to do so.

Proposals are required to be complete and for the entire work, materials and improvements unless the contrary is indicated in the specifications.

In accordance with the provisions of California Business and professions Code, Section 7028, Contractor shall possess one of the following Contractor license(s) at the time of bid and for the duration of the contract:

1. A-General Engineering Contractor
2. B-General Building Contractor

The DBE contract goal is: 4.23%

Failure to possess the specified license(s) shall render the Bid as non-responsive, shall act as a bar to award of the contract to any Bidder not possessing said license(s) at the time of Bid opening and shall result in the forfeiture of the security of said Bidder. Furthermore, any Bidder or Contractor not so licensed shall be subject to all legal penalties imposed by law, including, but not limited to, any appropriate disciplinary action by the Contractor's License Board.

Each proposal must be accompanied by cash, cashier's check, or check certified by a responsible bank, or by a bid bond, the proposed form of which is on file in the office of the City Engineer of said City and to which special reference is hereby made in a sum not less than ten percent (10%) of the total amount bid, payable to the City of Turlock as liquidated damages in the case the bidder is awarded the contract and fails within ten (10) days after the date of mailing to him by the City Engineer of a notice of award of the contract and that the contract is ready for signature to execute the above-mentioned written contract and file with the City Engineer satisfactory insurance certificates as required by the terms of said contract and satisfactory bonds as required by law for the faithful performance of said contract and for the protection of material, men and laborers. Special reference is hereby made to Sections 5100, et. seq., of the Public Contracts Code of the State of California and to the proposed forms for said bonds now on file in the office of the said City Engineer for further particulars regarding bonds.

Pursuant to Section 1773 of the Labor Code, the general prevailing wage rates in the county Stanislaus in which the work is to be done have been determined by the Director of the California Department of Industrial Relations. These wages are set forth in the General Prevailing Wage Rates for this project, available at 156 S. Broadway St, Turlock, CA 95380 and available from the California Department of Industrial Relations' Internet web site at http://www.dir.ca.gov/DLSR/PWD. The Federal minimum wage rates for this project as predetermined by the United States Secretary of Labor are set forth in the Bid book and in copies of this book that may be examined at the offices described above where project plans, special provisions, and bid

forms may be seen. Addenda to modify the Federal minimum wage rates, if necessary, will be issued to holders of Bid book. Future effective general prevailing wage rates, which have been predetermined and are on file with the California Department of Industrial Relations are referenced but not printed in the general prevailing wage rates.

Attention is directed to the Federal minimum wage rate requirements in the Bid book. The federal wage rates can be found at the following website: http://www.wdol.gov/dba.aspx If there is a difference between the minimum wage rates predetermined by the Secretary of Labor and the general prevailing wage rates determined by the Director of the California Department of Industrial Relations for similar classifications of labor, the Contractor and subcontractors shall pay not less than the higher wage rate. The Department will not accept lower State wage rates not specifically included in the Federal minimum wage determinations. This includes "helper" (or other classifications based on hours of experience) or any other classification not appearing in the Federal wage determinations. Where Federal wage determinations do not contain the State wage rate determination otherwise available for use by the Contractor and subcontractors, the Contractor and subcontractors shall pay not less than the Federal minimum wage rate, which most closely approximates the duties of the employees in question.

Bidders' attention is directed to the insurance requirements in the contract. It is highly recommended that bidders confer with their respective insurance carriers or brokers to determine in advance of bid submission the availability of insurance certificates and endorsements prescribed and provided herein. If an apparent low bidder fails to comply strictly with the insurance requirements, that bidder may be disqualified from award of the contract.

No proposal will be considered unless made on forms furnished by the City Engineer of said City at his office of said City. Each proposal must be sealed, and the envelope containing the same must be addressed to the City Engineer of the City of Turlock and must be plainly marked. Each proposal shall clearly identify the bidders name and address on the sealed envelope.

Each bid shall separately state in figures the price offered for the approximate quantity of each item set forth and shall also state in words and figures the total contract price. Quantities set forth in the proposal form and in the specifications are approximate only, being given as a basis for comparison of bids, and the City of Turlock does not expressly or implied agree that the actual amount of work or materials will correspond therewith, but reserves the right to increase or decrease the amount of any class or portion of the work or materials as may be deemed necessary by the City Engineer.

Proposals may not be withdrawn for a period of sixty (60) days after the time fixed for opening of proposals. The City Council of the City of Turlock reserves the right to reject any and all proposals or any part thereof and to waive any errors or informalities in any proposals and to set and act as sole judge of the merit and qualifications of the equipment, supplies or services offered.

At the request and expense of Contractor, pursuant to Division 2, Part 5, Section 22300, et. seq., of the Public Contracts Code, securities equivalent to any funds withheld as retention from progress payments made under this contract may be deposited with the City of Turlock or with a State or Federally chartered bank as escrow agent, who shall pay such moneys to Contractor upon completion of the contract.

Copies of the Contract Documents, including Instructions to Bidders, Bid Proposal forms, Plans and Specifications, may be downloaded from the engineering division’s web site or purchased for a non-refundable fee of Seventy Five dollars ($75) at the Office of the City Engineer, 156 S. Broadway, Ste. 150, Turlock, CA 95380, Phone (209) 668-5520. For additional information, go to http://www.cityofturlock.org/capitalprojects

The City of Turlock requires that Contractors take affirmative steps to comply with Executive Orders 11625, 12432 and 12138, and 34 CFR 85.36(e). Every feasible opportunity for minority and women's business enterprises to participate in procedures for gaining contracts and subcontracts shall be provided by each responsible Bidder submitting a proposal.

The U.S. Department of Transportation (DOT) provides a toll-free “hotline” service to report bid rigging activities. Bid rigging activities can be reported Mondays through Fridays, between 8:00 a.m. and 5:00 p.m.,

Eastern Time, Telephone No. 1-800-424-9071. Anyone with knowledge of possible bid rigging, bidder collusion, or other fraudulent activities should use the “hotline” to report these activities. The “hotline” is part of the DOT’s continuing effort to identify and investigate highway construction contract fraud and is operated under the direction of the DOT Inspector General. All information will be treated confidentially and caller anonymity will be respected.

No contractor or subcontractor may be listed on a bid proposal for a public works unless registered with the Department of Industrial Relations pursuant to Labor Code section 1725.5. No contractor or subcontractor may be awarded a contract for public work on a public works unless registered with the Department of Industrial Relations pursuant to Labor Code section 1725.5.

This project is subject to compliance monitoring and enforcement by the Department of Industrial Relations. The contractors and subcontractors must furnish electronic certified payroll records to the Labor Commissioner.

The contractor shall post job site notices prescribed by regulation. (*See* 8 Calif. Code Reg. §16451(d) for the notice that previously was required for projects monitored by the CMU.)

DATED: _____ CITY OF TURLOCK

By: _____
Michael G. Pitcock, PE
Development Services Director / City Engineer

END OF SECTION

CONFORMED

SECTION 00 20 00

BID SUBMITTAL CHECKLIST

Responsive proposals shall include the following documents:

		Specification Section No.
☐	Bid Form	00 30 00
☐	Contractor Qualification Statement	00 40 00
☐	Bidder's Bond	00 50 00
☐	Subcontractors	00 60 00
☐	Equal Employment Certification	00 70 01
☐	Disclosure of Lobbying Activities	00 70 03
☐	Disadvantaged Business Enterprise Commitment	00 70 04
☐	Buy America Certification	00 70 06

If the low bidder, 2nd low bidder, or 3rd low bidder has not met the specified DBE goal as documented in Section 00 70 04, Good Faith Effort (GFE) documentation must be submitted no later than 4:00 PM on the 3rd business day after the bid opening. 1st, 2nd, and 3rd low bidders are encouraged, though not required, to submit GFE documentation, even if the DBE commitment included in section 00 70 04 exceeds the DBE contract goal. See Section 00 70 05 for more information on GFE.

The three lowest Bidders shall submit within one week after receipt of Bids, one copy of all documentary information generated in preparation of Bid prices for this Project. This material is hereinafter referred to as "Escrow Bid Documents." The Escrow Bid Documents of the Successful Bidder will be held in escrow for the duration of the contract. See Section 00 88 00.

The Noncollusion Affidavit (Section 00 70 00) and Nonlobbying Certification for Federal-aid Contracts (Section 00 70 02) is not required to be signed and returned as a condition of a responsive bid, but are considered part of the contractor's bid upon signing of the bid form.

Bidder's List of Subcontractors (DBE and non-DBE) - Part I and Part II (Section 00 70 08 and Section 00 70 09) are not needed to be submitted with the bid, but are required to be submitted by all bidders after the bid opening.

END OF SECTION

SECTION 00 30 00

BID FORM

Project No. 12-60C

Turlock Regional Transit Center Phase 2

City of Turlock, California

DATED:_____

To: The Honorable City Council of the City of Turlock, California:

NAME OF BIDDER:_____

BUSINESS ADDRESS:_____

PLACE OF RESIDENCE:_____

Bids are to be submitted for the entire work. The amount of the bid for comparison purposes will be the total of all items. The bidder shall set forth for each unit basis item of work a unit price and a total for the item, and for each lump sum item a total for the item, all in clearly legible figures in the respective spaces provided for that purpose.

In the case of unit basis items, the amount set forth under the "Item Total" column shall be the product of the unit price bid and the estimated quantity for the item. In case of discrepancy between the unit price and the total set forth for a unit basis item, the unit price shall prevail except as provided in (a) or (b), as follows:

(a) If the amount set forth as unit price is unreadable or otherwise unclear, or is omitted, or is the same as the amount as the entry in the item total column, then the amount set forth in the item total column for the item shall prevail and shall be divided by the estimated quantity for the item and the price thus obtained shall be the unit price;

(b) (Decimal Errors) If the product of the entered unit price and the estimated quantity is exactly off by a factor of ten, one hundred, etc., or one-tenth, or one-hundredth, etc. from the entered total, the discrepancy will be resolved by using the entered unit price or item total, whichever most closely approximates percentage wise the unit price or item total in the Department's Final Estimate of cost.

Proposals may not be withdrawn for a period of sixty (60) days after the time fixed for opening of proposals. The City Council of the City of Turlock reserves the right to reject any and all proposals or any part thereof and to waive any errors or informalities in any proposals and to set and act as sole judge of the merit and qualifications of the equipment, supplies or services offered.
In accordance with the annexed Notice to Contractors, the undersigned, as bidder, declares that he has carefully examined the location of the proposed work, the plans, specifications and technical requirements therefore, and the proposed forms of contract and bonds mentioned or referred to in said Notice and on file in the office of the City Engineer of the City of Turlock, together with the prevailing rate of per diem wages for each craft or type of workmen needed to execute said contract; and he proposes and agrees that if this proposal is accepted, he will furnish all labor, materials, equipment, plant transportation, service, sales taxes, permit fees and other costs necessary to complete the construction in strict conformity to the plans and specifications and he will enter into a written contract with the City of Turlock in the form of contract on file in the Office of the City Engineer for such purposes, and that he will execute and/or provide all bonds and insurance certificates required by law and/or by said contract and/or mentioned in said Notice to Contractors all in accordance with and subject to all applicable laws, and that he will take in full payment therefore the following unit prices, to wit:

CONFORMED

PROJECT TITLE: Turlock Regional Transit Center Phase 2
PROJECT NUMBER: 12-60C
OPENING DATE: March 30, 2017
OPENING TIME: 2:00 PM
BIDDER'S NAME:

Item No.	Item Description	Unit of Measure	Estimated Quantity	Unit Price	Total
1	Turlock Regional Transit Center Phase 2	1	LS		

TOTAL BID WRITTEN IN FIGURES: $ __, __ __ __ , __ __ __ . __ __

TOTAL BID WRITTEN IN WORDS: _____

Bidder has examined and carefully studied the Bidding documents and other related data identified in the Bidding Documents and the following Addenda, receipt of which is hereby acknowledged

ADDENDA

No._____ **Date** _____ **Signed** _____
No._____ **Date** _____ **Signed** _____
No._____ **Date** _____ **Signed** _____
No._____ **Date** _____ **Signed** _____
No._____ **Date** _____ **Signed** _____

COMPANY'S NAME: _____

BY: _____

ADDRESS: _____
(Number) (Street)

_____
(City) (State) (ZIP)

CONTRACTOR'S PHONE #:
_____

NOTE: CONTRACTOR WILL BE REQUIRED TO LIST THEIR LICENSE NUMBER, EXPIRATION DATE, AND APPROPRIATE STATEMENT REGARDING PERJURY AND SIGNED BY INDIVIDUAL AUTHORIZED TO DO SO. FAILURE TO INCLUDE THE ABOVE ITEMS MAY CAUSE SAID CONTRACTOR'S BID TO BE REJECTED.

_____, Contractor's License #_____, Class__
(Company's Name)

Expires_____. This information is true, is provided as per section 7028.15 of the Business and Professions Code, and is made herein under penalty of perjury.

X_____
(Bidder's Signature) (Date)

If the proposal is accepted and the undersigned shall fail to contract as aforesaid and fail to file with the City insurance certificates as required by said contract, within fourteen (14) days after the bidder has received notice from the City Engineer or his representative of the City of Turlock that the contract has been awarded to bidder and is ready for signature, the City of Turlock may, at its option, determine that the bidder has abandoned his contract, and thereupon this proposal and the acceptance thereof shall be null and void.

Also accompanying this proposal is an affidavit of non collusion and questionnaire to general contractors, a statement of proposed sub contractors, if any, the address of mill, shop or office of any sub contractor, and a statement of work to be performed by sub contractors.

The names and addresses of persons interested in the foregoing proposal as principals are as follows:

(**IMPORTANT NOTICE**: If bidder or other interested person is a corporation, state legal name of corporation, also names of the president, secretary, treasurer, and manager thereof; if a partnership, state true name of firm, also names of all individual co partners composing firm; if bidder or other interested person is an individual, state first and last name in full.)

Licensed in accordance with an act providing for the registration of Contractors,
License No._____Expiration Date_____.

DATED:_____, 20_____

Address:_____

Phone:_____

X_____
Signature of Bidder

NOTE: If bidder is a corporation, the legal name of the corporation shall be set forth above together with the signature of the officers authorized to sign contracts on behalf of the corporation; if bidder is a co partnership, the true name of the firm shall be set forth above together with the signature of the partner or partners authorized to sign contracts in behalf of the co partnership; and, if bidder is an individual, his signature shall be placed above. If a signature is by an agent other than an officer of a corporation or a member of the partnership, a Power of Attorney must be on file with the City Clerk prior to opening or submitted with the bid; otherwise, the bid will be disregarded as irregular and unauthorized.

END OF SECTION

CONFORMED

SECTION 00 40 00

CONTRACTOR QUALIFICATION STATEMENT

The bidder is required to provide the following information. Attach additional sheets as necessary.

1. Bidder's present business name: _____

2. Number of years in business under present business name: _____

3. Other or former business names: _____

4. Enter information below as applicable to your business type:

   Date of incorporation: _____
   State of incorporation: _____
   President's name: _____
   Vice-president's name(s): _____
   Secretary's name: _____
   Treasurer's name: _____

   Type of partnership: _____
   Name(s) of general partners: _____
   Date of organization of partnership: _____

   Name of individual owner: _____
   Date of organization by individual owner: _____

5. Contractor's mailing address: _____

6. Contractor's telephone number: _____

7. List categories of work that your organization normally performs with its own forces: _____
   _____
   _____
   _____

8. Number of years of experience as a contractor in construction work or installation work similar to that required in these specifications: _____

9. Name of person(s) who inspected the site of the proposed work for your firm: _____
   _____

10. Date of Inspection: _____

Claims and Suits *(If the answer to any of the questions below is yes, attach details)*

11. Has your organizations ever failed to complete any work awarded to it?_____
12. Are there any judgments, claims, arbitration proceedings or suits pending or outstanding against your organization or its officers?_____
13. Has your organization filed any law suits or requested arbitration with regard to construction contracts within the last five years?_____

14. On a separate sheet, list major construction projects your organization has in progress, giving the name of project, owner, architect, contract amount, percent complete, and scheduled completion date:

15. State total worth of work in progress and under contract:_____

16. On a separate sheet, list the major projects your organization has completed in the past five years, giving the name of project, owner, architect, contract amount, date of completion, percentage of the cost of the work performed with your own forces, and any liquidated damages assessed.

END OF SECTION

SECTION 00 50 00

BIDDER'S BOND

KNOW ALL MEN BY THESE PRESENTS:

That we _____ as BIDDER, and _____ as SURETY a corporation duly organized under the laws of the State of _____ and duly licensed to become sole Surety on bonds required and authorized by the State of California, as SURETY, are held and firmly bound unto the City of Turlock, hereinafter called the City, in the penal sum of TEN PERCENT (10%) OF THE TOTAL AMOUNT OF THE BID of the Bidder above named, submitted by said Bidder to the City, for the work described below, for the payment of which sum in lawful money of the United States, well and truly to be made, we bind ourselves, our heirs, executors, administrators and successors, jointly and severally, firmly by these presents. In no case shall the liability of the Surety hereunder exceed the sum _____

_____

Dollars ($_____).

THE CONDITION OF THIS OBLIGATION IS SUCH THAT, whereas the bidder has submitted the above-mentioned bid to the City for certain construction specifically described as follows for which bids are to be opened at Engineering Division, Development Services Department, City Hall, 156 S. Broadway Suite 150, Turlock, California, on

_____, _____, 20____, at_____.
(day) (date) (time)
for **Project No. 12-60C, "Turlock Regional Transit Center Phase 2 ."**

NOW, THEREFORE, if the aforesaid Bidder is awarded the contract and, within the time manner required under the specifications after the prescribed forms are presented to him for signature, enters into a written contract in the prescribed form in accordance with the bid, and files the two bonds with the City, one to guarantee faithful performance and the other to guarantee payment for labor and materials as required by law, then obligation shall be null and void; otherwise, it shall be and remain in full force and virtue.

In the event suit is brought upon this bond by the Obligee and judgment is recovered, the Surety shall pay all costs incurred by the Obligee in such a suit, including a reasonable attorney's fee to be fixed by the court.

IN WITNESS WHEREOF, we have hereunto set our hands and seals on this _____day of _____, 201_.

BIDDER

_____**(SEAL)**
(Bidder's Name and Corporate Seal)

_____
(Signature)

_____
(Print Name and Title)

(ATTACH ACKNOWLEDGMENT OF BIDDER)

SURETY

_____**(SEAL)**
(Surety's Name and Corporate Seal)

_____
(Signature)

_____
(Print Name and Title)

(ATTACH ACKNOWLEDGMENT OF SURETY'S ATTORNEY-IN-FACT)

(ATTACH CERTIFIED COPY OF POWER OF ATTORNEY)

END OF SECTION

CONFORMED

SECTION 00 60 00

SUBCONTRACTORS

City Project No. 12-60C

Turlock Regional Transit Center Phase 2

Primary Contractor:_____

The bidder is required to provide the following information concerning his sub-contractors in accordance with Sections 4100 et. seq., inclusive, of the California Public Contracts Code. Sub-contractors listed below must be properly licensed under the laws of the State of California for the type of work which they are to perform. List all sub-contractors who will furnish work in excess of one-half (1/2) of one percent (1%) of the prime contractor's total bid or ten thousand dollars ($10,000), whichever is greater. Do not list alternate sub-contractors for the same work. Make copies of this sheet as needed.

NAME	LICENSE NUMBER	ADDRESS	TYPE OF WORK TO BE PERFORMED AND % OF ITEM

END OF SECTION

SECTION 00 70 00

NONCOLLUSION AFFIDAVIT

(Title 23 United States Code Section 112 and
Public Contract Code Section 7106)

To the CITY OF TURLOCK
DEPARTMENT DEVELOPMENT SERVICES.

In conformance with Title 23 United States Code Section 112 and Public Contract Code 7106 the bidder declares that the bid is not made in the interest of, or on behalf of, any undisclosed person, partnership, company, association, organization, or corporation; that the bid is genuine and not collusive or sham; that the bidder has not directly or indirectly induced or solicited any other bidder to put in a false or sham bid, and has not directly or indirectly colluded, conspired, connived, or agreed with any bidder or anyone else to put in a sham bid, or that anyone shall refrain from bidding; that the bidder has not in any manner, directly or indirectly, sought by agreement, communication, or conference with anyone to fix the bid price of the bidder or any other bidder, or to fix any overhead, profit, or cost element of the bid price, or of that of any other bidder, or to secure any advantage against the public body awarding the contract of anyone interested in the proposed contract; that all statements contained in the bid are true; and, further, that the bidder has not, directly or indirectly, submitted his or her bid price or any breakdown thereof, or the contents thereof, or divulged information or data relative thereto, or paid, and will not pay, any fee to any corporation, partnership, company association, organization, bid depository, or to any member or agent thereof to effectuate a collusive or sham bid.

Note: The above Noncollusion Affidavit is part of the Proposal. Signing this Proposal on the signature portion thereof shall also constitute signature of this Noncollusion Affidavit.

Bidders are cautioned that making a false certification may subject the certifier to criminal prosecution.

END OF SECTION

SECTION 00 70 01

EQUAL EMPLOYMENT OPPORTUNITY CERTIFICATION

(THE BIDDER'S EXECUTION ON THE SIGNATURE PORTION OF THIS PROPOSAL SHALL ALSO CONSTITUTE AN ENDORSEMENT AND EXECUTION OF THOSE CERTIFICATIONS WHICH ARE A PART OF THIS PROPOSAL)

The bidder_____, proposed subcontractor _____, hereby certifies that he has ___ , has not ____, participated in a previous contract or subcontract subject to the equal opportunity clauses, as required by Executive Orders 10925, 11114, or 11246, and that, where required, he has filed with the Joint Reporting Committee, the Director of the Office of Federal Contract Compliance, a Federal Government contracting or administering agency, or the former President's Committee on Equal Employment Opportunity, all reports due under the applicable filling requirements.

Note: The above certification is required by the Equal Employment Opportunity Regulations of the Secretary of Labor (41 CFR 60-1.7(b) (1)), and must be submitted by bidders and proposed subcontractors only in connection with contracts and subcontracts which are subject to the equal opportunity clause. Contracts and subcontracts which are exempt from the equal opportunity clause are set forth in 41 CFR 60-1.5. (Generally only contracts or subcontracts of $10,000 or under are exempt.)

Currently, Standard Form 100 (EEO-1) is the only report required by the Executive Orders or their implementing regulations.

Proposed prime contractors and subcontractors who have participated in a previous contract or subcontract subject to the Executive Orders and have not filed the required reports should note that 41 CFR 60-1.7(b) (1) prevents the award of contracts and subcontracts unless such contractor submits a report covering the delinquent period or such other period specified by the Federal Highway Administration or by the Director, Office of Federal Contract Compliance, U.S. Department of Labor.

END OF SECTION

SECTION 00 70 02

NONLOBBYING CERTIFICATION FOR FEDERAL-AID CONTRACTS

The prospective participant certifies, by signing and submitting this bid or proposal, to the best of his or her knowledge and belief, that:

(l) No Federal appropriated funds have been paid or will be paid, by or on behalf of the undersigned, to any person for influencing or attempting to influence an officer or employee of any Federal agency, a Member of Congress, an officer or employee of Congress, or an employee of a Member of Congress in connection with the awarding of any Federal contract, the making of any Federal grant, the making of any Federal loan, the entering into of any cooperative agreement, and the extension, continuation, renewal, amendment, or modification of any Federal contract, grant, loan, or cooperative agreement.

(2) If any funds other than Federal appropriated funds have been paid or will be paid to any person for influencing or attempting to influence an officer or employee of any Federal agency, a Member of Congress, an officer or employee of Congress, or an employee of a Member of Congress in connection with this Federal contract, grant, loan, or cooperative agreement, the undersigned shall complete and submit Standard Form-LLL, "Disclosure of Lobbying Activities," in conformance with its instructions.

This certification is a material representation of fact upon which reliance was placed when this transaction was made or entered into. Submission of this certification is a prerequisite for making or entering into this transaction imposed by Section 1352, Title 31, U.S. Code. Any person who fails to file the required certification shall be subject to a civil penalty of not less than $10,000 and not more than $100,000 for each such failure.

The prospective participant also agrees by submitting his or her bid or proposal that he or she shall require that the language of this certification be included in all lower tier subcontracts, which exceed $100,000 and that all such subrecipients shall certify and disclose accordingly.

END OF SECTION

SECTION 00 70 03

DISCLOSURE OF LOBBYING ACTIVITIES

COMPLETE THIS FORM TO DISCLOSE LOBBYING ACTIVITIES PURSUANT TO 31 U.S.C. 1352

1. Type of Federal Action:

☐ a. contract
b. grant
c. cooperative agreement
d. loan
e. loan guarantee
f. loan insurance

2. Status of Federal Action:

☐ a. bid/offer/application
b. initial award
c. post-award

3. Report Type:

☐ a. initial
b. material change

For Material Change Only:
year ____ quarter _____
date of last report _____

4. Name and Address of Reporting Entity

☐ Prime ☐ Subawardee
Tier _____, if known

Congressional District, if known

5. If Reporting Entity in No. 4 is Subawardee, Enter Name and Address of Prime:

Congressional District, if known

6. Federal Department/Agency:

7. Federal Program Name/Description:

CFDA Number, if applicable _____

8. Federal Action Number, if known:

9. Award Amount, if known:

10. a. Name and Address of Lobby Entity
(If individual, last name, first name, MI)

b. Individuals Performing Services (including address if different from No. 10a)
(last name, first name, MI)

(attach Continuation Sheet(s) if necessary)

11. Amount of Payment (check all that apply)

$_____ ☐ actual ☐ planned

12. Form of Payment (check all that apply):

☐ a. cash
☐ b. in-kind; specify: nature _____
value _____

13. Type of Payment (check all that apply)

☐ a. retainer
☐ b. one-time fee
☐ c. commission
☐ d. contingent fee
☐ e deferred
☐ f. other, specify _____

14. Brief Description of Services Performed or to be performed and Date(s) of Service, including officer(s), employee(s), or member(s) contacted, for Payment Indicated in Item 11:

(attach Continuation Sheet(s) if necessary)

15. Continuation Sheet(s) attached: **Yes** ☐ **No** ☐

16. Information requested through this form is authorized by Title 31 U.S.C. Section 1352. This disclosure of lobbying reliance was placed by the tier above when his transaction was made or entered into. This disclosure is required pursuant to 31 U.S.C. 1352. This information will be reported to Congress semiannually and will be available for public inspection. Any person who fails to file the required disclosure shall be subject to a civil penalty of not less than $10,000 and not more than $100,000 for each such failure.

Signature: _____

Print Name: _____

Title: _____

Telephone No.: _____ Date: _____

Federal Use Only:

Authorized for Local Reproduction
Standard Form - LLL

Standard Form LLL Rev. 09-12-97

INSTRUCTIONS FOR COMPLETION OF SF-LLL,
DISCLOSURE OF LOBBYING ACTIVITIES

This disclosure form shall be completed by the reporting entity, whether subawardee or prime Federal recipient, at the initiation or receipt of covered Federal action or a material change to previous filing pursuant to title 31 U.S.C. section 1352. The filing of a form is required for such payment or agreement to make payment to lobbying entity for influencing or attempting to influence an officer or employee of any agency, a Member of Congress an officer or employee of Congress or an employee of a Member of Congress in connection with a covered Federal action. Attach a continuation sheet for additional information if the space on the form is inadequate. Complete all items that apply for both the initial filing and material change report. Refer to the implementing guidance published by the Office of Management and Budget for additional information.

1. Identify the type of covered Federal action for which lobbying activity is and/or has been secured to influence, the outcome of a covered Federal action.
2. Identify the status of the covered Federal action.
3. Identify the appropriate classification of this report. If this is a follow-up report caused by a material change to the information previously reported, enter the year and quarter in which the change occurred. Enter the date of the last, previously submitted report by this reporting entity for this covered Federal action.
4. Enter the full name, address, city, state and zip code of the reporting entity. Include Congressional District if known. Check the appropriate classification of the reporting entity that designates if it is or expects to be a prime or subaward recipient. Identify the tier of the subawardee, e.g., the first subawardee of the prime is the first tier. Subawards include but are not limited to subcontracts, subgrants and contract awards under grants.
5. If the organization filing the report in Item 4 checks "Subawardee" then enter the full name, address, city, state and zip code of the prime Federal recipient. Include Congressional District, if known.
6. Enter the name of the Federal agency making the award or loan commitment. Include at least one organization level below agency name, if known. For example, Department of Transportation, United States Coast Guard.
7. Enter the Federal program name or description for the covered Federal action (item 1). If known, enter the full Catalog of Federal Domestic Assistance (CFDA) number for grants, cooperative agreements, loans and loan commitments.
8. Enter the most appropriate Federal identifying number available for the Federal action identification in item 1 (e.g., Request for Proposal (RFP) number, Invitation for Bid (IFB) number, grant announcement number, the contract grant. or loan award number, the application/proposal control number assigned by the Federal agency). Include prefixes, e.g., "RFP-DE-90-001."
9. For a covered Federal action where there has been an award or loan commitment by the Federal agency, enter the Federal amount of the award/loan commitments for the prime entity identified in item 4 or 5.
10. (a) Enter the full name, address, city, state and zip code of the lobbying entity engaged by the reporting entity identified in item 4 to influenced the covered Federal action.
    (b) Enter the full names of the individual(s) performing services and include full address if different from 10 (a). Enter Last Name, First Name and Middle Initial (Ml).
11. Enter the amount of compensation paid or reasonably expected to be paid by the reporting entity (item 4) to the lobbying entity (item 10). Indicate whether the payment has been made (actual) or will be made (planned). Check all boxes that apply. If this is a material change report, enter the cumulative amount of payment made or planned to be made.
12. Check the appropriate box(es). Check all boxes that apply. If payment is made through an in-kind contribution, specify the nature and value of the in-kind payment.
13. Check the appropriate box(es). Check all boxes that apply. If other, specify nature.
14. Provide a specific and detailed description of the services that the lobbyist has performed or will be expected to perform and the date(s) of any services rendered. Include all preparatory and related activity not just time spent in actual contact with Federal officials. Identify the Federal officer(s) or employee(s) contacted or the officer(s) employee(s) or Member(s) of Congress that were contacted.
15. Check whether or not a continuation sheet(s) is attached.
16. The certifying official shall sign and date the form, print his/her name title and telephone number.

Public reporting burden for this collection of information is estimated to average 30 minutes per response, including time for reviewing instruction, searching existing data sources, gathering and maintaining the data needed, and completing and reviewing the collection of information. Send comments regarding the burden estimate or any other aspect of this collection of information, including suggestions for reducing this burden, to the Office of Management

and Budget, Paperwork Reduction Project (0348-0046), Washington, D.C. 20503.
SF-LLL-Instructions Rev. 06-04-90«ENDIF»

CONFORMED

SECTION 00 70 04

DISADVANTAGED BUSINESS ENTERPRISE COMMITMENT

Exhibit 15-G Local Agency Bidder DBE Commitment (Construction Contracts)

NOTE: PLEASE REFER TO INSTRUCTIONS ON THE REVERSE SIDE OF THIS FORM

LOCAL AGENCY: _City of Turlock_____ LOCATION: _1418 N. Golden St. Blvd., Turlock Regional Transit Center_____

PROJECT DESCRIPTION: _Turlock Regional Transit Center Phase 2_____

TOTAL CONTRACT AMOUNT: $ _____

BID DATE: _____

BIDDER'S NAME: _____

CONTRACT DBE GOAL: _**4.23%**_____

CONTRACT ITEM NO.	ITEM OF WORK AND DESCRIPTION OR SERVICES TO BE SUBCONTRACTED OR MATERIALS TO BE PROVIDED (or contracted if the bidder is a DBE)	DBE CERT NO. AND EXPIRATION DATE	NAME OF EACH DBE (Must be certified on the date bids are opened - include DBE address and phone number)	DOLLAR AMOUNT DBE

For Local Agency to Complete:

Local Agency Contract Number: __12-60C_____

Federal-aid Project Number: _____

Federal Share: _____

Contract Award Date: _____

Local Agency certifies that all DBE certifications have been verified and information is complete and accurate.

_____ _____ _____
Print Name Signature Date
Local Agency Representative

(Area Code) Telephone Number: _____

Total Claimed DBE Participation

$_____

_____%

_____
Signature of Bidder

_____
Date (Area Code) Tel. No.

_____
Person to Contact (Please Type or Print)

Local Agency Bidder DBE Commitment (Construction Contracts)
(Rev 6/26/09)

Distribution: (1) Original – Local agency files

INSTRUCTIONS - LOCAL AGENCY BIDDER
DBE COMMITMENT (CONSTRUCTION CONTRACTS)

ALL BIDDERS:
PLEASE NOTE: This information may be submitted with your bid. If it is not, and you are the apparent low bidder or the second or third low bidder, it must submitted and received as specified in the Special Provisions. Failure to submit the required DBE commitment will be grounds for finding the bid nonresponsive
The form requires specific information regarding the construction contract: Local Agency, Location, Project Description, Total Contract Amount, Bid Date, Bidder's Name, and Contract DBE Goal.

The form has a column for the Contract Item Number and Item of Work and Description or Services to be Subcontracted or Materials to be provided by DBEs. Prime contractors shall indicate all work to be performed by DBEs including, if the prime is a DBE, work performed by its own forces, if a DBE. The DBE shall provide a certification number to the Contractor and expiration date. Enter the DBE prime's and subcontractors' certification numbers.The form has a column for the Names of DBE contractors to perform the work (who must be certified on the date bids are opened and include the DBE address and phone number).

IMPORTANT: Identify **all** DBE firms participating in the project regardless of tier. Names of the First-Tier DBE Subcontractors and their respective item(s) of work listed should be consistent, where applicable, with the names and items of work in the "List of Subcontractors" submitted with your bid.

There is a column for the DBE participation dollar amount. Enter the Total Claimed DBE Participation dollars and percentage amount of items of work submitted with your bid pursuant to the Special Provisions. (If 100% of item is not to be performed or furnished by the DBE, describe exact portion of time to be performed or furnished by the DBE.) See Section "Disadvantaged Business Enterprise (DBE)," of the Special Provisions (construction contracts), to determine how to count the participation of DBE firms.

Exhibit 15-G must be signed and dated by the person bidding. Also list a phone number in the space provided and print the name of the person to contact.

Local agencies should complete the Local Agency Contract Award, Federal-aid Project Number, Federal Share, Contract Award Date fields and verify that all information is complete and accurate before signing and filing.

END OF SECTION

SECTION 00 70 05

DBE INFORMATION — GOOD FAITH EFFORTS

The City of Turlock established a Disadvantaged Business Enterprise (DBE) goal of 4.23% for this project. The information provided herein shows that a good faith effort was made.

Lowest, second lowest and third lowest bidders shall submit the following information to document adequate good faith efforts. Bidders should submit the following information even if the "Local Agency Bidder DBE Commitment" form indicates that the bidder has met the DBE goal. This will protect the bidder's eligibility for award of the contract if the administering agency determines that the bidder failed to meet the goal for various reasons, e.g., a DBE firm was not certified at bid opening, or the bidder made a mathematical error.

Submittal of only the "Local Agency Bidder DBE Commitment" form may not provide sufficient documentation to demonstrate that adequate good faith efforts were made.

The following items are listed in the Section entitled "Submission of DBE Commitment" of the Special Provisions:

A. The names and dates of each publication in which a request for DBE participation for this project was placed by the bidder (please attach copies of advertisements or proofs of publication):

Publications	Dates of Advertisement

B. The names and dates of written notices sent to certified DBEs soliciting bids for this project and the dates and methods used for following up initial solicitations to determine with certainty whether the DBEs were interested (please attach copies of solicitations, telephone records, fax confirmations, etc.):

Names of DBEs Solicited	Date of Initial Solicitation	Follow Up Methods and Dates

C. The items of work which the bidder made available to DBE firms including, where appropriate, any breaking down of the contract work items (including those items normally performed by the bidder with its own forces) into economically feasible units to facilitate DBE participation. It is the bidder's responsibility to demonstrate that sufficient work to facilitate DBE participation was made available to DBE firms.

Items of Work	Bidder Normally Performs Item (Y/N)	Breakdown of Items	Amount ($)	Percentage Of Contract

D. The names, addresses and phone numbers of rejected DBE firms, the reasons for the bidder's rejection of the DBEs, the firms selected for that work (please attach copies of quotes from the firms involved), and the price difference for each DBE if the selected firm is not a DBE:

Names, addresses and phone numbers of rejected DBEs and the reasons for the bidder's rejection of the DBEs:

_____

_____

_____

_____

Names, addresses and phone numbers of firms selected for the work above:

_____

_____

_____

_____

E. Efforts made to assist interested DBEs in obtaining bonding, lines of credit or insurance, and any technical assistance or information related to the plans, specifications and requirements for the work which was provided to DBEs:

_____

_____

_____

_____

F. Efforts made to assist interested DBEs in obtaining necessary equipment, supplies, materials or related assistance or services, excluding supplies and equipment the DBE subcontractor purchases or leases from the prime contractor or its affiliate:

_____

_____

_____

_____

G. The names of agencies, organizations or groups contacted to provide assistance in contacting, recruiting and using DBE firms (please attach copies of requests to agencies and any responses received, i.e., lists, Internet page download, etc.):

Name of Agency/Organization	Method/Date of Contact	Results

H. Any additional data to support a demonstration of good faith efforts (use additional sheets if necessary):

_____

_____

NOTE: USE ADDITIONAL SHEETS OF PAPER IF NECESSARY.

END OF SECTION

SECTION 00 70 06

BUY AMERICA CERTIFICATION

Certification requirement for procurement of steel, iron, or manufactured products.

Certificate of Compliance with 49 U.S.C. 5323(j)(1)

The bidder or offeror hereby certifies that it will meet the requirements of 49 U.S.C. 5323(j)(1) and the applicable regulations in 49 CFR Part 661.5.

Date _____

Signature_____

Company Name_____

Title _____

Certificate of Non-Compliance with 49 U.S.C. 5323(j)(1)

The bidder or offeror hereby certifies that it cannot comply with the requirements of 49 U.S.C. 5323(j)(1) and 49 C.F.R. 661.5, but it may qualify for an exception pursuant to 49 U.S.C. 5323(j)(2)(A), 5323(j)(2)(B), or 5323(j)(2)(D), and 49 C.F.R. 661.7.

Date _____

Signature _____

Company Name _____

Title _____

END OF SECTION

CONFORMED

EXHIBIT 17-O DISADVANTAGED BUSINESS ENTERPRISES (DBE) CERTIFICATION STATUS CHANGE

STATE OF CALIFORNIA – DEPARTMENT OF TRANSPORTATION
CP-CEM-2403(F) (New. 10/99)

CONTRACT NUMBER	COUNTY	ROUTE	POST MILES	ADMINISTERING AGENCY	CONTRACT COMPLETION DATE
PRIME CONTRACTOR			BUSINESS ADDRESS		ESTIMATED CONTRACT AMOUNT

Prime Contractor: List all DBEs with changes in certification status (certified/decertified) while in your employ, whether or not firms were originally listed for good credit.
Attach DBE certification/Decertification letter in accordance with the Special Provisions

CONTRACT ITEM NO.	SUBCONTRACT NAME AND BUSINESS ADDRESS	BUSINESS PHONE	CERTIFICATION NUMBER	AMOUNT PAID WHILE CERTIFIED	CERTIFICATION/ DECERTIFICATION DATE Letter attached
				$	
				$	
				$	
				$	
				$	
				$	

Comments:

I CERTIFY THAT THE ABOVE INFORMATION IS COMPLETE AND CORRECT

CONTRACTOR REPRESENTATIVE SIGNATURE	TITLE	BUSINESS PHONE NUMBER	DATE

TO THE BEST OF MY KNOWLEDGE, THE ABOVE INFORMATION IS COMPLETE AND CORRECT

RESIDENT ENGINEER	BUSINESS PHONE NUMBER	DATE

Distribution Original copy -DLAE
Copy -1) Business Enterprise Program 2) Prime Contactor 3) Local Agency 4) Resident Engineer

CONFORMED

Form CP-CEM 2403(F) (New 10/99)
DISADVANTAGED BUSINESS ENTERPRISES (DBE) CHANGE IN CERTIFICATION STATUS REPORT

The top of the form requires specific information regarding the construction project: Contract Number, County, Route, Post Miles, the Administering Agency, the Contract Completion Date, and the Estimated Contract Amount. It requires the Prime Contractor's name and Business Address. The focus of the form is to substantiate and verify the actual DBE dollar amount paid to contractors on federally funded projects that had a changed in Certification status during the course of the completion of the contract. The two situations that are being addressed by CP-CEM 2403(F) are, if a firm certified as a DBE and doing work on the contract during the course of the project becomes Decertified, and if a non-DBE firm doing work on the contract during the course of the project becomes Certified as a DBE.

The form has a column to enter the Contract Item No (or Item Nos.) as well as a column for the Subcontractor's
Name, Business Address, Business Phone, and contractor's Certification Number.

The column entitled Amount Paid While Certified will be used to enter the actual dollar value of the work performed by those contractors who meet the conditions as outlined above during the time period they are Certified as a DBE. This column on the CP-CEM-2403(F) should only reflect the dollar value of work performed while the firm was Certified as a DBE.

The column called Certification/Decertification Date (Letter attached) will reflect either the date of the Decertification Letter sent out by the Civil Rights Program or the date of the Certification Certificate mailed out by the Civil Rights Program. There is a box to check that support documentation is attached to the CP-CEM-2403 (F) form.

There is a Comments section for any additional information that may need to be provided regarding any of the above transactions.

The CEM-2403(F) has an area at the bottom where the Contractor and the Resident Engineer sign and date that the information provided is complete and correct.

There is a Comments section for any additional information that may need to be provided regarding any of the above transactions.

The CEM-2403(F) has an area at the bottom where the Contractor and the Resident Engineer sign and date that the information provided is complete and correct.

END OF SECTION

CONFORMED

SECTION 00 70 08

BIDDER'S LIST OF SUBCONTRACTORS (DBE and NON-DBE)- PART I

~~The bidder shall list all subcontractors (both DBE and non-DBE) in accordance with Section 2-1.054 of the Standard Specifications and per Title 49, Section 26.11 of the Code of~~ Federal Regulations. This listing is required in addition to listing DBE Subcontractors elsewhere in the proposal. **Photocopy this form for additional firms.**

Firm Name/ Address/ City, State, ZIP	**Phone/ Fax**	**Annual Gross Receipts**	**Description of Portion of Work to be Performed**	**Local Agency Use Only (Certified DBE?)**
Name *Address* *City State ZIP*	*Phone* *Fax*	☐ < $1 million ☐ < $5 million ☐ < $10 million ☐ < $15 million > $15 million		YES NO *If YES list DBE #:* Age of Firm (Yrs.)
Name *Address* *City State ZIP*	*Phone* *Fax*	< $1 million ☐ < $5 million ☐ < $10 million ☐ < $15 million ☐ > $15 million		YES NO *If YES list DBE #:* Age of Firm (Yrs.)
Name *Address* *City State ZIP*	*Phone* *Fax*	< $1 million ☐ < $5 million ☐ < $10 million ☐ < $15 million ☐ > $15 million		YES NO *If YES list DBE #:* Age of Firm (Yrs.)
Name *Address* *City State ZIP*	*Phone* *Fax*	☐ < $1 million ☐ < $5 million ☐ < $10 million ☐ < $15 million ☐ > $15 million		YES NO *If YES list DBE #:* Age of Firm (Yrs.)

Distribution: 1) Original - Local Agency File

END OF SECTION

CONFORMED

SECTION 00 70 09

BIDDER'S LIST OF SUBCONTRACTORS (DBE and NON-DBE)- PART II

The bidder shall list all subcontractors who provided a quote or bid but were not selected to participate as a subcontractor on this project. This is required for compliance with Title 49, Section 26 of the Code of Federal Regulations. Photocopy this form for additional firms.

Firm Name/ Address/ City, State, ZIP	Phone/ Fax	Annual Gross Receipts	Description of Portion of Work to be Performed	Local Agency Use Only (Certified DBE?)
Name *Address* *City State ZIP*	*Phone* *Fax*	☐ < $1 million ☐ < $5 million ☐ < $10 million ☐ < $15 million ☐ > $15 million		YES NO *If YES list DBE #:* Age of Firm (Yrs.)
Name *Address* *City State ZIP*	*Phone* *Fax*	< $1 million < $5 million < $10 million < $15 million > $15 million		YES NO *If YES list DBE #:* Age of Firm (Yrs.)
Name *Address* *City State ZIP*	*Phone* *Fax*	< $1 million < $5 million < $10 million < $15 million > $15 million		YES NO *If YES list DBE #:* Age of Firm (Yrs.)
Name *Address* *City State ZIP*	*Phone* *Fax*	☐ < $1 million ☐ < $5 million ☐ < $10 million ☐ < $15 million > $15 million		YES NO *If YES list DBE #:* Age of Firm (Yrs.)

Distribution: 1) Original – Local Agency File

END OF SECTION

CONFORMED

SECTION 00 70 10

FINAL REPORT-UTILIZATION OF DISADVANTAGED BUSINESS ENTERPRISES (DBE), FIRST-TIER SUBCONTRACTORS

STATE OF CALIFORNIA - DEPARTMENT OF TRANSPORTATION

FINAL REPORT-UTILIZATION OF DISADVANTAGED BUSINESS ENTERPRISES (DBE), FIRST-TIER SUBCONTRACTORS

ADA Notice
For individuals with sensory disabilities, this document is available in alternate formats. For information call (916) 654-6410 or TDD (916) 654-3880 or write Records and Forms Management, 1120 N Street, MS-89, Sacramento, CA 95814

CEM-2402F (REV 02/2008)

CONTRACT NUMBER	COUNTY	ROUTE	POST MILES	FEDERAL AID PROJECT NO.	ADMINISTERING AGENCY		CONTRACT COMPLETION DATE
PRIME CONTRACTOR			BUSINESS ADDRESS			ESTIMATED CONTRACT AMOUNT $	

ITEM NO.	DESCRIPTION OF WORK PERFORMED AND MATERIAL PROVIDED	COMPANY NAME AND BUSINESS ADDRESS	DBE CERT. NUMBER	CONTRACT PAYMENTS NON-DBE	CONTRACT PAYMENTS DBE	DATE WORK COMPLETE	DATE OF FINAL PAYMENT
				$	$		
				$	$		
				$	$		
				$	$		
				$	$		
				$	$		
				$	$		
				$	$		
				$	$		
				$	$		
				$	$		
				$	$		
ORIGINAL COMMITMENT $			TOTAL	$	$		

DBE

List all First-Tier Subcontractors, Disavantaged Business Enterprises (DBEs) regardless of tier, whether or not the firms were originally listed for goal credit. If actual DBE utilization (or item of work) was different than that approved at time of award, provide comments on back of form. List actual amount paid to each entity.

I CERTIFY THAT THE ABOVE INFORMATION IS COMPLETE AND CORRECT

CONTRACTOR REPRESENTATIVE'S SIGNATURE	BUSINESS PHONE NUMBER	DATE

TO THE BEST OF MY INFORMATION AND BELIEF, THE ABOVE INFORMATION IS COMPLETE AND CORRECT

RESIDENT ENGINEER'S SIGNATURE	BUSINESS PHONE NUMBER	DATE

Copy Distribution-Caltrans contracts: **Original** - District Construction **Copy**- Business Enterprise Program **Copy**- Contractor **Copy** Resident Engineer

CONFORMED

FINAL REPORT – UTILIZATION OF DISADVANTAGED BUSINESS ENTERPRISES (DBE), FIRST-TIER SUBCONTRACTORS
CEM 2402(F) (Rev. 02/2008)

The form requires specific information regarding the construction project: Contract Number, County, Route, Post Miles, Federal-aid Project No., the Administering Agency, the Contract Completion Date and the Estimated Contract Amount. It requires the prime contractor name and business address. The focus of the form is to describe who did what by contract item number and descriptions, asking for specific dollar values of item work completed broken down by subcontractors who performed the work both DBE and non-DBE work forces. DBE prime contractors are required to show the date of work performed by their own forces along with the corresponding dollar value of work.

The form has a column to enter the Contract Item No. (or Item No's) and description of work performed or materials provided, as well as a column for the subcontractor name and business address. For those firms who are DBE, there is a column to enter their DBE Certification Number. The DBE should provide their certification number to the contractor and notify the contractor in writing with the date of the decertification if their status should change during the course of the project.

The form has six columns for the dollar value to be entered for the item work performed by the subcontractor.

The Non-DBE column is used to enter the dollar value of work performed for firms who are not certified DBE.

The decision of which column to be used for entering the DBE dollar value is based on what program(s) status the firm is certified. This program status is determined by the California Unified Certification Program by ethnicity, gender, ownership, and control issues at time of certification. To confirm the certification status and program status, access the Department of Transportation Civil Rights web site at: http://www.dot.ca.gov/hq/bep or by calling (916) 324-1700 or the toll free number at (888) 810-6346.

Based on this DBE Program status, the following table depicts which column to be used:

DBE Program Status	Column to be used
If program status shows DBE only with no other programs listed	DBE

If a contractor performing work as a DBE on the project becomes decertified and still performs work after their decertification date, enter the total dollar value performed by this contractor under the appropriate DBE identification column.

If a contractor performing work as a non-DBE on the project becomes certified as a DBE, enter the dollar value of all work performed after certification as a DBE under the appropriate identification column.

Enter the total of each of the six columns in Form CEM-2402(F).

Any changes to DBE certification must also be submitted on Form-CEM 2403(F).

Enter the Date Work Completed as well as the Date of Final Payment (the date when the prime contractor made the "final payment" to the subcontractor for the portion of work listed as being completed).

The contractor and the resident engineer sign and date the form indicating that the information provided is complete and correct.

SECTION 00 70 11

PRE-AWARD PROTEST PROCEDURES

The City of Turlock reserves the right, without qualification, to select a proposal based on the criteria outlined in this RFP, exercise discretion and apply judgment with respect to any submitted proposal, or reject all proposals.

Failure to strictly comply with the protest procedures delineated below with respect to timeliness or protest contents will render a protest untimely and/or inadequate and will result in rejection thereof by the City. Protests may only be filed against making an award, received after receipt of proposals, but before the award of contract. A pre -award protest must be sent by certified mail and received by the City of Turlock Development Services Department, Engineering Division, within five (5) working days after the protester knows or should have known of the facts and circumstances upon which the protest is based. Prospective consultants will be notified, by issuance of an addendum or bulletin that a protest has been filed if scheduled dates have been postponed as a result of the protest.

The pre-award protest shall include all of the following: the name of the protester, City project number, a detailed description of the specific grounds for protest, any supporting documentation, and the specific ruling or relief requested. The City will respond to the substantive issue raised in the pre-award protest in detail and will provide a final written determination via certified mail within ten (10) working days of receiving the Pre -Award Protest.

A request for protest reconsideration may be submitted if data becomes available that was not previously known or there has been an error of law or regulation. A written request for reconsideration shall be submitted to the City Engineer and must be received by the City Engineer within seven (7) working days from the postmark date of the reply from the City Engineer. The City will send a final, written decision regarding the pre-award protest within twenty-five (25) working days of the receipt of the request for reconsideration.

END OF SECTION

CONFORMED

SECTION 00 80 00

AGREEMENT

FOR PUBLIC IMPROVEMENT

Project No. 12-60C

Turlock Regional Transit Center Phase 2

THIS AGREEMENT is entered into by and between the CITY OF TURLOCK, a Municipal Corporation, hereinafter called "City," and _____ hereinafter called "Contractor" on this _____ day of _____, 20__ (hereinafter called the "Agreement").

RECITALS

A City has taken appropriate proceedings to authorize construction of the public work and improvements herein provided and execution of this contract.

B A notice was duly published for bids for the contract for the improvement hereinafter described.

C On _____, 20__, after notice duly given, the City Council of the City of Turlock awarded the contract for the construction of the improvements hereinafter described to Contractor, which Contractor said Council found to be the lowest responsible bidder for said improvements.

D City and Contractor desire to enter into this Agreement for the construction of said improvements.

IT IS AGREED AS FOLLOWS:

1. Scope Of Work:

Contractor shall perform the work described briefly as follows:

The work entails Construction of the Turlock Regional Transit Center Phase 2 project, consisting, in general of:

- Construction of a 6,092 square foot, single story office building with office space for City transit operations, ticketing window, lobby with public restrooms, and unimproved cold shell space
- Three (3) shade structures, with approximate covered areas of 3,800 square feet, 1,200 square feet, and 1,800 square feet constructed over existing passenger waiting areas
- Installation of photovoltaic arrays

- Seventy-seven space concrete parking lot
- Wet and dry utilities to service the new building and parking lot
- Site improvements, such as site lighting, landscaping, and pedestrian facilities

The work includes furnishing all necessary labor, materials, tools, equipment and incidentals needed to perform the improvements as shown on the contract plans complete and in place. This work shall be completed in accordance with the City of Turlock Standard Specifications and Drawings and these Special Provisions.

The aforesaid improvements are further described in the plans, specifications and technical requirements for such project, copies of which are on file in the office of the City Engineer, and which are incorporated herein by reference as if set forth fully herein.

2. The Contract:

The complete contract consists of the following documents: This Agreement, the notice to contractors, the contractor's accepted proposal, general conditions, supplementary conditions, project specifications, plans and detailed drawings, addenda, faithful performance bond, labor and materials bond, guaranty bond, and any and all supplemental agreements amending, decreasing, or extending the work contemplated or which may be required to complete the work in a substantial and acceptable manner. The current edition of the "City of Turlock Standard Specifications and Drawings" is hereby incorporated as a part of the contract.

All rights and obligations of City and Contractor are set forth and described in the contract.

All of the above named documents are intended to incorporate the terms of the others so that any work called for in one and not mentioned in the other, or vice versa, is to be executed the same as if mentioned in all said documents. The documents comprising the complete contract will hereinafter be referred to as the "contract". In case of any dispute, the decision of the City Engineer shall be final.

3. Schedule:

All work shall be performed in accordance with the schedule approved by the City Engineer and under his direction.

4. Equipment & Performance Of Work:

Contractor shall furnish all tools, equipment, facilities, labor and materials necessary to perform and complete in good workmanlike manner the work of general construction as called for and in the manner designated in and in strict conformity with the plans and specifications for said work, which said specifications are entitled, "General Conditions and Special Provisions for **City Project No. 12-60C, "Turlock Regional Transit Center Phase 2 ."**

The equipment, apparatus, facilities, labor and material shall be furnished, and said work performed and completed as required in said plans and specifications under the direction and supervision, and subject to the approval of the City Engineer of said City, or City Engineer's designated agent.

5. Contract Price:

City shall pay, and Contractor shall accept in full payment for the work above agreed to be done, an amount not to exceed _____ **and XX/100ths Dollars ($_____.__).** Said amount shall be paid in installments as hereinafter provided.

6. Time For Performance:

The time fixed for the commencement of such work is within ten (10) working days after the "Notice to Proceed" has been issued. The contract shall be substantially complete before the expiration of **Three Hundred (300)** working days beginning on the first day of work or no later than the tenth day after the "Notice to Proceed" has been issued. Final completion shall be attained within **Three Hundred Thirty (330)** working days beginning on the first day of work or no later than the tenth day after the "Notice to Proceed" has been issued.*(ADDENDUM 2)*

7. Rights Of City To Increase Working Days:

If such work is not completed within such time, the City Engineer shall have the right to increase the number of working days in the amount the City Engineer may determine will best serve the interests of the City, and if the City Engineer desires to increase said number of working days, the City Engineer shall have the further right to charge the Contractor and deduct from the final payment for the work the actual cost of engineering, inspection, superintendence, and other overhead expenses which are directly chargeable to Contractor, and which accrue during the period of such extension, except that the cost of the final service and preparation of the final estimates shall not be included in such charges; provided, however, that no extension of time for completion of such work shall ever be allowed unless requested by Contractor at least twenty (20) calendar days prior to the time herein fixed for the completion thereof, in writing, with the City Engineer. In this connection, it is understood that the City Engineer shall not consider any such requests if not filed within the time herein prescribed.

8. Option Of City To Terminate Agreement In Event Of Failure To Complete Work:

If Contractor shall have refused or failed to prosecute the work, or any severable part thereof, with such diligence as will ensure its completion within the time specified or any extensions thereof, or shall have failed to complete said work within such time if Contractor should be adjudged a bankrupt, or if Contractor should make a general assignment for the benefit of Contractor's creditors, or if a receiver should be appointed in the event of Contractor's insolvency, or if Contractor or any subcontractor should violate any of the provisions of this Agreement, the City Engineer or the City Council may give written notice to Contractor and Contractor's sureties of its intention to terminate this Agreement, and unless within five (5) days after the serving of such notice such violation shall cease and satisfactory arrangements for the correction thereof made, this Agreement may, at the option of City, upon the expiration of said time, cease and terminate.

9. Delay Damages:

In the event the Contractor, for any reason, shall have failed to perform the work herein specified to the satisfaction of the City Engineer within the time herein required, the City may, in accordance with Section 7203 of the Public Contract Code, in lieu of any other of its rights authorized by paragraph 8 of this Agreement, deduct from payments or credits due Contractor after such breach, a sum equal to **Two Thousand Five Hundred** and no/100ths Dollars **($2500.00)** for each calendar day beyond the date herein provided for Substantial Completion. After Substantial Completion has been achieved, the City may deduct **Eight Hundred** no/100ths Dollars **($800.00)** for each calendar day beyond the date herein provided for Final Completion. This deduction shall not be considered a penalty but shall be considered as delay damages. The aforementioned rate of deduction is an amount agreed to by the Contractor and the City as reasonably representing additional construction engineering costs incurred by the City if the Contractor fails to complete the work within the contract time. However, any deduction assessed as delay damages shall not relieve the Contractor from liability for any damages or costs resulting from delays to other contractors on the project or other projects caused by a failure of the assessed Contractor to complete the work within the contract time. Due account shall be taken of any time extensions granted to the Contractor by the City. Permitting the Contractor to continue work beyond the contract completion date shall not operate as a waiver on the part of the City of any of its rights under the contract nor shall it relieve the Contractor from liability for any damages or costs resulting from delays to other contractors on the project or other projects caused by a failure of the assessed Contractor to complete the work within the contract time.

10. Performance By Sureties:

In the event of any termination as hereinbefore provided, City shall immediately give written notice thereof to Contractor and Contractor's sureties, and the sureties shall have the right to take over and perform the Agreement; provided, however, that if the sureties within five (5) days after giving them said notice of termination, do not give the City written notice of their intention to take over the performance of the Agreement and do not commence performance thereof within five (5) days after notice to the City of such election, City may take over the work and prosecute the same to completion by contract or by any other method it may deem advisable for the account, and at the expense of Contractor and the sureties shall be liable to City for any excess cost or damages occasioned City thereby; and, in such event, City may, without liability for so doing, take possession of and utilize in completing the work such materials, appliances, plant and other property belonging to Contractor as may be on the site of the work and necessary therefor.

11. Disputes Pertaining To Payment For Work:

Should any dispute arise respecting the true value of any work done, of any work omitted, or of any extra work which Contractor may be required to do, or respecting the size of any payment to Contractor during the performance of this contract, such dispute shall be decided by the City Engineer, and the decision of the latter shall be final and conclusive.

12. Permits, Compliance With Law:

Contractor shall, at Contractor's expense, obtain all necessary permits and licenses for the construction of each improvement, give all necessary notices and pay all fees and taxes required by law, except those City fees set forth in the Special Provisions Section 1.

13. Superintendence By Contractor:

Contractor shall give personal superintendence to the work on said improvement or have a competent foreman or superintendent satisfactory to the City Engineer on the work at all times during progress, with authority to act for him.

14. Inspection By City:

Contractor shall at all times maintain proper facilities and provide safe access for inspection by City to all parts of the work and to the shops wherein the work is in preparation.

15. Extra And/Or Additional Work And Changes:

Should City at any time during the progress of said work request any alterations, deviations, additions, or omissions from said specifications or plans or other contract documents, it shall be at liberty to do so, and the same shall in no way affect or make void the contract, but will be added to or deducted from the amount of said contract price as the case may be, by fair and reasonable valuation. Request for such change must be made in writing signed by the City Engineer, shall be accompanied by plans and specifications for such purpose, shall be accepted in writing by Contractor and Contractor's surety.

In the event work is performed or materials furnished in addition to those set forth in Contractor's bid and the specifications herein, said work and materials shall be paid for at the unit price therein contained. Said amount shall be paid in installments as hereinafter provided.

16. Change Of Contract Price:

The contract price may only be changed by a contract change order. The value of any work covered by a contract change order for an adjustment in the contract price will be determined in the City's sole discretion as follows:

(a) If the work performed is on the basis of unit prices contained in the contract documents, the change order will be determined in accordance with the provisions in Section 4-1.05, "Changes and Extra Work", of the Caltrans Standard Specifications; or

(b) If the work performed is not included on the engineers estimate associated with a unit price, the change order will be by a mutually agreed lump sum; or

(c) If the change order is not determined as described above in either 16 (a) or 16 (b), the change order will be determined on the basis of force account in accordance with the provisions below.

FORCE ACCOUNT

For work paid by force account, the Engineer compares the City's records to the Contractor's daily force account work report. When the Engineer and the Contractor agree on the contents of the daily force account work reports, the Engineer accepts the report and the City pays for the work. If the records differ, the City pays for the work based only on the information shown on the City's records.

If a subcontractor performs work at force account, accept an additional 2 percent markup to the total cost of that work paid at force account, including markups specified as below, as reimbursement for additional administrative costs.

The markups specified in labor, materials, and equipment includes compensation for all delay costs, overhead costs, and profit.

If an item's unit price is adjusted for work-character changes, the City excludes the Contractors cost of determining the adjustment.

Payment for owner-operated labor and equipment is made at the market-priced invoice submitted.

Labor

Labor payment is full compensation for the cost of labor used in the direct performance of the work plus a 5 percent markup. Force account labor payment consists of:

1. Employer payment to the worker for:
    1.1. Basic hourly wage
    1.2. Health and welfare
    1.3. Pension
    1.4. Vacation
    1.5. Training
    1.6. Other State and federal recognized fringe benefit payments
2. Labor surcharge percentage in *Labor Surcharge and Equipment Rental Rates* current during the work paid at force account for:
    2.1. Workers' compensation insurance
    2.2. Social security
    2.3. Medicare
    2.4. Federal unemployment insurance
    2.5. State unemployment insurance
    2.6. State training taxes
3. Subsistence and travel allowances paid to the workers
4. Employer payment to supervisors, if authorized

The 5 percent markup consists of payment for all overhead costs related to labor but not designated as costs of labor used in the direct performance of the work including:

1. Home office overhead

2. Field office overhead
3. Bond costs
4. Profit
5. Labor liability insurance
6. Other fixed or administrative costs that are not costs of labor used in the direct performance of the work

Materials

Material payment is full compensation for materials the Contractor furnishes and uses in the work. The Engineer determines the cost based on the material purchase price, including delivery charges, except:

1. A 5 percent markup is added
2. Supplier discounts are subtracted whether the Contractor takes them or not
3. If the Engineer believes the material purchase prices are excessive, the City pays the lowest current wholesale price for a similar material quantity
4. If the Contractor procured the materials from a source the Contractor wholly or partially own, the determined cost is based on the lower of the:
   4.1. Price paid by the purchaser for similar materials from that source on Contract items
   4.2. Current wholesale price for those materials
5. If the Contractor does not submit a material cost record within 30 days of billing, the determined cost is based on the lowest wholesale price:
   5.1. During that period
   5.2. In the quantities used

Equipment Rental

Equipment rental payment is full compensation for:

1. Rental equipment costs, including moving rental equipment to and from the change order work site using its own power.
2. Transport equipment costs for rental equipment that cannot be transported economically using its own power. No payment is made during transport for the transported equipment.
3. 5 percent markup.

If the Contractor wants to return the equipment to a location other than its original location, the payment to move the equipment must not exceed the cost of returning the equipment to its original location. If the Contractor uses the equipment for work other than work paid by force account, the transportation cost is included in the other work.

Before moving or loading the equipment, obtain authorization for the equipment rental's original location.

The Engineer determines rental costs:

1. Using rates in *Labor Surcharge and Equipment Rental Rates*:
   1.1. By classifying equipment using manufacturer's ratings and manufacturer-approved changes.
   1.2. Current during the work paid by force account.
   1.3. Regardless of equipment ownership; but the City uses the rental document rates or minimum rental cost terms if:
      1.3.1. Rented from equipment business the Contractor does not own.
      1.3.2. The Labor Surcharge and Equipment Rental Rates hourly rate is $10.00 per hour or less.
2. Using rates established by the Engineer for equipment not listed in *Labor Surcharge and Equipment Rental Rates*. The Contractor may submit cost information that helps the Engineer establish the rental rate; but the City uses the rental document rates or minimum rental cost terms if:
   2.1. Rented from equipment business the Contractor does not own.
   2.2. The Engineer establishes a rate of $10.00 per hour or less.
3. Using rates for transport equipment not exceeding the hourly rates charged by established haulers.

Equipment rental rates include the cost of:

1. Fuel
2. Oil
3. Lubrication
4. Supplies
5. Small tools that are not consumed by use
6. Necessary attachments
7. Repairs and maintenance
8. Depreciation
9. Storage
10. Insurance
11. Incidentals

The City pays for small tools consumed by use. The Engineer determines payment for small tools consumed by use based on Contractor-submitted invoices.

The Engineer may authorize rates in excess of those in the *Labor Surcharge and Equipment Rental Rates* if:

1. The Contractor submits a request to use rented equipment
2. Equipment is not available from the Contractors normal sources or from one of the Contractors subcontractors
3. Rented equipment is from an independent rental company
4. Proposed equipment rental rate is reasonable
5. The Engineer authorizes the equipment source and the rental rate before the Contractor uses the equipment

Equipment on the Job Site

For equipment on the job site at the time required to perform work paid by force account, the time paid is the time:

1. To move the equipment to the location of work paid by force account plus an equal amount of time to move the equipment to another location on the job site when the work paid by force account is completed

2. To load and unload equipment
3. Equipment is operated to perform work paid by force account and:
   3.1. Hourly rates are paid in 1/2-hour increments
   3.2. Daily rates are paid in 1/2-day increments

Equipment Not On the Job Site Required for Original-Contract Work

For equipment not on the job site at the time required to perform work paid by force account and required for original-Contract work, the time paid is the time the equipment is operated to perform work paid by force account and the time to move the equipment to a location on the job site when the work paid by force account is completed.

The minimum total time paid is:

1. 1 day if daily rates are paid
2. 8 hours if hourly rates are paid

If daily rates are recorded, equipment:

1. Idled is paid as 1/2 day
2. Operated 4 hours or less is paid as 1/2 day
3. Operated 4 hours or more is paid as 1 day

If the minimum total time exceeds 8 hours and if hourly rates are listed, the City rounds up hours operated to the nearest 1/2-hour increment and pays based on the hours shown the following table. The table does not apply when equipment is not operated due to breakdowns, in which case rental hours are the hours the equipment was operated.

Equipment Rental Hours

Hours operated	Hours paid
0.0	4.00
0.5	4.25
1.0	4.50
1.5	4.75
2.0	5.00
2.5	5.25
3.0	5.50
3.5	5.75
4.0	6.00
4.5	6.25
5.0	6.50
5.5	6.75
6.0	7.00
6.5	7.25
7.0	7.5
7.5	7.75
≥8.0	hours used

Equipment Not On the Job Site Not Required for Original-Contract Work

For equipment not on the job site at the time required to perform work paid by force account and not required for original-Contract work, the time paid is the time:

1. To move the equipment to the location of work paid by force account plus an equal amount of time to return the equipment to its source when the work paid by force account is completed
2. To load and unload equipment
3. Equipment is operated to perform work paid by force account

Non-Owner-Operated Dump Truck Rental

Submit the rental rate for non-owner-operated dump truck rental. The Engineer determines the payment rate. Payment for non-owner-operated dump truck rental is for the cost of renting a dump truck, including its driver. For the purpose of markup payment only, the non-owner-operated dump truck is rental equipment and the owner is a subcontractor.

The above markups shall constitute full compensation for all home office overhead, field office overhead, bond costs, profit, labor liability insurance, and other fixed or administrative costs that are not costs specifically designated as cost or equipment rental as stated above. The total payment made as provided above shall be deemed to be the actual cost of the work and shall constitute full compensation therefor.

When extra work to be paid for on a force account basis is performed by a subcontractor, approved in conformance with the provisions in Section 5-1.13, "Subcontracting," an additional markup of 2 percent will be added to the total cost of that extra work including all markups specified in this Section. The additional 2 percent markup shall reimburse the Contractor for additional administrative costs, and no other additional payment will be made by reason of performance of the extra work by a subcontractor.

17. Change Of Contract Time:

The contract time may only be changed by a contract change order. The value of any work covered by a contract change order for an adjustment in the contract time will be determined as follows:

(a) Additional working days will be awarded where the amount of time is mutually agreed upon by Contractor and Engineer; or

(b) Additional working days will be awarded where Contractor is prevented from completing any part of the work identified on the critical path and:

a. where the delay is caused by acts of public enemy, fire, floods, tsunamis, earthquakes, epidemics, quarantine restrictions, strikes, labor disputes, shortage of materials and freight embargos, provided that Contractor shall notify Engineer in writing of the causes of delay within 15 days from the beginning of that delay; or

b. where the delay is caused by actions beyond the control of Contractor; or

c. where the delay is caused by actions or failure to act by Engineer.

Contractor shall not be entitled to an adjustment in contract time for delays within the control of Contractor. Delays resulting from and within the control of a Subcontractor or Supplier shall be deemed to be delays within the control of Contractor.

18. Inspection And Testing Of Materials:

Contractor shall notify City a sufficient time in advance of the manufacture of production materials to be supplied by Contractor under this contract in order that City may arrange for mill or factory inspection and testing of same.

Any materials shipped by Contractor from factory prior to having satisfactorily passed such testing and inspection by City's representative or prior to the receipt of notice from such representative that such testing and inspection will not be required shall not be incorporated on the job of said improvement. Contractor shall also furnish City, in triplicate, certified copies of all factory and mill test reports upon request.

19. Permits And Care Of The Work:

Contractor has examined the site of the work and is familiar with its topography and condition, location of property lines, easements, building lines, and other physical factors and limitations affecting the performance of this Agreement. Contractor, at Contractor's expense, shall obtain any permission necessary for any operations conducted off the property owned or controlled by City. Contractor shall be responsible for the proper care and protection of all materials delivered and work performed until completion and final acceptance.

20. Other Contracts:

City may award other contracts for additional work, and Contractor shall fully cooperate with such other Contractors and carefully fit Contractor's own work to that provided under other contracts as may be directed by the City Engineer. Contractor shall not commit or permit any act which will interfere with the performance of work by any other Contractor.

21. Payments To Contractor:

Payments are to be made to the Contractor in accordance with the provisions of Section 9 of the General Conditions of said specifications in legally executed and regularly issued warrants of the city, drawn on the appropriate fund or funds as required by law and order of the City Council thereof. The Contractor shall be administered a progress payment approximately every 30 calendar days from the time work begins according to the payment schedule furnished by the City Engineer at the time work begins.

Pursuant to Division 2, Part 5, Section 22300, *et seq.*, of the Public Contracts Code, the Contractor may request the right to substitute securities for any moneys withheld by the City of Turlock to ensure the performance required of the Contractor under the contract, or that the City of Turlock make payment of retentions earned directly into an escrow account established at the expense of the Contractor.

22. Contract Security:

Concurrently with the execution hereof, Contractor shall furnish on the forms provided (1) a surety bond in an amount equal to at least one hundred percent (100%) of the contract price as security for the faithful performance of this contract; and (2) a separate surety bond in an amount equal to at least one hundred percent (100%) of the contract price as security for the payment of all persons performing labor and furnishing materials in connection with this contract. Sureties on each of said bonds thereof shall be satisfactory to the City.

23. Indemnification:

Indemnity for Professional Liability: When the law establishes a professional standard of care for Contractor's Services, to the fullest extent permitted by law, Contractor shall indemnify, protect, defend, and hold harmless City and any and all of its elective and appointive boards, officers, officials, agents, employees or volunteers from and against any and all losses, liabilities, damages, costs, and expenses, including legal counsel's fees and costs but only to the extent the Contractor (and its Subcontractors) are responsible for such damages, liabilities and costs on a comparative basis of fault between the Contractor (and its Subcontractors) and the City in the performance of professional services under this Agreement. Contractor shall not be obligated to defend or indemnify City for the City's own negligence or for the negligence of others.

Indemnity for other than Professional Liability: Other than in the performance of professional services and to the full extent permitted by law, Contractor shall indemnify, defend, and hold harmless City and any and all of its elective and appointive boards, officers, officials, agents, employees or volunteers from and against any liability (including liability for claims, suits, actions, arbitration proceedings, administrative proceedings, regulatory proceedings, losses, expenses or costs of any kind, whether actual, alleged or threatened, including legal counsel's fees and costs, court costs, interest, defense costs, and expert witness fees), where the same arise out of, are a consequence of, or are in any way attributable to, in whole or in part, the performance of this Agreement by Contractor or by any individual or agency for which Contractor is legally liable, including, but not limited to, officers, agents, employees, or subcontractors of Contractor.

24. Contractor's Insurance:

Contractor shall not commence work under this Agreement until Contractor has obtained City's approval regarding all insurance requirements, forms, endorsements, amounts, and carrier ratings, nor shall Contractor allow any subcontractor to commence work on a subcontract until all similar insurance required of the subcontractor shall have been so obtained and approved. Contractor shall procure and maintain for the duration of this Agreement insurance against claims for injuries to persons or damages to property which may arise from or in connection with the performance of the work hereunder by Contractor, its agents, representatives, employees or subcontractors. Failure to maintain or renew coverage or to provide evidence of renewal may constitute a material breach of contract.

(a) Minimum Scope of Insurance: Coverage shall be at least as broad as:

(1) Insurance Services Office Commercial General Liability coverage (occurrence Form CG 00 01) with additional insured endorsements (form CG 20 10 for ongoing operations and CG 20 37 for products/completed operations), to be approved by the City of Turlock.

(2) Insurance Services Office Form CA 00 01 covering Automobile Liability, Code 1 (any auto).

(3) Workers' Compensation insurance as required by the State of California and Employer's Liability Insurance.

(4) Insurance Service Office Form CP 00 20 with Causes of Loss – Special Form CP 10 30 covering Builder's Risk (Course of Construction) insurance covering all risks of loss less policy exclusions.

(5) Surety bonds as described below.

(6) Errors and Omissions/Professional Liability Insurance (if *Design/Build*).

(b) Minimum Limits of Insurance: Contractor shall maintain limits no less than:

(1) General Liability (including operations, products and completed operations): $1,000,000 per occurrence for bodily injury, personal injury and property damage. If Commercial General Liability Insurance or other form with a general aggregate limit is used, either the general aggregate limit shall apply separately to this project/location or the general aggregate limit shall be twice the required occurrence limit.

(2) Automobile Liability: $1,000,000 per occurrence for bodily injury and property damage.

(3) Workers' Compensation: As statutorily required by the State of California.

(4) Employer's Liability: $1,000,000 per accident for bodily injury or disease.

(5) Builder's Risk: Completed value of the project with no coinsurance penalty provisions.

(6) Errors and Omissions/Professional Liability: $1,000,000 per claim as needed for design/build.

(c) Deductibles and Self-Insured Retentions: Upon request of City, any deductibles or self-insured retentions must be declared to and approved by City. At the option of City, either: (1) the insurer shall reduce or eliminate such deductibles or self-insured retentions as respects City, its elective and appointive boards, officers, agents,

employees, and volunteers; or (2) Contractor shall provide a financial guarantee satisfactory to City guaranteeing payment of losses and related investigations, claim administration and defense expenses.

(d) Other Insurance Provisions: The commercial general liability policy shall contain, or be endorsed to contain, the following provisions:

(1) City, its elective and appointive boards, officers, agents, employees, and volunteers are to be covered as additional insureds with respect to liability arising out of work or operations performed by or on behalf of Contractor, including materials, parts or equipment furnished in connection with such work or operations, which coverage shall be maintained in effect for at least three (3) years following the completion of the work specified in the contract. General liability coverage can be provided in the form of an endorsement to Contractor's insurance (at least as broad as CG 20 10 for ongoing operations and CG 20 37 for products/completed operations), or as a separate Owners and Contractors Protective Liability policy providing both ongoing operations and completed operations coverage.

(2) For any claims related to this project, Contractor's insurance coverage shall be primary insurance as respects City and any insurance or self-insurance maintained by City shall be excess of Contractor's insurance and shall not contribute with it.

(3) In the event of cancellation, non-renewal, or material change that reduces or restricts the insurance coverage afforded to City under this Agreement, the insurer, broker/producer, or Contractor shall provide City with thirty (30) days' prior written notice of such cancellation, non-renewal, or material change.

(4) Coverage shall not extend to any indemnity coverage for the active negligence of the additional insured in any case where an agreement to indemnify the additional insured would be invalid under Subdivision (b) of Section 2782 of the Civil Code.

(e) Builder's Risk (Course of Construction) Insurance: City shall be named as loss payee.

(f) Acceptability of Insurers: Insurance is to be placed with insurers with a current A.M. Best's rating of no less than A:VII or with an insurer to which the City has provided prior approval.

(g) Verification of Coverage: Consultant shall furnish City with original certificates and amendatory endorsements or copies of the applicable policy language effecting coverage required by this clause. All certificates and endorsements are to be received and approved by City before work commences. However, failure to obtain the required documents prior to the work beginning shall not waive Contractor's obligation to provide them. City reserves the right, at any time, to require complete, certified copies of all required insurance policies and endorsements.

(h) Waiver of Subrogation: With the exception of professional liability, Contractor hereby agrees to waive subrogation which any insurer of Contractor may acquire from Contractor by virtue of the payment of any loss. The commercial general liability policy and workers' compensation policy shall be endorsed to contain a waiver of subrogation in favor of City for all work performed by Contractor, its agents, employees, independent contractors and subcontractors. Contractor agrees to obtain any endorsement that may be necessary to effect this waiver of subrogation.

(i) Subcontractors: Contractor shall include all subcontractors as insureds under its policies or shall furnish separate certificates and endorsements for each subcontractor. All coverages for subcontractors shall be subject to all of the requirements stated herein.

(j) Surety Bonds: Contractor shall provide a Performance Bond and a Payment Bond.

25. Proof Of Carriage Of Insurance:

Contractor shall furnish City concurrently with the execution hereof, satisfactory proof of carriage of the insurance required, and that Contractor shall give City at least sixty (60) days prior notice of the cancellation of any policy during the effective period of this contract.

26. Wages & Hours Of Employment:

In the performance of this contract, eight (8) hours shall be the maximum hours of labor on any calendar day, and the minimum wages of compensation of persons performing labor in the execution of this Agreement shall be the current prevailing scale of wages determined by the Director of the Department of Industrial Relations for the community.

The Contractor shall forfeit as penalty to the City, Twenty-five and no/100ths Dollars ($25.00) to be paid to the City of Turlock for each workman employed in the execution of this Agreement by him or by any subcontractor, for each calendar day during which any workman is required or permitted to labor more than eight (8) hours, in violation of provisions of Article 3, Chapter 1, Part 7, a Division 2, of the Labor Code of the State of California, and all amendments thereto.

27. Emergency - Additional Time For Performance - Procurement Of Materials:

If, because of war or other declared national emergency, the Federal or State Government restricts, regulates, or controls the procurement and allocation of labor or materials, or both, and if solely because of said restrictions, regulations or controls, Contractor is through no fault of the Contractor, unable to perform this Agreement, or the work is thereby suspended or delayed, any of the following steps may be taken.

(a) City may, pursuant to resolution of the Council, grant Contractor additional time for the performance of this Agreement, sufficient to compensate in time, for delay or suspension.

To qualify for such extension in time, Contractor within ten (10) days of Contractor's discovering such inability to perform, shall notify City Engineer in writing thereof, and give specific reasons therefore; City Engineer shall thereupon have sixty (60) days within which to procure such needed materials or labor as is specified in this Agreement, or permit substitution, or provide for changes in the work in accordance with other provisions of this Agreement.

Substituted materials, or changes in the work, or both, shall be ordered in writing by City Engineer, and the concurrence of the Council shall not be necessary. All reasonable expenses of such procurement incurred by the City Engineer shall be defrayed by the Contractor; or

(b) If such materials or labor cannot be procured through legitimate channels within sixty (60) days after the filing of the aforesaid notice, either party may, upon thirty (30) days' written notice to the other, terminate this Agreement. In such event, Contractor shall be compensated for all work executed upon a unit basis in proportion to the amount of the work completed, or upon a cost-plus-ten-percent (10%) basis, whichever is the lesser. Materials on the ground, in process of fabrication or in route upon the date of notice of termination specially ordered for the project and which cannot be utilized by Contractor, shall be compensated for by City at cost, including freight, provided the Contractor shall take all steps possible to minimize this obligation; or

(c) City Council, by resolution, may suspend this Agreement until the cause of inability to perform is removed but for a period of not to exceed sixty (60) days.

If this Agreement is not canceled, and the inability of Contractor to perform continues without fault on Contractor's part, beyond the time during which the Agreement may have been suspended, as herein above provided, City Council may further suspend this Agreement, or either party hereto may, without incurring any liability, elect to declare this Agreement terminated upon the ground of impossibility of performance. In the event City declares this Agreement terminated, such declaration shall be authorized by the City Council by resolution, and Contractor shall be notified in writing thereof within five (5) days after the adoption of such resolution. Upon such termination, Contractor shall be entitled to proportionate compensation at the Agreement rate for such portion of the Agreement as may have been performed, or

(d) City may terminate this Agreement, in which case Contractor shall be entitled to proportionate compensation at the agreed rate for such portion of the Agreement as may have been performed. Such termination shall be authorized by resolution of the Council. Notice thereof shall be forthwith given in writing to Contractor, and this Agreement shall be terminated upon receipt by Contractor of such notice.

In the event of the termination provided in this sub-paragraph (d), none of the covenants, conditions or provisions hereof shall apply to the work not performed, and

City shall be liable to Contractor for the proportionate compensation last herein mentioned.

28. Provisions Cumulative:

The provisions of this Agreement are cumulative, and in addition to and not in limitation of, any other rights or remedies available to City.

29. Taxes:

Contractor shall cooperate with City to the full extent possible to maximize the local allocation of California sales and use tax to the City. Such cooperation shall include but not be limited to:

(a) Use Tax Direct Payment Permits. Contractor shall apply for, obtain and utilize, to the maximum extent reasonable, a California Use Tax Direct Payment Permit.

(b) Purchases of $500,000 or More. Contractor shall require vendors and suppliers located outside California from whom Contractor makes purchase of $500,000 or more to allocate the use tax to the City.

Additional information regarding use tax and the Permit can be found in the State of California Board of Equalization, Sales and Use Tax Regulations, Regulation 1699.6, Use Tax Direct Payment Permits, or on the web site for the Board of Equalization at http://www.boe.ca.gov/sutax/sutprograms.htm

30. Notices:

All notices shall be in writing and delivered in person or transmitted by certified mail, postage prepaid.

Notices required to be given to City shall be addressed as follows:

City of Turlock
City Engineer
156 S. Broadway, Suite 150
Turlock, CA 95380-5454

Notices required to be given to Contractor shall be addressed as follows:

_____
_____
_____

Notices required to be given sureties of Contractor shall be addressed as follows:

_____
_____
_____
_____

31. CITY CONTRACT ADMINISTRATOR:

The City's contract administrator and contact person for this Agreement is:

Stephen Fremming
City of Turlock Engineering Division
156 S. Broadway, Suite 150
Turlock, California 95380-5456
Telephone: (209) 668-5417
E-mail: sfremming@turlock.ca.us

32. Interpretation:

As used herein, any gender includes each other gender, the singular includes the plural and vice versa.

33. Antitrust Claims:

The Contractor or subcontractor offers and agrees to assign to the City all rights, title and interest to any causes of action under Section Four of the Clayton Act and the Cartwright Act concerning antitrust claims.

34. Use of City Project Number:

The Contractor or subcontractor agrees to use the aforementioned City project number on all maps, drawings, submittals, billing, and written correspondence that involve City staff or contracted consultants. Nothing in this section shall preclude the Contractor or subcontractor from using their own project numbers for their own internal use.

IN WITNESS WHEREOF, three identical counterparts of this Agreement, consisting of a total of 19 pages, each of which counterparts shall for all purposes be deemed an original of said Agreement, have been duly executed by the parties hereinabove named, on the day and year first herein above written.

CONTRACTOR

By: _____

_____
Print Name

Address:_____
_____
_____

Phone: _____
Date: _____

Federal Tax ID or Social Security No:
_____

Attach Contractor's Seal Here

CITY OF TURLOCK, a municipal corporation

By: _____
Gary Soiseth, Mayor

or

_____
Gary R. Hampton, City Manager

Date: _____

APPROVED AS TO SUFFICIENCY:

By: _____
Michael G. Pitcock, P.E., Development Services Director / City Engineer

APPROVED AS TO FORM:

By: _____
Phaedra A. Norton, City Attorney

ATTEST:

By: _____
Jennifer Land, City Clerk

END OF SECTION

CONFORMED

SECTION 00 85 00

BOND FOR FAITHFUL PERFORMANCE

KNOW ALL BY THESE PRESENTS:

That _____, as Principal, and _____, incorporated under the laws of the State of _____, and authorized to execute bonds and undertakings as sole Surety, in the State of California, and held and firmly bound unto the City of Turlock, a municipal corporation of the State of California, in the sum of _____Dollars ($_____) for the payment thereof, well and truly to be made, said Principal and Surety bind themselves, their administrators, successors and assigns, jointly and severally, firmly by these presents.

The condition of the foregoing obligation is such that: Whereas the above bounden Principal has entered, or is about to enter, into a certain contract with the City of Turlock, entitled "Agreement for **City Project No. 12-60C, "Turlock Regional Transit Center Phase 2 ,"** a true and correct copy of which agreement is presently on file in the office of the City Clerk of the City of Turlock, which said agreement is hereby referred to and made a part hereof.

NOW, THEREFORE, if the above bounden Principal shall well and truly perform the work contracted to be performed under said contract, then this obligation shall be void, otherwise to remain in full force and effect.

No prepayment or delay in payment and no changes, extension, addition or alteration of any provision of said contract or in any plans and specifications referred to herein, and no forbearance on the part of the City shall operate to release the Surety from liability on this Bond, and consent to make such alterations without further notice to or consent by the Surety is hereby given, and the Surety hereby waives the provisions of Section 2819 of the Civil Code of the State of California.

///

///

///

///

///

///

Dated this _____day of _____, 20__.

_____
(Principal)
By: X_____

By: X_____

_____
(Surety)
By: X_____

By: X_____

Address:_____

_____
(Zip)
Phone:_____

(Attach Acknowledgment
Both Principal's and Surety's
Attorney In Fact)

///

///

///

///

///

///

///

///

END OF SECTION

CONFORMED

SECTION 00 86 00

BOND FOR LABOR AND MATERIAL

KNOW ALL BY THESE PRESENTS:

That _____, as Principal, and _____, incorporated under the laws of the State of _____ and authorized to execute bonds and undertakings as sole Surety, in the State of California, as Surety, are held and firmly bound unto any and all material, men, persons, companies or corporations furnishing materials, provisions, provender or other supplies used in, upon, for or about the performance of the work contracted to be executed or performed under the contract hereinafter mentioned, and all persons, companies or corporations renting or hiring teams, or implements or machinery, for or contributing to said work to be done, and all persons who perform work or labor upon the same, and all persons who supply both work and materials, and whose claim has not been paid by the Contractor, company, or corporations in the just and full sum of_____ Dollars ($_____) for payment thereof, well and truly to be made, said Principal and Surety bind themselves, their administrators, successors and assigns, jointly and severally, firmly by these presents.

The condition of the foregoing obligation is such that: Whereas the above bounden Principal has entered, or is about to enter, into a certain contract with the City of Turlock, entitled "Agreement for **City Project No. 12-60C, "Turlock Regional Transit Center Phase 2 ,"** a true and correct copy of which agreement is presently on file in the office of the City Clerk of the City of Turlock, which said agreement is hereby referred to and made a part hereof.

NOW, THEREFORE, if the above bounden Principal or said Principal's subcontractors, fail to pay for any materials, provisions provender or other supplies, or teams, used in, upon, for, or about the performance of the work contracted to be done, or for any work or labor thereon of any kind, or for amounts due under the Unemployment Insurance Act with respect to such work or labor, the Surety will pay for the same, in an amount not exceeding the sum specified in this bond, provided that any and all claims hereunder shall be filled and proceedings had in connection therewith as required by the provisions of Sections 5100, et. seq., inclusive, of the Public Contracts Code of the State of California, and any amendments thereof; provided, also, that in case suit is brought upon this bond, a reasonable attorney's fee shall be awarded by the court to the prevailing party in said suit, said attorney's fee to be fixed as costs in said suit, and to be included in the judgment therein rendered.

No prepayment or delay in payment and no change, extension, addition, or alteration of any provision of said contract or in said plans and specifications agreed to between the Principal and the City, and no forbearance on the part of the City, shall operate to release the Surety from liability on this bond, and consent to make such alterations without further notice to or consent by the Surety is hereby given, and the Surety hereby waives the provisions of Section 2819 of the Civil Code of the State of California.

Dated this _____ day of _____, 20__.

_____
(Principal)

By: X_____

By: X_____

_____
(Surety)

By: X_____

By: X_____

Address:_____

_____
(Zip)
Phone:_____

(Attach Acknowledgment
Both Principal's and
Surety's Attorney In Fact)

///

///

///

///

///

END OF SECTION

CONFORMED

SECTION 00 87 00

GUARANTY BOND

Any singular reference to CONTRACTOR, Surety, OWNER or other party shall be considered plural where applicable.

GUARANTEE FOR **[CONTRACTOR]**

CONTRACTOR (Name and Address):

_____

_____

_____

SURETY (Name and Address of Principal Place of Business):

_____

_____

_____

OWNER (Name and Address):

_____

_____

_____

CONSTRUCTION CONTRACT

Date: _____

Amount: _____

Project (Name and Location): _____

_____

(SEAL AND NOTARIAL ACKNOWLEDGMENT OF SURETY)

CONTRACTOR AS PRINCIPAL	SURETY
Company: _____(Corp. Seal)	Company: _____(Corp. Seal)
Signature: _____	Signature: _____
Name and Title:	Name and Title:

We hereby guarantee that all Work performed for the Contract Documents entitled:

City Project 12-60C, "Turlock Regional Transit Center Phase 2"

which we have constructed, have been done in accordance with the Contract Documents, and that the work as constructed will fulfill the requirements of CONTRACTOR's general warranty and guaranties included in the Contract Documents. We agree to perform all work necessary to correct deficiencies, errors or omissions in the workmanship or materials within a period of one (1) year from the date of final acceptance of the above-named work by the OWNER, without any expense whatsoever to said OWNER, ordinary wear and unusual abuse excepted.

As part of the obligation secured hereby and in addition to the face amount specified therefor, there shall be included costs and reasonable expenses and fees, including reasonable attorney's fees, incurred by OWNER.

The Surety hereby stipulates and agrees that no change, extension of time, alteration or addition to the terms of the agreement or to the work to be performed thereunder or the specifications accompanying the same shall in anywise affect its obligations on this bond, and it does hereby waive notice of any such change, extension of time, alteration or addition to the terms of the agreement or to the work or to the specifications.

In the event of our failure to comply with the above-mentioned conditions within ten (10) calendar days after being notified in writing by the OWNER, we collectively or separately, do hereby authorize the OWNER to proceed to have said defects repaired and made good at our expense and we will honor and pay the costs and charges therefore upon demand. When correction work is started, it shall be carried through to completion.

DATED:

END OF SECTION

CONFORMED

SECTION 00 88 00

ESCROW BID DOCUMENTS

1. SCOPE

The lowest Bidder shall submit, within the specified time after receipt of Bids, one copy of all documentary information generated in preparation of Bid prices for this Project. This material is hereinafter referred to as "Escrow Bid Documents." The Escrow Bid Documents of the Successful Bidder will be held in escrow for the duration of the contract.

The Successful Bidder agrees, as a condition of award of the contract, that the Escrow Bid Documents constitute the complete, only, and all documentary information used in preparation of his Bid. No other Bid preparation information shall be considered in resolving disputes.

Nothing in the Escrow Bid Documents shall change or modify the terms or conditions of the Contract Documents.

2. OWNERSHIP

The Escrow Bid Documents are, and shall always remain, the property of CONTRACTOR, subject only to joint review by OWNER and CONTRACTOR, as provided herein.

OWNER stipulates and expressly acknowledges that the Escrow Bid Documents, as defined herein, constitute trade secrets. This acknowledgment is based on OWNER's express understanding that the information contained in the Escrow Bid Documents is not known outside the Bidder's business, is known only to a limited extent and only by a limited number of employees of the Bidder, is safeguarded while in Bidder's possession, is extremely valuable to Bidder, and could be extremely valuable to Bidder's competitors by virtue of it reflecting Bidder's contemplated techniques of construction. OWNER acknowledges that the Bidder expended substantial sums of money in developing the information included in the Escrow Bid Documents and further acknowledges that it would be difficult for a competitor to replicate the information contained therein. OWNER further acknowledges that the Escrow Bid Documents and the information contained therein are made available to OWNER only because such action is an express prerequisite to award of the contract. OWNER further acknowledges that the Escrow Bid Documents include a compilation of information used in the Bidder's business, intended to give the Bidder an opportunity to obtain an advantage over competitors who do not know of or use the contents of the documentation. OWNER agrees to safeguard the Escrow Bid Documents, and all information contained therein, against disclosure to the fullest extent permitted by law.

3. PROGRAM

Escrow Bid Documents will be used to assist in the negotiation of price adjustments and Change Orders and in the settlement of disputes, claims, and other controversies. They will not be used for pre-award evaluation of CONTRACTOR's anticipated methods of construction or to assess CONTRACTOR's qualifications for performing the Work.

4. FORMAT AND CONTENTS

Bidders may submit Escrow Bid Documents in their usual cost estimating format. It is not the intention of this section to cause the Bidder extra work during the preparation of the Bid, but to ensure that the Escrow Bid

Documents will be adequate to enable complete understanding and proper interpretation for their intended use. The Escrow Bid Documents shall be in the language of the Specifications.

The Escrow Bid Documents shall include all quantity takeoffs; crew; equipment; calculations of rates of production and progress; copies of quotations from equipment manufacturers, Subcontractors, and Suppliers; and memoranda, narratives, consultants' reports, add/deduct sheets, and all other information used by the Bidder to arrive at the prices contained in the Bid Form. Estimated costs should be broken down into the Bidder's usual estimate categories, such as direct labor, repair labor, equipment operation, equipment ownership, expendable materials, permanent materials, and subcontract costs as appropriate. Plant and equipment and indirect costs should be detailed in the Bidder's usual format. CONTRACTOR's allocation of plant and equipment, indirect costs, contingencies, markup, and other items to each Bid item shall be included.

Bidding Documents provided by the OWNER should not be included in the Escrow Bid Documents unless needed to comply with the requirements of this section.

5. SUBMITTAL

The Escrow Bid Documents shall be submitted in a sealed container within one week after the time of receipt of Bids. The container shall be clearly marked on the outside with the Bidder's name, date of submittal, project name, and the words "Escrow Bid Documents."

The Escrow Bid Documents shall be accompanied with a certification signed by an individual authorized by the Bidder to execute the Bid Form, stating that the material in the Escrow Documentation constitutes the complete, only, and all documentary information used in preparation of the Bid and that he has personally examined the contents of the Escrow Bid Documents container and has found that the documents in the container are complete.

Prior to award, Escrow Bid Documents of the apparent Successful Bidder will be unsealed, examined, organized, and inventoried by representatives of OWNER, together with members of CONTRACTOR's staff who are knowledgeable in how the Bid was prepared. This examination is to ensure that the Escrow Bid Documents are authentic, legible, and complete. It will not include review of, and will not constitute approval of, proposed construction methods, estimating assumptions, or interpretations of Contract Documents. This examination is subject to the condition that, as trade secrets, the Escrow Bid Documents are proprietary and confidential as described in Paragraph 2. Examination will not alter any condition(s) or term(s) of the contract.

If all the documentation required in Part 4, "Format and Contents," has not been included in the original submittal, additional documentation shall be submitted, at OWNER's discretion, prior to award of the contract. The detailed breakdown of estimated costs shall be reconciled and revised, if appropriate, by agreement between CONTRACTOR and OWNER before making the award.

If the contract is not awarded to the apparent Successful Bidder, the Escrow Bid Documents of the Bidder next to be considered for award shall be processed as described above.

Timely submission of complete Escrow Bid Documents is an essential element of the Bidder's responsibility and a prerequisite to contract award. Failure to provide the necessary Escrow Bid Documents will be sufficient cause for OWNER to reject the Bid.

If the Bidder's proposal is based on subcontracting any part of the Work, each Subcontractor whose total subcontract price exceeds 5 percent of the total Contract Price proposed by the Bidder shall provide separate Escrow Bid Documents to be included with those of the Bidder. These documents will be opened and examined in the same manner and at the same time as the examination described above for the apparent Successful Bidder.

If CONTRACTOR subcontracts any portion of the Work after award, OWNER retains the right to require CONTRACTOR to submit Escrow Bid Documents from the Subcontractor before the subcontract is approved.

Escrow Bid Documents submitted by unsuccessful Bidders will be returned unopened, unless opened as provided above, as soon as they are no longer needed by OWNER and no later than immediately following award of the contract.

6. STORAGE

The Escrow Bid Documents of the Successful Bidder will be placed in escrow prior to award of the contract, for the life of the contract, in a mutually agreeable institution. The cost of storage will be paid by OWNER.

7. EXAMINATION AFTER AWARD OF CONTRACT

The Escrow Bid Documents shall be examined by both OWNER and CONTRACTOR, at any time deemed necessary after award of the contract by either OWNER or CONTRACTOR, to assist in the negotiation of price adjustments and Change Orders, or the settlement of disputes.

Examination of the Escrow Bid Documents after award of the contract is subject to the following conditions:

a. As trade secrets, the Escrow Bid Documents are proprietary and confidential as described in Paragraph 2.

b. OWNER and CONTRACTOR shall each designate, in writing to the other party and a minimum of 10 days prior to examination, representatives who are authorized to examine the Escrow Bid Documents. No other person shall have access to the Escrow Bid Documents.

c. Access to the Escrow Bid Documents will take place only in the presence of duly designated representatives of both OWNER and CONTRACTOR.

8. FINAL DISPOSITION

The Escrow Bid Documents will be returned to CONTRACTOR at such time as the contract has been completed and final settlement has been achieved.

END OF SECTION

SECTION 00 90 00

SPECIAL PROVISIONS – FEDERAL TRANSIT ADMINISTRATION CLAUSES

This project is funded, in part, using funds from the Federal Transit Administration (FTA). Applicable contract clauses are as follows:

1. **Buy America**

   The contractor agrees to comply with 49 U.S.C. 5323(j) and 49 C.F.R. Part 661, which provide that Federal funds may not be obligated unless steel, iron, and manufactured products used in FTA-funded projects are produced in the United States, unless a waiver has been granted by FTA or the product is subject to a general waiver. General waivers are listed in 49 C.F.R. 661.7, and include final assembly in the United States for 15 passenger vans and 15 passenger wagons produced by Chrysler Corporation, and microcomputer equipment and software. Separate requirements for rolling stock are set out at 49 U.S.C. 5323(j)(2)(C) and 49 C.F.R. 661.11. Rolling stock must be assembled in the United States and have a 60 percent domestic content.

   A bidder or offeror must submit to the FTA recipient the appropriate Buy America certification (below) with all bids or offers on FTA-funded contracts, except those subject to a general waiver. Bids or offers that are not accompanied by a completed Buy America certification must be rejected as nonresponsive. This requirement does not apply to lower tier subcontractors.

Certification requirement for procurement of steel, iron, or manufactured products.

Certificate of Compliance with 49 U.S.C. 5323(j)(1)

The bidder or offeror hereby certifies that it will meet the requirements of 49 U.S.C. 5323(j)(1) and the applicable regulations in 49 CFR Part 661.5.

Date _____

Signature_____

Company Name_____

Title _____

Certificate of Non-Compliance with 49 U.S.C. 5323(j)(1)

The bidder or offeror hereby certifies that it cannot comply with the requirements of 49 U.S.C. 5323(j)(1) and 49 C.F.R. 661.5, but it may qualify for an exception pursuant to 49 U.S.C. 5323(j)(2)(A), 5323(j)(2)(B), or 5323(j)(2)(D), and 49 C.F.R. 661.7.

Date _____

Signature _____

Company Name _____

Title _____

2. Seismic Safety

The contractor agrees that any new building or addition to an existing building will be designed and constructed in accordance with the standards for Seismic Safety required in Department of Transportation Seismic Safety Regulations 49 CFR Part 41 and will certify to compliance to the extent required by the regulation. The contractor also agrees to ensure that all work performed under this contract including work performed by a subcontractor is in compliance with the standards required by the Seismic Safety Regulations and the certification of compliance issued on the project.

3. Energy Conservation

The contractor agrees to comply with mandatory standards and policies relating to energy efficiency which are contained in the state energy conservation plan issued in compliance with the Energy Policy and Conservation Act.

4. Clean Water

(1) The Contractor agrees to comply with all applicable standards, orders or regulations issued pursuant to the Federal Water Pollution Control Act, as amended, 33 U.S.C. 1251 et seq . The Contractor agrees to report each violation to the Purchaser and understands and agrees that the Purchaser will, in turn, report each violation as required to assure notification to FTA and the appropriate EPA Regional Office.

(2) The Contractor also agrees to include these requirements in each subcontract exceeding $100,000 financed in whole or in part with Federal assistance provided by FTA.

5. Lobbying

Contractors who apply or bid for an award of $100,000 or more shall file the certification required by 49 CFR part 20, "New Restrictions on Lobbying." Each tier certifies to the tier above that it will not and has not used Federal appropriated funds to pay any person or organization for influencing or attempting to influence an officer or employee of any agency, a member of Congress, officer or employee of Congress, or an employee of a member of Congress in connection with obtaining any Federal contract, grant or any other award covered by 31 U.S.C. 1352. Each tier shall also disclose the name of any registrant under the Lobbying Disclosure Act of 1995 who has made lobbying contacts on its behalf with non-Federal funds with respect to that Federal contract, grant or award covered by 31 U.S.C. 1352. Such disclosures are forwarded from tier to tier up to the recipient.

6. Access to Records

The following access to records requirements apply to this Contract:

1. Where the Purchaser is not a State but a local government and is the FTA Recipient or a subgrantee of the FTA Recipient in accordance with 49 C. F. R. 18.36(i), the Contractor agrees to provide the Purchaser, the FTA Administrator, the Comptroller General of the United States or any of their authorized representatives access to any books, documents, papers and records of the Contractor which are directly pertinent to this contract for the purposes of making audits, examinations, excerpts and transcriptions. Contractor also agrees, pursuant to 49 C. F. R. 633.17 to provide the FTA Administrator or his authorized representatives including any PMO Contractor access to Contractor's records and construction sites pertaining to a major capital project, defined at 49 U.S.C. 5302(a)1, which is receiving federal financial assistance through the programs described at 49 U.S.C. 5307, 5309 or 5311.
2. Where the Purchaser is a State and is the FTA Recipient or a subgrantee of the FTA Recipient in accordance with 49 C.F.R. 633.17, Contractor agrees to provide the Purchaser, the FTA Administrator or his authorized representatives, including any PMO Contractor, access to the

Contractor's records and construction sites pertaining to a major capital project, defined at 49 U.S.C. 5302(a)1, which is receiving federal financial assistance through the programs described at 49 U.S.C. 5307, 5309 or 5311. By definition, a major capital project excludes contracts of less than the simplified acquisition threshold currently set at $100,000.

3. Where the Purchaser enters into a negotiated contract for other than a small purchase or under the simplified acquisition threshold and is an institution of higher education, a hospital or other non-profit organization and is the FTA Recipient or a subgrantee of the FTA Recipient in accordance with 49 C.F.R. 19.48, Contractor agrees to provide the Purchaser, FTA Administrator, the Comptroller General of the United States or any of their duly authorized representatives with access to any books, documents, papers and record of the Contractor which are directly pertinent to this contract for the purposes of making audits, examinations, excerpts and transcriptions.
4. Where any Purchaser which is the FTA Recipient or a subgrantee of the FTA Recipient in accordance with 49 U.S.C. 5325(a) enters into a contract for a capital project or improvement (defined at 49 U.S.C. 5302(a)1) through other than competitive bidding, the Contractor shall make available records related to the contract to the Purchaser, the Secretary of Transportation and the Comptroller General or any authorized officer or employee of any of them for the purposes of conducting an audit and inspection.
5. The Contractor agrees to permit any of the foregoing parties to reproduce by any means whatsoever or to copy excerpts and transcriptions as reasonably needed.
6. The Contractor agrees to maintain all books, records, accounts and reports required under this contract for a period of not less than three years after the date of termination or expiration of this contract, except in the event of litigation or settlement of claims arising from the performance of this contract, in which case Contractor agrees to maintain same until the Purchaser, the FTA Administrator, the Comptroller General, or any of their duly authorized representatives, have disposed of all such litigation, appeals, claims or exceptions related thereto. Reference 49 CFR 18.39(i)(11).
7. FTA does not require the inclusion of these requirements in subcontracts.

7. Federal Changes

Contractor shall at all times comply with all applicable FTA regulations, policies, procedures and directives, including without limitation those listed directly or by reference in the Master Agreement between Purchaser and FTA, as they may be amended or promulgated from time to time during the term of this contract. Contractor's failure to so comply shall constitute a material breach of this contract.

8. Clean Air

(1) The Contractor agrees to comply with all applicable standards, orders or regulations issued pursuant to the Clean Air Act, as amended, 42 U.S.C. §§ 7401 et seq. The Contractor agrees to report each violation to the Purchaser and understands and agrees that the Purchaser will, in turn, report each violation as required to assure notification to FTA and the appropriate EPA Regional Office.

(2) The Contractor also agrees to include these requirements in each subcontract exceeding $100,000 financed in whole or in part with Federal assistance provided by FTA.

9. Recycled Products

The Recycled Products requirements apply to all contracts for items designated by the EPA, when the purchaser or contractor procures $10,000 or more of one of these items during the fiscal year, or has procured $10,000 or more of such items in the previous fiscal year, using Federal funds. New requirements for "recovered materials" will become effective May 1, 1996. These new regulations apply to all procurement actions involving items designated by the EPA, where the procuring agency purchases $10,000 or more of one of these items in a fiscal year, or when the cost of such items purchased during the previous fiscal year was $10,000.

The contractor agrees to comply with all the requirements of Section 6002 of the Resource Conservation and Recovery Act (RCRA), as amended (42 U.S.C. 6962), including but not limited to the regulatory provisions of 40 CFR Part 247, and Executive Order 12873, as they apply to the procurement of the items designated in Subpart B of 40 CFR Part 247.

10. Davis-Bacon and Copeland Anti-Kickback Acts

(1) Minimum wages

(i) All laborers and mechanics employed or working upon the site of the work (or under the United States Housing Act of 1937 or under the Housing Act of 1949 in the construction or development of the project), will be paid unconditionally and not less often than once a week, and without subsequent deduction or rebate on any account (except such payroll deductions as are permitted by regulations issued by the Secretary of Labor under the Copeland Act (29 CFR part 3)), the full amount of wages and bona fide fringe benefits (or cash equivalents thereof) due at time of payment computed at rates not less than those contained in the wage determination of the Secretary of Labor which is attached hereto and made a part hereof, regardless of any contractual relationship which may be alleged to exist between the contractor and such laborers and mechanics.

Contributions made or costs reasonably anticipated for bona fide fringe benefits under section 1(b)(2) of the Davis-Bacon Act on behalf of laborers or mechanics are considered wages paid to such laborers or mechanics, subject to the provisions of paragraph (1)(iv) of this section; also, regular contributions made or costs incurred for more than a weekly period (but not less often than quarterly) under plans, funds, or programs which cover the particular weekly period, are deemed to be constructively made or incurred during such weekly period. Such laborers and mechanics shall be paid the appropriate wage rate and fringe benefits on the wage determination for the classification of work actually performed, without regard to skill, except as provided in 29 CFR Part 5.5(a)(4). Laborers or mechanics performing work in more than one classification may be compensated at the rate specified for each classification for the time actually worked therein: Provided, That the employer's payroll records accurately set forth the time spent in each classification in which work is performed. The wage determination (including any additional classifications and wage rates conformed under paragraph (1)(ii) of this section) and the Davis-Bacon poster (WH-1321) shall be posted at all times by the contractor and its subcontractors at the site of the work in a prominent and accessible place where it can be easily seen by the workers.

(ii)

(A) The contracting officer shall require that any class of laborers or mechanics, including helpers, which is not listed in the wage determination and which is to be employed under the contract shall be classified in conformance with the wage determination. The contracting officershall approve an additional classification and wage rate and fringe benefits therefore only when the following criteria have been met:

1. Except with respect to helpers as defined as 29 CFR 5.2(n)(4), the work to be performed by the classification requested is not performed by a classification in the wage determination; and
2. The classification is utilized in the area by the construction industry; and
3. The proposed wage rate, including any bona fide fringe benefits, bears a reasonable relationship to the wage rates contained in the wage determination; and
4. With respect to helpers as defined in 29 CFR 5.2(n)(4), such a classification prevails in the area in which the work is performed.

(B) If the contractor and the laborers and mechanics to be employed in the classification (if known), or their representatives, and the contracting officer agree

on the classification and wage rate (including the amount designated for fringe benefits where appropriate), a report of the action taken shall be sent by the contracting officer to the Administrator of the Wage and Hour Division, Employment Standards Administration, U.S. Department of Labor, Washington, DC 20210. The Administrator, or an authorized representative, will approve, modify, or disapprove every additional classification action within 30 days of receipt and so advise the contracting officer or will notify the contracting officer within the 30-day period that additional time is necessary.

(C) In the event the contractor, the laborers or mechanics to be employed in the classification or their representatives, and the contracting officer do not agree on the proposed classification and wage rate (including the amount designated for fringe benefits, where appropriate), the contracting officer shall refer the questions, including the views of all interested parties and the recommendation of the contracting officer, to the Administrator for determination. The Administrator, or an authorized representative, will issue a determination within 30 days of receipt and so advise the contracting officer or will notify the contracting officer within the 30-day period that additional time is necessary.

(D) The wage rate (including fringe benefits where appropriate) determined pursuant to paragraphs (a)(1)(ii) (B) or (C) of this section, shall be paid to all workers performing work in the classification under this contract from the first day on which work is performed in the classification.

(iii) Whenever the minimum wage rate prescribed in the contract for a class of laborers or mechanics includes a fringe benefit which is not expressed as an hourly rate, the contractor shall either pay the benefit as stated in the wage determination or shall pay another bona fide fringe benefit or an hourly cash equivalent thereof.

(iv) If the contractor does not make payments to a trustee or other third person, the contractor may consider as part of the wages of any laborer or mechanic the amount of any costs reasonably anticipated in providing bona fide fringe benefits under a plan or program, Provided, That the Secretary of Labor has found, upon the written request of the contractor, that the applicable standards of the Davis-Bacon Act have been met. The Secretary of Labor may require the contractor to set aside in a separate account assets for the meeting of obligations under the plan or program.

(v)

(A) The contracting officer shall require that any class of laborers or mechanics which is not listed in the wage determination and which is to be employed under the contract shall be classified in conformance with the wage determination. The contracting officer shall approve an additional classification and wage rate and fringe benefits therefor only when the following criteria have been met:

1. The work to be performed by the classification requested is not performed by a classification in the wage determination; and
2. The classification is utilized in the area by the construction industry; and
3. The proposed wage rate, including any bona fide fringe benefits, bears a reasonable relationship to the wage rates contained in the wage determination.

(B) If the contractor and the laborers and mechanics to be employed in the classification (if known), or their representatives, and the contracting officer agree on the classification and wage rate (including the amount designated for fringe benefits where appropriate), a report of the action taken shall be sent by the contracting officer to the Administrator of the Wage and Hour Division, Employment Standards Administration, Washington, DC 20210. The Administrator, or an authorized representative, will approve, modify, or disapprove every additional classification action within 30 days of receipt and so advise the

contracting officer or will notify the contracting officer within the 30-day period that additional time is necessary.

(C) In the event the contractor, the laborers or mechanics to be employed in the classification or their representatives, and the contracting officer do not agree on the proposed classification and wage rate (including the amount designated for fringe benefits, where appropriate), the contracting officer shall refer the questions, including the views of all interested parties and the recommendation of the contracting officer, to the Administrator for determination. The Administrator, or an authorized representative, will issue a determination with 30 days of receipt and so advise the contracting officer or will notify the contracting officer within the 30-day period that additional time is necessary.

(D) The wage rate (including fringe benefits where appropriate) determined pursuant to paragraphs (a)(1)(v) (B) or (C) of this section, shall be paid to all workers performing work in the classification under this contract from the first day on which work is performed in the classification.

(2) Withholding - The ***City of Turlock*** shall upon its own action or upon written request of an authorized representative of the Department of Labor withhold or cause to be withheld from the contractor under this contract or any other Federal contract with the same prime contractor, or any other federally-assisted contract subject to Davis-Bacon prevailing wage requirements, which is held by the same prime contractor, so much of the accrued payments or advances as may be considered necessary to pay laborers and mechanics, including apprentices, trainees, and helpers, employed by the contractor or any subcontractor the full amount of wages required by the contract. In the event of failure to pay any laborer or mechanic, including any apprentice, trainee, or helper, employed or working on the site of the work (or under the United States Housing Act of 1937 or under the Housing Act of 1949 in the construction or development of the project), all or part of the wages required by the contract, the ***City of Turlock*** may, after written notice to the contractor, sponsor, applicant, or owner, take such action as may be necessary to cause the suspension of any further payment, advance, or guarantee of funds until such violations have ceased.

(3) Payrolls and basic records –

(i) Payrolls and basic records relating thereto shall be maintained by the contractor during the course of the work and preserved for a period of three years thereafter for all laborers and mechanics working at the site of the work (or under the United States Housing Act of 1937, or under the Housing Act of 1949, in the construction or development of the project). Such records shall contain the name, address, and social security number of each such worker, his or her correct classification, hourly rates of wages paid (including rates of contributions or costs anticipated for bona fide fringe benefits or cash equivalents thereof of the types described in section 1(b)(2)(B) of the Davis-Bacon Act), daily and weekly number of hours worked, deductions made and actual wages paid. Whenever the Secretary of Labor has found under 29 CFR 5.5(a)(1)(iv) that the wages of any laborer or mechanic include the amount of any costs reasonably anticipated in providing benefits under a plan or program described in section 1(b)(2)(B) of the Davis-Bacon Act, the contractor shall maintain records which show that the commitment to provide such benefits is enforceable, that the plan or program is financially responsible, and that the plan or program has been communicated in writing to the laborers or mechanics affected, and records which show the costs anticipated or the actual cost incurred in providing such benefits. Contractors employing apprentices or trainees under approved programs shall maintain written evidence of the registration of apprenticeship programs and certification of trainee programs, the registration of the apprentices and trainees, and the ratios and wage rates prescribed in the applicable programs.

(ii)

(A) The contractor shall submit weekly for each week in which any contract work is performed a copy of all payrolls to the City of Turlock for transmission to the Federal Transit Administration. The payrolls submitted shall set out accurately and

completely all of the information required to be maintained under section 5.5(a)(3)(i) of Regulations, 29 CFR part 5. This information may be submitted in any form desired. Optional Form WH-347 is available for this purpose and may be purchased from the Superintendent of Documents (Federal Stock Number 029-005-00014-1), U.S. Government Printing Office, Washington, DC 20402. The prime contractor is responsible for the submission of copies of payrolls by all subcontractors.

(B) Each payroll submitted shall be accompanied by a "Statement of Compliance," signed by the contractor or subcontractor or his or her agent who pays or supervises the payment of the persons employed under the contract and shall certify the following:

1. (1) That the payroll for the payroll period contains the information required to be maintained under section 5.5(a)(3)(i) of Regulations, 29 CFR part 5 and that such information is correct and complete;
2. (2) That each laborer or mechanic (including each helper, apprentice, and trainee) employed on the contract during the payroll period has been paid the full weekly wages earned, without rebate, either directly or indirectly, and that no deductions have been made either directly or indirectly from the full wages earned, other than permissible deductions as set forth in Regulations, 29 CFR part 3;
3. (3) That each laborer or mechanic has been paid not less than the applicable wage rates and fringe benefits or cash equivalents for the classification of work performed, as specified in the applicable wage determination incorporated into the contract.

(C) The weekly submission of a properly executed certification set forth on the reverse side of Optional Form WH-347 shall satisfy the requirement for submission of the "Statement of Compliance" required by paragraph (a)(3)(ii)(B) of this section.

(D) The falsification of any of the above certifications may subject the contractor or subcontractor to civil or criminal prosecution under section 1001 of title 18 and section 231 of title 31 of the United States Code.

(iii) The contractor or subcontractor shall make the records required under paragraph (a)(3)(i) of this section available for inspection, copying, or transcription by authorized representatives of the Federal Transit Administration or the Department of Labor, and shall permit such representatives to interview employees during working hours on the job. If the contractor or subcontractor fails to submit the required records or to make them available, the Federal agency may, after written notice to the contractor, sponsor, applicant, or owner, take such action as may be necessary to cause the suspension of any further payment, advance, or guarantee of funds. Furthermore, failure to submit the required records upon request or to make such records available may be grounds for debarment action pursuant to 29 CFR 5.12.

(4) Apprentices and trainees –

(i) Apprentices - Apprentices will be permitted to work at less than the predetermined rate for the work they performed when they are employed pursuant to and individually registered in a bona fide apprenticeship program registered with the U.S. Department of Labor, Employment and Training Administration, Bureau of Apprenticeship and Training, or with a State Apprenticeship Agency recognized by the Bureau, or if a person is employed in his or her first 90 days of probationary employment as an apprentice in such an apprenticeship program, who is not individually registered in the program, but who has been certified by the Bureau of Apprenticeship and Training or a State Apprenticeship Agency (where appropriate) to be eligible for probationary employment as an apprentice. The allowable ratio of apprentices to journeymen on the job site in any craft classification shall not be greater than the ratio permitted to the contractor as to the entire work force

under the registered program. Any worker listed on a payroll at an apprentice wage rate, who is not registered or otherwise employed as stated above, shall be paid not less than the applicable wage rate on the wage determination for the classification of work actually performed. In addition, any apprentice performing work on the job site in excess of the ratio permitted under the registered program shall be paid not less than the applicable wage rate on the wage determination for the work actually performed. Where a contractor is performing construction on a project in a locality other than that in which its program is registered, the ratios and wage rates (expressed in percentages of the journeyman's hourly rate) specified in the contractor's or subcontractor's registered program shall be observed. Every apprentice must be paid at not less than the rate specified in the registered program for the apprentice's level of progress, expressed as a percentage of the journeymen hourly rate specified in the applicable wage determination. Apprentices shall be paid fringe benefits in accordance with the provisions of the apprenticeship program. If the apprenticeship program does not specify fringe benefits, apprentices must be paid the full amount of fringe benefits listed on the wage determination for the applicable classification. If the Administrator of the Wage and Hour Division of the U.S. Department of Labor determines that a different practice prevails for the applicable apprentice classification, fringes shall be paid in accordance with that determination. In the event the Bureau of Apprenticeship and Training, or a State Apprenticeship Agency recognized by the Bureau, withdraws approval of an apprenticeship program, the contractor will no longer be permitted to utilize apprentices at less than the applicable predetermined rate for the work performed until an acceptable program is approved.

(ii) Trainees - Except as provided in 29 CFR 5.16, trainees will not be permitted to work at less than the predetermined rate for the work performed unless they are employed pursuant to and individually registered in a program which has received prior approval, evidenced by formal certification by the U.S. Department of Labor, Employment and Training Administration. The ratio of trainees to journeymen on the job site shall not be greater than permitted under the plan approved by the Employment and Training Administration. Every trainee must be paid at not less than the rate specified in the approved program for the trainee's level of progress, expressed as a percentage of the journeyman hourly rate specified in the applicable wage determination. Trainees shall be paid fringe benefits in accordance with the provisions of the trainee program. If the trainee program does not mention fringe benefits, trainees shall be paid the full amount of fringe benefits listed on the wage determination unless the Administrator of the Wage and Hour Division determines that there is an apprenticeship program associated with the corresponding journeyman wage rate on the wage determination which provides for less than full fringe benefits for apprentices. Any employee listed on the payroll at a trainee rate who is not registered and participating in a training plan approved by the Employment and Training Administration shall be paid not less than the applicable wage rate on the wage determination for the classification of work actually performed. In addition, any trainee performing work on the job site in excess of the ratio permitted under the registered program shall be paid not less than the applicable wage rate on the wage determination for the work actually performed. In the event the Employment and Training Administration withdraws approval of a training program, the contractor will no longer be permitted to utilize trainees at less than the applicable predetermined rate for the work performed until an acceptable program is approved.

(iii) Equal employment opportunity - The utilization of apprentices, trainees and journeymen under this part shall be in conformity with the equal employment opportunity requirements of Executive Order 11246, as amended, and 29 CFR part 30.

(5) Compliance with Copeland Act requirements - The contractor shall comply with the requirements of 29 CFR part 3, which are incorporated by reference in this contract.

(6) Subcontracts - The contractor or subcontractor shall insert in any subcontracts the clauses contained in 29 CFR 5.5(a)(1) through (10) and such other clauses as the Federal Transit Administration may by appropriate instructions require, and also a clause requiring the subcontractors to include these clauses in any lower tier subcontracts. The prime contractor shall

be responsible for the compliance by any subcontractor or lower tier subcontractor with all the contract clauses in 29 CFR 5.5.

(7) Contract termination: debarment - A breach of the contract clauses in 29 CFR 5.5 may be grounds for termination of the contract, and for debarment as a contractor and a subcontractor as provided in 29 CFR 5.12.

(8) Compliance with Davis-Bacon and Related Act requirements - All rulings and interpretations of the Davis-Bacon and Related Acts contained in 29 CFR parts 1, 3, and 5 are herein incorporated by reference in this contract.

(9) Disputes concerning labor standards - Disputes arising out of the labor standards provisions of this contract shall not be subject to the general disputes clause of this contract. Such disputes shall be resolved in accordance with the procedures of the Department of Labor set forth in 29 CFR parts 5, 6, and 7. Disputes within the meaning of this clause include disputes between the contractor (or any of its subcontractors) and the contracting agency, the U.S. Department of Labor, or the employees or their representatives.

(10) Certification of eligibility –

(i) By entering into this contract, the contractor certifies that neither it (nor he or she) nor any person or firm who has an interest in the contractor's firm is a person or firm ineligible to be awarded Government contracts by virtue of section 3(a) of the Davis-Bacon Act or 29 CFR 5.12(a)(1).

(ii) No part of this contract shall be subcontracted to any person or firm ineligible for award of a Government contract by virtue of section 3(a) of the Davis-Bacon Act or 29 CFR 5.12(a)(1).

(iii) The penalty for making false statements is prescribed in the U.S. Criminal Code, 18 U.S.C. 1001.

11. Contract Work Hours and Safety Standards

1. **Overtime requirements -** No contractor or subcontractor contracting for any part of the contract work which may require or involve the employment of laborers or mechanics shall require or permit any such laborer or mechanic in any workweek in which he or she is employed on such work to work in excess of forty hours in such workweek unless such laborer or mechanic receives compensation at a rate not less than one and one-half times the basic rate of pay for all hours worked in excess of forty hours in such workweek.

2. **Violation; liability for unpaid wages; liquidated damages -** In the event of any violation of the clause set forth in paragraph (1) of this section the contractor and any subcontractor responsible therefor shall be liable for the unpaid wages. In addition, such contractor and subcontractor shall be liable to the United States for liquidated damages. Such liquidated damages shall be computed with respect to each individual laborer or mechanic, including watchmen and guards, employed in violation of the clause set forth in paragraph (1) of this section, in the sum of $10 for each calendar day on which such individual was required or permitted to work in excess of the standard workweek of forty hours without payment of the overtime wages required by the clause set forth in paragraph (1) of this section.

3. **Withholding for unpaid wages and liquidated damages -** The City of Turlock shall upon its own action or upon written request of an authorized representative of the Department of Labor withhold or cause to be withheld, from any moneys payable on account of work performed by the contractor or subcontractor under any such contract or any other Federal contract with the same prime contractor, or any other federally-assisted contract subject to the Contract Work Hours and Safety Standards Act, which is held by the same prime contractor, such sums as

may be determined to be necessary to satisfy any liabilities of such contractor or subcontractor for unpaid wages and liquidated damages as provided in the clause set forth in paragraph (2) of this section.

4. **Subcontracts -** The contractor or subcontractor shall insert in any subcontracts the clauses set forth in paragraphs (1) through (4) of this section and also a clause requiring the subcontractors to include these clauses in any lower tier subcontracts. The prime contractor shall be responsible for compliance by any subcontractor or lower tier subcontractor with the clauses set forth in paragraphs (1) through (4) of this section.

12. No Obligation by the Federal Government.

1. The Purchaser and Contractor acknowledge and agree that, notwithstanding any concurrence by the Federal Government in or approval of the solicitation or award of the underlying contract, absent the express written consent by the Federal Government, the Federal Government is not a party to this contract and shall not be subject to any obligations or liabilities to the Purchaser, Contractor, or any other party (whether or not a party to that contract) pertaining to any matter resulting from the underlying contract.

2. The Contractor agrees to include the above clause in each subcontract financed in whole or in part with Federal assistance provided by FTA. It is further agreed that the clause shall not be modified, except to identify the subcontractor who will be subject to its provisions.

13. Program Fraud and False or Fraudulent Statements or Related Acts.

1. The Contractor acknowledges that the provisions of the Program Fraud Civil Remedies Act of 1986, as amended, 31 U.S.C. § § 3801 et seq . and U.S. DOT regulations, "Program Fraud Civil Remedies," 49 C.F.R. Part 31, apply to its actions pertaining to this Project. Upon execution of the underlying contract, the Contractor certifies or affirms the truthfulness and accuracy of any statement it has made, it makes, it may make, or causes to be made, pertaining to the underlying contract or the FTA assisted project for which this contract work is being performed. In addition to other penalties that may be applicable, the Contractor further acknowledges that if it makes, or causes to be made, a false, fictitious, or fraudulent claim, statement, submission, or certification, the Federal Government reserves the right to impose the penalties of the Program Fraud Civil Remedies Act of 1986 on the Contractor to the extent the Federal Government deems appropriate.

2. The Contractor also acknowledges that if it makes, or causes to be made, a false, fictitious, or fraudulent claim, statement, submission, or certification to the Federal Government under a contract connected with a project that is financed in whole or in part with Federal assistance originally awarded by FTA under the authority of 49 U.S.C. § 5307, the Government reserves the right to impose the penalties of 18 U.S.C. § 1001 and 49 U.S.C. § 5307(n)(1) on the Contractor, to the extent the Federal Government deems appropriate.

3. The Contractor agrees to include the above two clauses in each subcontract financed in whole or in part with Federal assistance provided by FTA. It is further agreed that the clauses shall not be modified, except to identify the subcontractor who will be subject to the provisions.

14. Termination

1. **Termination for Convenience (General Provision)** The City of Turlock may terminate this contract, in whole or in part, at any time by written notice to the Contractor when it is in the Government's best interest. The Contractor shall be paid its costs, including contract close-out costs, and profit on work performed up to the time of termination. The Contractor shall promptly submit its termination claim to City of Turlock to be paid the Contractor. If the Contractor has any property in its possession belonging to the City of Turlock, the Contractor will account for the same, and dispose of it in the manner the City of Turlock directs.

2. **Termination for Default [Breach or Cause] (General Provision)** If the Contractor does not deliver supplies in accordance with the contract delivery schedule, or, if the contract is for services, the Contractor fails to perform in the manner called for in the contract, or if the Contractor fails to comply with any other provisions of the contract, the City of Turlock may terminate this contract for default. Termination shall be effected by serving a notice of termination on the contractor setting forth the manner in which the Contractor is in default. The contractor will only be paid the contract price for supplies delivered and accepted, or services performed in accordance with the manner of performance set forth in the contract.

   If it is later determined by the City of Turlock that the Contractor had an excusable reason for not performing, such as a strike, fire, or flood, events which are not the fault of or are beyond the control of the Contractor, the City of Turlock, after setting up a new delivery of performance schedule, may allow the Contractor to continue work, or treat the termination as a termination for convenience.

3. **Opportunity to Cure (General Provision)** The City of Turlock in its sole discretion may, in the case of a termination for breach or default, allow the Contractor [an appropriately short period of time] in which to cure the defect. In such case, the notice of termination will state the time period in which cure is permitted and other appropriate conditions

   If Contractor fails to remedy to City of Turlock's satisfaction the breach or default of any of the terms, covenants, or conditions of this Contract within [ten (10) days] after receipt by Contractor of written notice from City of Turlock setting forth the nature of said breach or default, City of Turlock shall have the right to terminate the Contract without any further obligation to Contractor. Any such termination for default shall not in any way operate to preclude City of Turlock from also pursuing all available remedies against Contractor and its sureties for said breach or default.

4. **Waiver of Remedies for any Breach** In the event that City of Turlock elects to waive its remedies for any breach by Contractor of any covenant, term or condition of this Contract, such waiver by City of Turlock shall not limit City of Turlock's remedies for any succeeding breach of that or of any other term, covenant, or condition of this Contract.

5. **Termination for Convenience (Professional or Transit Service Contracts)** The City of Turlock, by written notice, may terminate this contract, in whole or in part, when it is in the Government's interest. If this contract is terminated, the Recipient shall be liable only for payment under the payment provisions of this contract for services rendered before the effective date of termination.

6. **Termination for Default (Supplies and Service)** If the Contractor fails to deliver supplies or to perform the services within the time specified in this contract or any extension or if the Contractor fails to comply with any other provisions of this contract, the City of Turlock may terminate this contract for default. The City of Turlock shall terminate by delivering to the Contractor a Notice of Termination specifying the nature of the default. The Contractor will only be paid the contract

price for supplies delivered and accepted, or services performed in accordance with the manner or performance set forth in this contract.

If, after termination for failure to fulfill contract obligations, it is determined that the Contractor was not in default, the rights and obligations of the parties shall be the same as if the termination had been issued for the convenience of the Recipient.

7. **Termination for Default (Transportation Services)** If the Contractor fails to pick up the commodities or to perform the services, including delivery services, within the time specified in this contract or any extension or if the Contractor fails to comply with any other provisions of this contract, the City of Turlock may terminate this contract for default. The City of Turlock shall terminate by delivering to the Contractor a Notice of Termination specifying the nature of default. The Contractor will only be paid the contract price for services performed in accordance with the manner of performance set forth in this contract.

   If this contract is terminated while the Contractor has possession of Recipient goods, the Contractor shall, upon direction of the City of Turlock, protect and preserve the goods until surrendered to the Recipient or its agent. The Contractor and City of Turlock shall agree on payment for the preservation and protection of goods. Failure to agree on an amount will be resolved under the Dispute clause.

   If, after termination for failure to fulfill contract obligations, it is determined that the Contractor was not in default, the rights and obligations of the parties shall be the same as if the termination had been issued for the convenience of the City of Turlock.

8. **Termination for Default (Construction)** If the Contractor refuses or fails to prosecute the work or any separable part, with the diligence that will insure its completion within the time specified in this contract or any extension or fails to complete the work within this time, or if the Contractor fails to comply with any other provisions of this contract, the City of Turlock may terminate this contract for default. The City of Turlock shall terminate by delivering to the Contractor a Notice of Termination specifying the nature of the default. In this event, the Recipient may take over the work and compete it by contract or otherwise, and may take possession of and use any materials, appliances, and plant on the work site necessary for completing the work. The Contractor and its sureties shall be liable for any damage to the Recipient resulting from the Contractor's refusal or failure to complete the work within specified time, whether or not the Contractor's right to proceed with the work is terminated. This liability includes any increased costs incurred by the Recipient in completing the work.

   The Contractor's right to proceed shall not be terminated nor the Contractor charged with damages under this clause if-

   1. the delay in completing the work arises from unforeseeable causes beyond the control and without the fault or negligence of the Contractor. Examples of such causes include: acts of God, acts of the Recipient, acts of another Contractor in the performance of a contract with the Recipient, epidemics, quarantine restrictions, strikes, freight embargoes; and

   2. the contractor, within [10] days from the beginning of any delay, notifies the City of Turlock in writing of the causes of delay. If in the judgment of the City of Turlock, the delay is excusable, the time for completing the work shall be extended. The judgment of the City of Turlock shall be final and conclusive on the parties, but subject to appeal under the Disputes clauses.

If, after termination of the Contractor's right to proceed, it is determined that the Contractor was not in default, or that the delay was excusable, the rights and obligations of the parties will be the same as if the termination had been issued for the convenience of the Recipient.

9. **Termination for Convenience or Default (Architect and Engineering)** The City of Turlock may terminate this contract in whole or in part, for the Recipient's convenience or because of the failure of the Contractor to fulfill the contract obligations. The City of Turlock shall terminate by delivering to the Contractor a Notice of Termination specifying the nature, extent, and effective date of the termination. Upon receipt of the notice, the Contractor shall (1) immediately discontinue all services affected (unless the notice directs otherwise), and (2) deliver to the Contracting Officer all data, drawings, specifications, reports, estimates, summaries, and other information and materials accumulated in performing this contract, whether completed or in process.

   If the termination is for the convenience of the Recipient, the Contracting Officer shall make an equitable adjustment in the contract price but shall allow no anticipated profit on unperformed services.

   If the termination is for failure of the Contractor to fulfill the contract obligations, the Recipient may complete the work by contact or otherwise and the Contractor shall be liable for any additional cost incurred by the Recipient.

   If, after termination for failure to fulfill contract obligations, it is determined that the Contractor was not in default, the rights and obligations of the parties shall be the same as if the termination had been issued for the convenience of the Recipient.

10. **Termination for Convenience of Default (Cost-Type Contracts)** The City of Turlock may terminate this contract, or any portion of it, by serving a notice or termination on the Contractor. The notice shall state whether the termination is for convenience of the City of Turlock or for the default of the Contractor. If the termination is for default, the notice shall state the manner in which the contractor has failed to perform the requirements of the contract. The Contractor shall account for any property in its possession paid for from funds received from the City of Turlock, or property supplied to the Contractor by the City of Turlock. If the termination is for default, the City of Turlock may fix the fee, if the contract provides for a fee, to be paid the contractor in proportion to the value, if any, of work performed up to the time of termination. The Contractor shall promptly submit its termination claim to the City of Turlock and the parties shall negotiate the termination settlement to be paid the Contractor.

    If the termination is for the convenience of the City of Turlock, the Contractor shall be paid its contract close-out costs, and a fee, if the contract provided for payment of a fee, in proportion to the work performed up to the time of termination.

    If, after serving a notice of termination for default, the City of Turlock determines that the Contractor has an excusable reason for not performing, such as strike, fire, flood, events which are not the fault of and are beyond the control of the contractor, the City of Turlock, after setting up a new work schedule, may allow the Contractor to continue work, or treat the termination as a termination for convenience.

15. Suspension and Debarment

This contract is a covered transaction for purposes of 49 CFR Part 29. As such, the contractor is required to verify that none of the contractor, its principals, as defined at 49

CFR 29.995, or affiliates, as defined at 49 CFR 29.905, are excluded or disqualified as defined at 49 CFR 29.940 and 29.945.

The contractor is required to comply with 49 CFR 29, Subpart C and must include the requirement to comply with 49 CFR 29, Subpart C in any lower tier covered transaction it enters into.

By signing and submitting its bid or proposal, the bidder or proposer certifies as follows:

The certification in this clause is a material representation of fact relied upon by City of Turlock. If it is later determined that the bidder or proposer knowingly rendered an erroneous certification, in addition to remedies available to City of Turlock, the Federal Government may pursue available remedies, including but not limited to suspension and/or debarment. The bidder or proposer agrees to comply with the requirements of 49 CFR 29, Subpart C while this offer is valid and throughout the period of any contract that may arise from this offer. The bidder or proposer further agrees to include a provision requiring such compliance in its lower tier covered transactions.

16. Civil Rights

The following requirements apply to the underlying contract:

1. *Nondiscrimination* - In accordance with Title VI of the Civil Rights Act, as amended, 42 U.S.C. § 2000d, section 303 of the Age Discrimination Act of 1975, as amended, 42 U.S.C. § 6102, section 202 of the Americans with Disabilities Act of 1990, 42 U.S.C. § 12132, and Federal transit law at 49 U.S.C. § 5332, the Contractor agrees that it will not discriminate against any employee or applicant for employment because of race, color, creed, national origin, sex, age, or disability. In addition, the Contractor agrees to comply with applicable Federal implementing regulations and other implementing requirements FTA may issue.

2. *Equal Employment Opportunity* - The following equal employment opportunity requirements apply to the underlying contract:

    a. *Race, Color, Creed, National Origin, Sex* - In accordance with Title VII of the Civil Rights Act, as amended, 42 U.S.C. § 2000e, and Federal transit laws at 49 U.S.C. § 5332, the Contractor agrees to comply with all applicable equal employment opportunity requirements of U.S. Department of Labor (U.S. DOL) regulations, "Office of Federal Contract Compliance Programs, Equal Employment Opportunity, Department of Labor," 41 C.F.R. Parts 60 *et seq* ., (which implement Executive Order No. 11246, "Equal Employment Opportunity," as amended by Executive Order No. 11375, "Amending Executive Order 11246 Relating to Equal Employment Opportunity," 42 U.S.C. § 2000e note), and with any applicable Federal statutes, executive orders, regulations, and Federal policies that may in the future affect construction activities undertaken in the course of the Project. The Contractor agrees to take affirmative action to ensure that applicants are employed, and that employees are treated during employment, without regard to their race, color, creed, national origin, sex, or age. Such action shall include, but not be limited to, the following: employment, upgrading, demotion or transfer, recruitment or recruitment advertising, layoff or termination; rates of pay or other forms of compensation; and selection for training, including apprenticeship. In addition, the Contractor agrees to comply with any implementing requirements FTA may issue.

    b. *Age* - In accordance with section 4 of the Age Discrimination in Employment Act of 1967, as amended, 29 U.S.C. § § 623 and Federal transit law at 49 U.S.C. § 5332, the Contractor agrees to refrain from

discrimination against present and prospective employees for reason of age. In addition, the Contractor agrees to comply with any implementing requirements FTA may issue.

c. *Disabilities* - In accordance with section 102 of the Americans with Disabilities Act, as amended, 42 U.S.C. § 12112, the Contractor agrees that it will comply with the requirements of U.S. Equal Employment Opportunity Commission, "Regulations to Implement the Equal Employment Provisions of the Americans with Disabilities Act," 29 C.F.R. Part 1630, pertaining to employment of persons with disabilities. In addition, the Contractor agrees to comply with any implementing requirements FTA may issue.

3. The Contractor also agrees to include these requirements in each subcontract financed in whole or in part with Federal assistance provided by FTA, modified only if necessary to identify the affected parties.

17. Breaches and Dispute Resolution

The processes set forth in the current edition of the 2010 Caltrans Standard Specifications shall be used for claims and disputes.

18. Disadvantaged Business Enterprises

a. This contract is subject to the requirements of Title 49, Code of Federal Regulations, Part 26, *Participation by Disadvantaged Business Enterprises in Department of Transportation Financial Assistance Programs.* The national goal for participation of Disadvantaged Business Enterprises (DBE) is 10%. The agency's overall goal for DBE participation is 4.23**%.** A separate contract goal **of 4.23% DBE participation has** been established for this procurement.

b. The contractor shall not discriminate on the basis of race, color, national origin, or sex in the performance of this contract. The contractor shall carry out applicable requirements of 49 CFR Part 26 in the award and administration of this DOT-assisted contract. Failure by the contractor to carry out these requirements is a material breach of this contract, which may result in the termination of this contract or such other remedy as City of Turlock deems appropriate. Each subcontract the contractor signs with a subcontractor must include the assurance in this paragraph (see 49 CFR 26.13(b)).

c. Bidders/offerors are required to document sufficient DBE participation to meet these goals or, alternatively, document adequate good faith efforts to do so, as provided for in 49 CFR 26.53. Award of this contract is conditioned on submission of the following concurrent with and accompanying sealed bid:

1. The names and addresses of DBE firms that will participate in this contract;
2. A description of the work each DBE will perform;
3. The dollar amount of the participation of each DBE firm participating;
4. Written documentation of the bidder/offeror's commitment to use a DBE subcontractor whose participation it submits to meet the contract goal;
5. Written confirmation from the DBE that it is participating in the contract as provided in the prime contractor's commitment; and
6. If the contract goal is not met, evidence of good faith efforts to do so.

Bidders must present the information required above as a matter of responsiveness (see 49 CFR 26.53(3)).

d. The contractor is required to pay its subcontractors performing work related to this contract for satisfactory performance of that work no later than 30 days after the contractor's receipt of payment for that work from the City of Turlock. In addition, the contractor is required to return any retainage payments to those subcontractors within 30 days after incremental acceptance of the subcontractor's work by the City of Turlock and contractor's receipt of the partial retainage payment related to the subcontractor's work.

e. The contractor must promptly notify City of Turlock, whenever a DBE subcontractor performing work related to this contract is terminated or fails to complete its work, and must make good faith efforts to engage another DBE subcontractor to perform at least the same amount of work. The contractor may not terminate any DBE subcontractor and perform that work through its own forces or those of an affiliate without prior written consent of City of Turlock.

19. Incorporation of Federal Transit Administration (FTA) Terms

The preceding provisions include, in part, certain Standard Terms and Conditions required by DOT, whether or not expressly set forth in the preceding contract provisions. All contractual provisions required by DOT, as set forth in FTA Circular 4220.1E are hereby incorporated by reference. Anything to the contrary herein notwithstanding, all FTA mandated terms shall be deemed to control in the event of a conflict with other provisions contained in this Agreement. The Contractor shall not perform any act, fail to perform any act, or refuse to comply with any City of Turlock requests which would cause City of Turlock to be in violation of the FTA terms and conditions.

CONFORMED

SECTION 01 00 00

GENERAL CONDITIONS

The following pages (1 - 42) contain the project General Conditions of the Contract for Construction per AIA Document A201 – 2007.

Note: Additions, revisions and deletions to this document were made as supplementary conditions and not revised on the original A201 document. Therefore, the note on the first page of A201 regarding Additions and Deletions does not apply and there are note vertical lines indicating where the changes occurred. Please see Supplementary Conditions 01 10 00 for additions revisions and deletions.

Related Sections: 01 10 00 Supplementary Conditions - for amendments and supplements to the General Conditions

CONFORMED

AIA® Document A201™ – 2007

General Conditions of the Contract for Construction

for the following PROJECT:
(Name and location or address)
Turlock Regional Transit Center Phase 2
1418 N. Golden State Blvd.
Turlock, CA 95380

THE OWNER:
(Name, legal status and address)
City of Turlock
156 S. Broadway, Suite 150
Turlock, CA 9580

THE ARCHITECT:
(Name, legal status and address)
Pires, Lipomi + Navarro Architects
1720 G Street
Modesto, CA 95354

ADDITIONS AND DELETIONS:
The author of this document has added information needed for its completion. The author may also have revised the text of the original AIA standard form. An *Additions and Deletions Report* that notes added information as well as revisions to the standard form text is available from the author and should be reviewed. A vertical line in the left margin of this document indicates where the author has added necessary information and where the author has added to or deleted from the original AIA text.

This document has important legal consequences. Consultation with an attorney is encouraged with respect to its completion or modification.

TABLE OF ARTICLES

1 GENERAL PROVISIONS

2 OWNER

3 CONTRACTOR

4 ARCHITECT

5 SUBCONTRACTORS

6 CONSTRUCTION BY OWNER OR BY SEPARATE CONTRACTORS

7 CHANGES IN THE WORK

8 TIME

9 PAYMENTS AND COMPLETION

10 PROTECTION OF PERSONS AND PROPERTY

11 INSURANCE AND BONDS

12 UNCOVERING AND CORRECTION OF WORK

13 MISCELLANEOUS PROVISIONS

14 TERMINATION OR SUSPENSION OF THE CONTRACT

15 CLAIMS AND DISPUTES

Init.
/

AIA Document A201™ – 2007. Copyright © 1911, 1915, 1918, 1925, 1937, 1951, 1958, 1961, 1963, 1966, 1970, 1976, 1987, 1997 and 2007 by The American Institute of Architects. **All rights reserved.** **WARNING: This AIA® Document is protected by U.S. Copyright Law and International Treaties. Unauthorized reproduction or distribution of this AIA® Document, or any portion of it, may result in severe civil and criminal penalties, and will be prosecuted to the maximum extent possible under the law.** This document was produced by AIA software at 12:30:07 on 10/15/2015 under Order No. 3613561640 which expires on 09/28/2016, and is not for resale.
User Notes:
(3B9ADA0B)

CONFORMED

INDEX
(Topics and numbers in bold are section headings.)

Acceptance of Nonconforming Work
9.6.6, 9.9.3, 12.3
Acceptance of Work
9.6.6, 9.8.2, 9.9.3, 9.10.1, 9.10.3, 12.3
Access to Work
3.16, 6.2.1, 12.1
Accident Prevention
10
Acts and Omissions
3.2, 3.3.2, 3.12.8, 3.18, 4.2.3, 8.3.1, 9.5.1, 10.2.5, 10.2.8, 13.4.2, 13.7, 14.1, 15.2
Addenda
1.1.1, 3.11
Additional Costs, Claims for
3.7.4, 3.7.5, 6.1.1, 7.3.7.5, 10.3, 15.1.4
Additional Inspections and Testing
9.4.2, 9.8.3, 12.2.1, 13.5
Additional Insured
11.1.4
Additional Time, Claims for
3.2.4, 3.7.4, 3.7.5, 3.10.2, 8.3.2, 15.1.5
Administration of the Contract
3.1.3, 4.2, 9.4, 9.5
Advertisement or Invitation to Bid
1.1.1
Aesthetic Effect
4.2.13
Allowances
3.8, 7.3.8
All-risk Insurance
11.3.1, 11.3.1.1
Applications for Payment
4.2.5, 7.3.9, 9.2, 9.3, 9.4, 9.5.1, 9.6.3, 9.7, 9.10, 11.1.3
Approvals
2.1.1, 2.2.2, 2.4, 3.1.3, 3.10.2, 3.12.8, 3.12.9, 3.12.10, 4.2.7, 9.3.2, 13.5.1
Arbitration
8.3.1, 11.3.10, 13.1, 15.3.2, 15.4
ARCHITECT
4
Architect, Definition of
4.1.1
Architect, Extent of Authority
2.4, 3.12.7, 4.1, 4.2, 5.2, 6.3, 7.1.2, 7.3.7, 7.4, 9.2, 9.3.1, 9.4, 9.5, 9.6.3, 9.8, 9.10.1, 9.10.3, 12.1, 12.2.1, 13.5.1, 13.5.2, 14.2.2, 14.2.4, 15.1.3, 15.2.1
Architect, Limitations of Authority and Responsibility
2.1.1, 3.12.4, 3.12.8, 3.12.10, 4.1.2, 4.2.1, 4.2.2, 4.2.3, 4.2.6, 4.2.7, 4.2.10, 4.2.12, 4.2.13, 5.2.1, 7.4, 9.4.2, 9.5.3, 9.6.4, 15.1.3, 15.2
Architect's Additional Services and Expenses
2.4, 11.3.1.1, 12.2.1, 13.5.2, 13.5.3, 14.2.4
Architect's Administration of the Contract
3.1.3, 4.2, 3.7.4, 15.2, 9.4.1, 9.5
Architect's Approvals
2.4, 3.1.3, 3.5, 3.10.2, 4.2.7
Architect's Authority to Reject Work
3.5, 4.2.6, 12.1.2, 12.2.1
Architect's Copyright
1.1.7, 1.5
Architect's Decisions
3.7.4, 4.2.6, 4.2.7, 4.2.11, 4.2.12, 4.2.13, 4.2.14, 6.3, 7.3.7, 7.3.9, 8.1.3, 8.3.1, 9.2, 9.4.1, 9.5, 9.8.4, 9.9.1, 13.5.2, 15.2, 15.3
Architect's Inspections
3.7.4, 4.2.2, 4.2.9, 9.4.2, 9.8.3, 9.9.2, 9.10.1, 13.5
Architect's Instructions
3.2.4, 3.3.1, 4.2.6, 4.2.7, 13.5.2
Architect's Interpretations
4.2.11, 4.2.12
Architect's Project Representative
4.2.10
Architect's Relationship with Contractor
1.1.2, 1.5, 3.1.3, 3.2.2, 3.2.3, 3.2.4, 3.3.1, 3.4.2, 3.5, 3.7.4, 3.7.5, 3.9.2, 3.9.3, 3.10, 3.11, 3.12, 3.16, 3.18, 4.1.2, 4.1.3, 4.2, 5.2, 6.2.2, 7, 8.3.1, 9.2, 9.3, 9.4, 9.5, 9.7, 9.8, 9.9, 10.2.6, 10.3, 11.3.7, 12, 13.4.2, 13.5, 15.2
Architect's Relationship with Subcontractors
1.1.2, 4.2.3, 4.2.4, 4.2.6, 9.6.3, 9.6.4, 11.3.7
Architect's Representations
9.4.2, 9.5.1, 9.10.1
Architect's Site Visits
3.7.4, 4.2.2, 4.2.9, 9.4.2, 9.5.1, 9.9.2, 9.10.1, 13.5
Asbestos
10.3.1
Attorneys' Fees
3.18.1, 9.10.2, 10.3.3
Award of Separate Contracts
6.1.1, 6.1.2
Award of Subcontracts and Other Contracts for Portions of the Work
5.2
Basic Definitions
1.1
Bidding Requirements
1.1.1, 5.2.1, 11.4.1
Binding Dispute Resolution
9.7, 11.3.9, 11.3.10, 13.1, 15.2.5, 15.2.6.1, 15.3.1, 15.3.2, 15.4.1
Boiler and Machinery Insurance

AIA Document A201™ – 2007. Copyright © 1911, 1915, 1918, 1925, 1937, 1951, 1958, 1961, 1963, 1966, 1970, 1976, 1987, 1997 and 2007 by The American Institute of Architects. **All rights reserved.** **WARNING: This AIA® Document is protected by U.S. Copyright Law and International Treaties. Unauthorized reproduction or distribution of this AIA® Document, or any portion of it, may result in severe civil and criminal penalties, and will be prosecuted to the maximum extent possible under the law.** This document was produced by AIA software at 12:30:07 on 10/15/2015 under Order No. 3613561640 which expires on 09/28/2016, and is not for resale.
User Notes:
(3B9ADA0B)

CONFORMED

11.3.2
Bonds, Lien
7.3.7.4, 9.10.2, 9.10.3
Bonds, Performance, and Payment
7.3.7.4, 9.6.7, 9.10.3, 11.3.9, 11.4
Building Permit
3.7.1
Capitalization
1.3
Certificate of Substantial Completion
9.8.3, 9.8.4, 9.8.5
Certificates for Payment
4.2.1, 4.2.5, 4.2.9, 9.3.3, 9.4, 9.5, 9.6.1, 9.6.6, 9.7, 9.10.1, 9.10.3, 14.1.1.3, 14.2.4, 15.1.3
Certificates of Inspection, Testing or Approval
13.5.4
Certificates of Insurance
9.10.2, 11.1.3
Change Orders
1.1.1, 2.4, 3.4.2, 3.7.4, 3.8.2.3, 3.11, 3.12.8, 4.2.8, 5.2.3, 7.1.2, 7.1.3, 7.2, 7.3.2, 7.3.6, 7.3.9, 7.3.10, 8.3.1, 9.3.1.1, 9.10.3, 10.3.2, 11.3.1.2, 11.3.4, 11.3.9, 12.1.2, 15.1.3
Change Orders, Definition of
7.2.1
CHANGES IN THE WORK
2.2.1, 3.11, 4.2.8, 7, 7.2.1, 7.3.1, 7.4, 8.3.1, 9.3.1.1, 11.3.9
Claims, Definition of
15.1.1
CLAIMS AND DISPUTES
3.2.4, 6.1.1, 6.3, 7.3.9, 9.3.3, 9.10.4, 10.3.3, 15, 15.4
Claims and Timely Assertion of Claims
15.4.1
Claims for Additional Cost
3.2.4, 3.7.4, 6.1.1, 7.3.9, 10.3.2, 15.1.4
Claims for Additional Time
3.2.4, 3.7.4, 6.1.1, 8.3.2, 10.3.2, 15.1.5
Concealed or Unknown Conditions, Claims for
3.7.4
Claims for Damages
3.2.4, 3.18, 6.1.1, 8.3.3, 9.5.1, 9.6.7, 10.3.3, 11.1.1, 11.3.5, 11.3.7, 14.1.3, 14.2.4, 15.1.6
Claims Subject to Arbitration
15.3.1, 15.4.1
Cleaning Up
3.15, 6.3
Commencement of the Work, Conditions Relating to
2.2.1, 3.2.2, 3.4.1, 3.7.1, 3.10.1, 3.12.6, 5.2.1, 5.2.3, 6.2.2, 8.1.2, 8.2.2, 8.3.1, 11.1, 11.3.1, 11.3.6, 11.4.1, 15.1.4
Commencement of the Work, Definition of
8.1.2
Communications Facilitating Contract Administration
3.9.1, 4.2.4
Completion, Conditions Relating to
3.4.1, 3.11, 3.15, 4.2.2, 4.2.9, 8.2, 9.4.2, 9.8, 9.9.1, 9.10, 12.2, 13.7, 14.1.2
COMPLETION, PAYMENTS AND
9
Completion, Substantial
4.2.9, 8.1.1, 8.1.3, 8.2.3, 9.4.2, 9.8, 9.9.1, 9.10.3, 12.2, 13.7
Compliance with Laws
1.6, 3.2.3, 3.6, 3.7, 3.12.10, 3.13, 4.1.1, 9.6.4, 10.2.2, 11.1, 11.3, 13.1, 13.4, 13.5.1, 13.5.2, 13.6, 14.1.1, 14.2.1.3, 15.2.8, 15.4.2, 15.4.3
Concealed or Unknown Conditions
3.7.4, 4.2.8, 8.3.1, 10.3
Conditions of the Contract
1.1.1, 6.1.1, 6.1.4
Consent, Written
3.4.2, 3.7.4, 3.12.8, 3.14.2, 4.1.2, 9.3.2, 9.8.5, 9.9.1, 9.10.2, 9.10.3, 11.3.1, 13.2, 13.4.2, 15.4.4.2
Consolidation or Joinder
15.4.4
CONSTRUCTION BY OWNER OR BY SEPARATE CONTRACTORS
1.1.4, 6
Construction Change Directive, Definition of
7.3.1
Construction Change Directives
1.1.1, 3.4.2, 3.12.8, 4.2.8, 7.1.1, 7.1.2, 7.1.3, 7.3, 9.3.1.1
Construction Schedules, Contractor's
3.10, 3.12.1, 3.12.2, 6.1.3, 15.1.5.2
Contingent Assignment of Subcontracts
5.4, 14.2.2.2
Continuing Contract Performance
15.1.3
Contract, Definition of
1.1.2
CONTRACT, TERMINATION OR SUSPENSION OF THE
5.4.1.1, 11.3.9, 14
Contract Administration
3.1.3, 4, 9.4, 9.5
Contract Award and Execution, Conditions Relating to
3.7.1, 3.10, 5.2, 6.1, 11.1.3, 11.3.6, 11.4.1
Contract Documents, Copies Furnished and Use of
1.5.2, 2.2.5, 5.3
Contract Documents, Definition of
1.1.1
Contract Sum
3.7.4, 3.8, 5.2.3, 7.2, 7.3, 7.4, 9.1, 9.4.2, 9.5.1.4, 9.6.7, 9.7, 10.3.2, 11.3.1, 14.2.4, 14.3.2, 15.1.4, 15.2.5
Contract Sum, Definition of

AIA Document A201™ – 2007. Copyright © 1911, 1915, 1918, 1925, 1937, 1951, 1958, 1961, 1963, 1966, 1970, 1976, 1987, 1997 and 2007 by The American Institute of Architects. **All rights reserved. WARNING: This AIA® Document is protected by U.S. Copyright Law and International Treaties. Unauthorized reproduction or distribution of this AIA® Document, or any portion of it, may result in severe civil and criminal penalties, and will be prosecuted to the maximum extent possible under the law.** This document was produced by AIA software at 12:30:07 on 10/15/2015 under Order No. 3613561640 which expires on 09/28/2016, and is not for resale.
User Notes:
(3B9ADA0B)

CONFORMED

9.1
Contract Time
3.7.4, 3.7.5, 3.10.2, 5.2.3, 7.2.1.3, 7.3.1, 7.3.5, 7.4, 8.1.1, 8.2.1, 8.3.1, 9.5.1, 9.7, 10.3.2, 12.1.1, 14.3.2, 15.1.5.1, 15.2.5
Contract Time, Definition of
8.1.1
CONTRACTOR
3
Contractor, Definition of
3.1, 6.1.2
Contractor's Construction Schedules
3.10, 3.12.1, 3.12.2, 6.1.3, 15.1.5.2
Contractor's Employees
3.3.2, 3.4.3, 3.8.1, 3.9, 3.18.2, 4.2.3, 4.2.6, 10.2, 10.3, 11.1.1, 11.3.7, 14.1, 14.2.1.1
Contractor's Liability Insurance
11.1
Contractor's Relationship with Separate Contractors and Owner's Forces
3.12.5, 3.14.2, 4.2.4, 6, 11.3.7, 12.1.2, 12.2.4
Contractor's Relationship with Subcontractors
1.2.2, 3.3.2, 3.18.1, 3.18.2, 5, 9.6.2, 9.6.7, 9.10.2, 11.3.1.2, 11.3.7, 11.3.8
Contractor's Relationship with the Architect
1.1.2, 1.5, 3.1.3, 3.2.2, 3.2.3, 3.2.4, 3.3.1, 3.4.2, 3.5, 3.7.4, 3.10, 3.11, 3.12, 3.16, 3.18, 4.1.3, 4.2, 5.2, 6.2.2, 7, 8.3.1, 9.2, 9.3, 9.4, 9.5, 9.7, 9.8, 9.9, 10.2.6, 10.3, 11.3.7, 12, 13.5, 15.1.2, 15.2.1
Contractor's Representations
3.2.1, 3.2.2, 3.5, 3.12.6, 6.2.2, 8.2.1, 9.3.3, 9.8.2
Contractor's Responsibility for Those Performing the Work
3.3.2, 3.18, 5.3, 6.1.3, 6.2, 9.5.1, 10.2.8
Contractor's Review of Contract Documents
3.2
Contractor's Right to Stop the Work
9.7
Contractor's Right to Terminate the Contract
14.1, 15.1.6
Contractor's Submittals
3.10, 3.11, 3.12.4, 4.2.7, 5.2.1, 5.2.3, 9.2, 9.3, 9.8.2, 9.8.3, 9.9.1, 9.10.2, 9.10.3, 11.1.3, 11.4.2
Contractor's Superintendent
3.9, 10.2.6
Contractor's Supervision and Construction Procedures
1.2.2, 3.3, 3.4, 3.12.10, 4.2.2, 4.2.7, 6.1.3, 6.2.4, 7.1.3, 7.3.5, 7.3.7, 8.2, 10, 12, 14, 15.1.3
Contractual Liability Insurance
11.1.1.8, 11.2
Coordination and Correlation
1.2, 3.2.1, 3.3.1, 3.10, 3.12.6, 6.1.3, 6.2.1
Copies Furnished of Drawings and Specifications
1.5, 2.2.5, 3.11
Copyrights
1.5, 3.17
Correction of Work
2.3, 2.4, 3.7.3, 9.4.2, 9.8.2, 9.8.3, 9.9.1, 12.1.2, 12.2
Correlation and Intent of the Contract Documents
1.2
Cost, Definition of
7.3.7
Costs
2.4, 3.2.4, 3.7.3, 3.8.2, 3.15.2, 5.4.2, 6.1.1, 6.2.3, 7.3.3.3, 7.3.7, 7.3.8, 7.3.9, 9.10.2, 10.3.2, 10.3.6, 11.3, 12.1.2, 12.2.1, 12.2.4, 13.5, 14
Cutting and Patching
3.14, 6.2.5
Damage to Construction of Owner or Separate Contractors
3.14.2, 6.2.4, 10.2.1.2, 10.2.5, 10.4, 11.1.1, 11.3, 12.2.4
Damage to the Work
3.14.2, 9.9.1, 10.2.1.2, 10.2.5, 10.4, 11.3.1, 12.2.4
Damages, Claims for
3.2.4, 3.18, 6.1.1, 8.3.3, 9.5.1, 9.6.7, 10.3.3, 11.1.1, 11.3.5, 11.3.7, 14.1.3, 14.2.4, 15.1.6
Damages for Delay
6.1.1, 8.3.3, 9.5.1.6, 9.7, 10.3.2
Date of Commencement of the Work, Definition of
8.1.2
Date of Substantial Completion, Definition of
8.1.3
Day, Definition of
8.1.4
Decisions of the Architect
3.7.4, 4.2.6, 4.2.7, 4.2.11, 4.2.12, 4.2.13, 15.2, 6.3, 7.3.7, 7.3.9, 8.1.3, 8.3.1, 9.2, 9.4, 9.5.1, 9.8.4, 9.9.1, 13.5.2, 14.2.2, 14.2.4, 15.1, 15.2
Decisions to Withhold Certification
9.4.1, 9.5, 9.7, 14.1.1.3
Defective or Nonconforming Work, Acceptance, Rejection and Correction of
2.3, 2.4, 3.5, 4.2.6, 6.2.5, 9.5.1, 9.5.2, 9.6.6, 9.8.2, 9.9.3, 9.10.4, 12.2.1
Definitions
1.1, 2.1.1, 3.1.1, 3.5, 3.12.1, 3.12.2, 3.12.3, 4.1.1, 15.1.1, 5.1, 6.1.2, 7.2.1, 7.3.1, 8.1, 9.1, 9.8.1
Delays and Extensions of Time
3.2, 3.7.4, 5.2.3, 7.2.1, 7.3.1, 7.4, 8.3, 9.5.1, 9.7, 10.3.2, 10.4, 14.3.2, 15.1.5, 15.2.5
Disputes
6.3, 7.3.9, 15.1, 15.2
Documents and Samples at the Site
3.11
Drawings, Definition of

AIA Document A201™ – 2007. Copyright © 1911, 1915, 1918, 1925, 1937, 1951, 1958, 1961, 1963, 1966, 1970, 1976, 1987, 1997 and 2007 by The American Institute of Architects. **All rights reserved.** **WARNING: This AIA® Document is protected by U.S. Copyright Law and International Treaties. Unauthorized reproduction or distribution of this AIA® Document, or any portion of it, may result in severe civil and criminal penalties, and will be prosecuted to the maximum extent possible under the law.** This document was produced by AIA software at 12:30:07 on 10/15/2015 under Order No. 3613561640 which expires on 09/28/2016, and is not for resale.
User Notes: (3B9ADA0B)

CONFORMED

1.1.5
Drawings and Specifications, Use and Ownership of
3.11
Effective Date of Insurance
8.2.2, 11.1.2
Emergencies
10.4, 14.1.1.2, 15.1.4
Employees, Contractor's
3.3.2, 3.4.3, 3.8.1, 3.9, 3.18.2, 4.2.3, 4.2.6, 10.2, 10.3.3, 11.1.1, 11.3.7, 14.1, 14.2.1.1
Equipment, Labor, Materials or
1.1.3, 1.1.6, 3.4, 3.5, 3.8.2, 3.8.3, 3.12, 3.13, 3.15.1, 4.2.6, 4.2.7, 5.2.1, 6.2.1, 7.3.7, 9.3.2, 9.3.3, 9.5.1.3, 9.10.2, 10.2.1, 10.2.4, 14.2.1.1, 14.2.1.2
Execution and Progress of the Work
1.1.3, 1.2.1, 1.2.2, 2.2.3, 2.2.5, 3.1, 3.3.1, 3.4.1, 3.5, 3.7.1, 3.10.1, 3.12, 3.14, 4.2, 6.2.2, 7.1.3, 7.3.5, 8.2, 9.5.1, 9.9.1, 10.2, 10.3, 12.2, 14.2, 14.3.1, 15.1.3
Extensions of Time
3.2.4, 3.7.4, 5.2.3, 7.2.1, 7.3, 7.4, 9.5.1, 9.7, 10.3.2, 10.4, 14.3, 15.1.5, 15.2.5
Failure of Payment
9.5.1.3, 9.7, 9.10.2, 13.6, 14.1.1.3, 14.2.1.2
Faulty Work
(See Defective or Nonconforming Work)
Final Completion and Final Payment
4.2.1, 4.2.9, 9.8.2, 9.10, 11.1.2, 11.1.3, 11.3.1, 11.3.5, 12.3, 14.2.4, 14.4.3
Financial Arrangements, Owner's
2.2.1, 13.2.2, 14.1.1.4
Fire and Extended Coverage Insurance
11.3.1.1
GENERAL PROVISIONS
1
Governing Law
13.1
Guarantees (See Warranty)
Hazardous Materials
10.2.4, 10.3
Identification of Subcontractors and Suppliers
5.2.1
Indemnification
3.17, 3.18, 9.10.2, 10.3.3, 10.3.5, 10.3.6, 11.3.1.2, 11.3.7
Information and Services Required of the Owner
2.1.2, 2.2, 3.2.2, 3.12.4, 3.12.10, 6.1.3, 6.1.4, 6.2.5, 9.6.1, 9.6.4, 9.9.2, 9.10.3, 10.3.3, 11.2, 11.4, 13.5.1, 13.5.2, 14.1.1.4, 14.1.4, 15.1.3
Initial Decision
15.2
Initial Decision Maker, Definition of
1.1.8
Initial Decision Maker, Decisions
14.2.2, 14.2.4, 15.2.1, 15.2.2, 15.2.3, 15.2.4, 15.2.5
Initial Decision Maker, Extent of Authority
14.2.2, 14.2.4, 15.1.3, 15.2.1, 15.2.2, 15.2.3, 15.2.4, 15.2.5
Injury or Damage to Person or Property
10.2.8, 10.4
Inspections
3.1.3, 3.3.3, 3.7.1, 4.2.2, 4.2.6, 4.2.9, 9.4.2, 9.8.3, 9.9.2, 9.10.1, 12.2.1, 13.5
Instructions to Bidders
1.1.1
Instructions to the Contractor
3.2.4, 3.3.1, 3.8.1, 5.2.1, 7, 8.2.2, 12, 13.5.2
Instruments of Service, Definition of
1.1.7
Insurance
3.18.1, 6.1.1, 7.3.7, 9.3.2, 9.8.4, 9.9.1, 9.10.2, 11
Insurance, Boiler and Machinery
11.3.2
Insurance, Contractor's Liability
11.1
Insurance, Effective Date of
8.2.2, 11.1.2
Insurance, Loss of Use
11.3.3
Insurance, Owner's Liability
11.2
Insurance, Property
10.2.5, 11.3
Insurance, Stored Materials
9.3.2
INSURANCE AND BONDS
11
Insurance Companies, Consent to Partial Occupancy
9.9.1
Intent of the Contract Documents
1.2.1, 4.2.7, 4.2.12, 4.2.13, 7.4
Interest
13.6
Interpretation
1.2.3, 1.4, 4.1.1, 5.1, 6.1.2, 15.1.1
Interpretations, Written
4.2.11, 4.2.12, 15.1.4
Judgment on Final Award
15.4.2
Labor and Materials, Equipment
1.1.3, 1.1.6, 3.4, 3.5, 3.8.2, 3.8.3, 3.12, 3.13, 3.15.1, 4.2.6, 4.2.7, 5.2.1, 6.2.1, 7.3.7, 9.3.2, 9.3.3, 9.5.1.3, 9.10.2, 10.2.1, 10.2.4, 14.2.1.1, 14.2.1.2
Labor Disputes
8.3.1
Laws and Regulations

AIA Document A201™ – 2007. Copyright © 1911, 1915, 1918, 1925, 1937, 1951, 1958, 1961, 1963, 1966, 1970, 1976, 1987, 1997 and 2007 by The American Institute of Architects. **All rights reserved. WARNING: This AIA® Document is protected by U.S. Copyright Law and International Treaties. Unauthorized reproduction or distribution of this AIA® Document, or any portion of it, may result in severe civil and criminal penalties, and will be prosecuted to the maximum extent possible under the law.** This document was produced by AIA software at 12:30:07 on 10/15/2015 under Order No. 3613561640 which expires on 09/28/2016, and is not for resale.
User Notes:
(3B9ADA0B)

1.5, 3.2.3, 3.6, 3.7, 3.12.10, 3.13, 4.1.1, 9.6.4, 9.9.1, 10.2.2, 11.1.1, 11.3, 13.1, 13.4, 13.5.1, 13.5.2, 13.6, 14, 15.2.8, 15.4
Liens
2.1.2, 9.3.3, 9.10.2, 9.10.4, 15.2.8
Limitations, Statutes of
12.2.5, 13.7, 15.4.1.1
Limitations of Liability
2.3, 3.2.2, 3.5, 3.12.10, 3.17, 3.18.1, 4.2.6, 4.2.7, 4.2.12, 6.2.2, 9.4.2, 9.6.4, 9.6.7, 10.2.5, 10.3.3, 11.1.2, 11.2, 11.3.7, 12.2.5, 13.4.2
Limitations of Time
2.1.2, 2.2, 2.4, 3.2.2, 3.10, 3.11, 3.12.5, 3.15.1, 4.2.7, 5.2, 5.3, 5.4.1, 6.2.4, 7.3, 7.4, 8.2, 9.2, 9.3.1, 9.3.3, 9.4.1, 9.5, 9.6, 9.7, 9.8, 9.9, 9.10, 11.1.3, 11.3.1.5, 11.3.6, 11.3.10, 12.2, 13.5, 13.7, 14, 15
Loss of Use Insurance
11.3.3
Material Suppliers
1.5, 3.12.1, 4.2.4, 4.2.6, 5.2.1, 9.3, 9.4.2, 9.6, 9.10.5
Materials, Hazardous
10.2.4, 10.3
Materials, Labor, Equipment and
1.1.3, 1.1.6, 1.5.1, 3.4.1, 3.5, 3.8.2, 3.8.3, 3.12, 3.13, 3.15.1, 4.2.6, 4.2.7, 5.2.1, 6.2.1, 7.3.7, 9.3.2, 9.3.3, 9.5.1.3, 9.10.2, 10.2.1.2, 10.2.4, 14.2.1.1, 14.2.1.2
Means, Methods, Techniques, Sequences and Procedures of Construction
3.3.1, 3.12.10, 4.2.2, 4.2.7, 9.4.2
Mechanic's Lien
2.1.2, 15.2.8
Mediation
8.3.1, 10.3.5, 10.3.6, 15.2.1, 15.2.5, 15.2.6, 15.3, 15.4.1
Minor Changes in the Work
1.1.1, 3.12.8, 4.2.8, 7.1, 7.4
MISCELLANEOUS PROVISIONS
13
Modifications, Definition of
1.1.1
Modifications to the Contract
1.1.1, 1.1.2, 3.11, 4.1.2, 4.2.1, 5.2.3, 7, 8.3.1, 9.7, 10.3.2, 11.3.1
Mutual Responsibility
6.2
Nonconforming Work, Acceptance of
9.6.6, 9.9.3, 12.3
Nonconforming Work, Rejection and Correction of
2.3, 2.4, 3.5, 4.2.6, 6.2.4, 9.5.1, 9.8.2, 9.9.3, 9.10.4, 12.2.1
Notice
2.2.1, 2.3, 2.4, 3.2.4, 3.3.1, 3.7.2, 3.12.9, 5.2.1, 9.7, 9.10, 10.2.2, 11.1.3, 12.2.2.1, 13.3, 13.5.1, 13.5.2, 14.1, 14.2, 15.2.8, 15.4.1
Notice, Written
2.3, 2.4, 3.3.1, 3.9.2, 3.12.9, 3.12.10, 5.2.1, 9.7, 9.10, 10.2.2, 10.3, 11.1.3, 11.3.6, 12.2.2.1, 13.3, 14, 15.2.8, 15.4.1
Notice of Claims
3.7.4, 10.2.8, 15.1.2, 15.4
Notice of Testing and Inspections
13.5.1, 13.5.2
Observations, Contractor's
3.2, 3.7.4
Occupancy
2.2.2, 9.6.6, 9.8, 11.3.1.5
Orders, Written
1.1.1, 2.3, 3.9.2, 7, 8.2.2, 11.3.9, 12.1, 12.2.2.1, 13.5.2, 14.3.1
OWNER
2
Owner, Definition of
2.1.1
Owner, Information and Services Required of the
2.1.2, 2.2, 3.2.2, 3.12.10, 6.1.3, 6.1.4, 6.2.5, 9.3.2, 9.6.1, 9.6.4, 9.9.2, 9.10.3, 10.3.3, 11.2, 11.3, 13.5.1, 13.5.2, 14.1.1.4, 14.1.4, 15.1.3
Owner's Authority
1.5, 2.1.1, 2.3, 2.4, 3.4.2, 3.8.1, 3.12.10, 3.14.2, 4.1.2, 4.1.3, 4.2.4, 4.2.9, 5.2.1, 5.2.4, 5.4.1, 6.1, 6.3, 7.2.1, 7.3.1, 8.2.2, 8.3.1, 9.3.1, 9.3.2, 9.5.1, 9.6.4, 9.9.1, 9.10.2, 10.3.2, 11.1.3, 11.3.3, 11.3.10, 12.2.2, 12.3, 13.2.2, 14.3, 14.4, 15.2.7
Owner's Financial Capability
2.2.1, 13.2.2, 14.1.1.4
Owner's Liability Insurance
11.2
Owner's Relationship with Subcontractors
1.1.2, 5.2, 5.3, 5.4, 9.6.4, 9.10.2, 14.2.2
Owner's Right to Carry Out the Work
2.4, 14.2.2
Owner's Right to Clean Up
6.3
Owner's Right to Perform Construction and to Award Separate Contracts
6.1
Owner's Right to Stop the Work
2.3
Owner's Right to Suspend the Work
14.3
Owner's Right to Terminate the Contract
14.2
Ownership and Use of Drawings, Specifications and Other Instruments of Service
1.1.1, 1.1.6, 1.1.7, 1.5, 2.2.5, 3.2.2, 3.11, 3.17, 4.2.12, 5.3
Partial Occupancy or Use

Init.
/

AIA Document A201™ – 2007. Copyright © 1911, 1915, 1918, 1925, 1937, 1951, 1958, 1961, 1963, 1966, 1970, 1976, 1987, 1997 and 2007 by The American Institute of Architects. **All rights reserved.** WARNING: This AIA® Document is protected by U.S. Copyright Law and International Treaties. Unauthorized reproduction or distribution of this AIA® Document, or any portion of it, may result in severe civil and criminal penalties, and will be prosecuted to the maximum extent possible under the law. This document was produced by AIA software at 12:30:07 on 10/15/2015 under Order No. 3613561640 which expires on 09/28/2016, and is not for resale.
User Notes: (3B9ADA0B)

CONFORMED

9.6.6, 9.9, 11.3.1.5
Patching, Cutting and
3.14, 6.2.5
Patents
3.17
Payment, Applications for
4.2.5, 7.3.9, 9.2, 9.3, 9.4, 9.5, 9.6.3, 9.7, 9.8.5, 9.10.1, 14.2.3, 14.2.4, 14.4.3
Payment, Certificates for
4.2.5, 4.2.9, 9.3.3, 9.4, 9.5, 9.6.1, 9.6.6, 9.7, 9.10.1, 9.10.3, 13.7, 14.1.1.3, 14.2.4
Payment, Failure of
9.5.1.3, 9.7, 9.10.2, 13.6, 14.1.1.3, 14.2.1.2
Payment, Final
4.2.1, 4.2.9, 9.8.2, 9.10, 11.1.2, 11.1.3, 11.4.1, 12.3, 13.7, 14.2.4, 14.4.3
Payment Bond, Performance Bond and
7.3.7.4, 9.6.7, 9.10.3, 11.4
Payments, Progress
9.3, 9.6, 9.8.5, 9.10.3, 13.6, 14.2.3, 15.1.3
PAYMENTS AND COMPLETION
9
Payments to Subcontractors
5.4.2, 9.5.1.3, 9.6.2, 9.6.3, 9.6.4, 9.6.7, 14.2.1.2
PCB
10.3.1
Performance Bond and Payment Bond
7.3.7.4, 9.6.7, 9.10.3, 11.4
Permits, Fees, Notices and Compliance with Laws
2.2.2, 3.7, 3.13, 7.3.7.4, 10.2.2
PERSONS AND PROPERTY, PROTECTION OF
10
Polychlorinated Biphenyl
10.3.1
Product Data, Definition of
3.12.2
Product Data and Samples, Shop Drawings
3.11, 3.12, 4.2.7
Progress and Completion
4.2.2, 8.2, 9.8, 9.9.1, 14.1.4, 15.1.3
Progress Payments
9.3, 9.6, 9.8.5, 9.10.3, 13.6, 14.2.3, 15.1.3
Project, Definition of
1.1.4
Project Representatives
4.2.10
Property Insurance
10.2.5, 11.3
PROTECTION OF PERSONS AND PROPERTY
10
Regulations and Laws
1.5, 3.2.3, 3.6, 3.7, 3.12.10, 3.13, 4.1.1, 9.6.4, 9.9.1, 10.2.2, 11.1, 11.4, 13.1, 13.4, 13.5.1, 13.5.2, 13.6, 14, 15.2.8, 15.4
Rejection of Work
3.5, 4.2.6, 12.2.1
Releases and Waivers of Liens
9.10.2
Representations
3.2.1, 3.5, 3.12.6, 6.2.2, 8.2.1, 9.3.3, 9.4.2, 9.5.1, 9.8.2, 9.10.1
Representatives
2.1.1, 3.1.1, 3.9, 4.1.1, 4.2.1, 4.2.2, 4.2.10, 5.1.1, 5.1.2, 13.2.1
Responsibility for Those Performing the Work
3.3.2, 3.18, 4.2.3, 5.3, 6.1.3, 6.2, 6.3, 9.5.1, 10
Retainage
9.3.1, 9.6.2, 9.8.5, 9.9.1, 9.10.2, 9.10.3
Review of Contract Documents and Field Conditions by Contractor
3.2, 3.12.7, 6.1.3
Review of Contractor's Submittals by Owner and Architect
3.10.1, 3.10.2, 3.11, 3.12, 4.2, 5.2, 6.1.3, 9.2, 9.8.2
Review of Shop Drawings, Product Data and Samples by Contractor
3.12
Rights and Remedies
1.1.2, 2.3, 2.4, 3.5, 3.7.4, 3.15.2, 4.2.6, 5.3, 5.4, 6.1, 6.3, 7.3.1, 8.3, 9.5.1, 9.7, 10.2.5, 10.3, 12.2.2, 12.2.4, 13.4, 14, 15.4
Royalties, Patents and Copyrights
3.17
Rules and Notices for Arbitration
15.4.1
Safety of Persons and Property
10.2, 10.4
Safety Precautions and Programs
3.3.1, 4.2.2, 4.2.7, 5.3, 10.1, 10.2, 10.4
Samples, Definition of
3.12.3
Samples, Shop Drawings, Product Data and
3.11, 3.12, 4.2.7
Samples at the Site, Documents and
3.11
Schedule of Values
9.2, 9.3.1
Schedules, Construction
3.10, 3.12.1, 3.12.2, 6.1.3, 15.1.5.2
Separate Contracts and Contractors
1.1.4, 3.12.5, 3.14.2, 4.2.4, 4.2.7, 6, 8.3.1, 12.1.2
Shop Drawings, Definition of
3.12.1
Shop Drawings, Product Data and Samples
3.11, 3.12, 4.2.7
Site, Use of
3.13, 6.1.1, 6.2.1
Site Inspections
3.2.2, 3.3.3, 3.7.1, 3.7.4, 4.2, 9.4.2, 9.10.1, 13.5
Site Visits, Architect's

AIA Document A201™ – 2007. Copyright © 1911, 1915, 1918, 1925, 1937, 1951, 1958, 1961, 1963, 1966, 1970, 1976, 1987, 1997 and 2007 by The American Institute of Architects. All rights reserved. WARNING: This AIA® Document is protected by U.S. Copyright Law and International Treaties. Unauthorized reproduction or distribution of this AIA® Document, or any portion of it, may result in severe civil and criminal penalties, and will be prosecuted to the maximum extent possible under the law. This document was produced by AIA software at 12:30:07 on 10/15/2015 under Order No. 3613561640 which expires on 09/28/2016, and is not for resale.
User Notes:
(3B9ADA0B)

CONFORMED

3.7.4, 4.2.2, 4.2.9, 9.4.2, 9.5.1, 9.9.2, 9.10.1, 13.5
Special Inspections and Testing
4.2.6, 12.2.1, 13.5
Specifications, Definition of
1.1.6
Specifications
1.1.1, 1.1.6, 1.2.2, 1.5, 3.11, 3.12.10, 3.17, 4.2.14
Statute of Limitations
13.7, 15.4.1.1
Stopping the Work
2.3, 9.7, 10.3, 14.1
Stored Materials
6.2.1, 9.3.2, 10.2.1.2, 10.2.4
Subcontractor, Definition of
5.1.1
SUBCONTRACTORS
5
Subcontractors, Work by
1.2.2, 3.3.2, 3.12.1, 4.2.3, 5.2.3, 5.3, 5.4, 9.3.1.2, 9.6.7
Subcontractual Relations
5.3, 5.4, 9.3.1.2, 9.6, 9.10, 10.2.1, 14.1, 14.2.1
Submittals
3.10, 3.11, 3.12, 4.2.7, 5.2.1, 5.2.3, 7.3.7, 9.2, 9.3, 9.8, 9.9.1, 9.10.2, 9.10.3, 11.1.3
Submittal Schedule
3.10.2, 3.12.5, 4.2.7
Subrogation, Waivers of
6.1.1, 11.3.7
Substantial Completion
4.2.9, 8.1.1, 8.1.3, 8.2.3, 9.4.2, 9.8, 9.9.1, 9.10.3, 12.2, 13.7
Substantial Completion, Definition of
9.8.1
Substitution of Subcontractors
5.2.3, 5.2.4
Substitution of Architect
4.1.3
Substitutions of Materials
3.4.2, 3.5, 7.3.8
Sub-subcontractor, Definition of
5.1.2
Subsurface Conditions
3.7.4
Successors and Assigns
13.2
Superintendent
3.9, 10.2.6
Supervision and Construction Procedures
1.2.2, 3.3, 3.4, 3.12.10, 4.2.2, 4.2.7, 6.1.3, 6.2.4, 7.1.3, 7.3.7, 8.2, 8.3.1, 9.4.2, 10, 12, 14, 15.1.3
Surety
5.4.1.2, 9.8.5, 9.10.2, 9.10.3, 14.2.2, 15.2.7
Surety, Consent of
9.10.2, 9.10.3
Surveys
2.2.3
Suspension by the Owner for Convenience
14.3
Suspension of the Work
5.4.2, 14.3
Suspension or Termination of the Contract
5.4.1.1, 14
Taxes
3.6, 3.8.2.1, 7.3.7.4
Termination by the Contractor
14.1, 15.1.6
Termination by the Owner for Cause
5.4.1.1, 14.2, 15.1.6
Termination by the Owner for Convenience
14.4
Termination of the Architect
4.1.3
Termination of the Contractor
14.2.2
TERMINATION OR SUSPENSION OF THE CONTRACT
14
Tests and Inspections
3.1.3, 3.3.3, 4.2.2, 4.2.6, 4.2.9, 9.4.2, 9.8.3, 9.9.2, 9.10.1, 10.3.2, 11.4.1, 12.2.1, 13.5
TIME
8
Time, Delays and Extensions of
3.2.4, 3.7.4, 5.2.3, 7.2.1, 7.3.1, 7.4, 8.3, 9.5.1, 9.7, 10.3.2, 10.4, 14.3.2, 15.1.5, 15.2.5
Time Limits
2.1.2, 2.2, 2.4, 3.2.2, 3.10, 3.11, 3.12.5, 3.15.1, 4.2, 5.2, 5.3, 5.4, 6.2.4, 7.3, 7.4, 8.2, 9.2, 9.3.1, 9.3.3, 9.4.1, 9.5, 9.6, 9.7, 9.8, 9.9, 9.10, 11.1.3, 12.2, 13.5, 13.7, 14, 15.1.2, 15.4
Time Limits on Claims
3.7.4, 10.2.8, 13.7, 15.1.2
Title to Work
9.3.2, 9.3.3
Transmission of Data in Digital Form
1.6
UNCOVERING AND CORRECTION OF WORK
12
Uncovering of Work
12.1
Unforeseen Conditions, Concealed or Unknown
3.7.4, 8.3.1, 10.3
Unit Prices
7.3.3.2, 7.3.4
Use of Documents
1.1.1, 1.5, 2.2.5, 3.12.6, 5.3
Use of Site
3.13, 6.1.1, 6.2.1
Values, Schedule of
9.2, 9.3.1
Waiver of Claims by the Architect

AIA Document A201™ – 2007. Copyright © 1911, 1915, 1918, 1925, 1937, 1951, 1958, 1961, 1963, 1966, 1970, 1976, 1987, 1997 and 2007 by The American Institute of Architects. **All rights reserved.** **WARNING: This AIA® Document is protected by U.S. Copyright Law and International Treaties. Unauthorized reproduction or distribution of this AIA® Document, or any portion of it, may result in severe civil and criminal penalties, and will be prosecuted to the maximum extent possible under the law.** This document was produced by AIA software at 12:30:07 on 10/15/2015 under Order No. 3613561640 which expires on 09/28/2016, and is not for resale.
User Notes:
(3B9ADA0B)

CONFORMED

13.4.2
Waiver of Claims by the Contractor
9.10.5, 13.4.2, 15.1.6
Waiver of Claims by the Owner
9.9.3, 9.10.3, 9.10.4, 12.2.2.1, 13.4.2, 14.2.4, 15.1.6
Waiver of Consequential Damages
14.2.4, 15.1.6
Waiver of Liens
9.10.2, 9.10.4
Waivers of Subrogation
6.1.1, 11.3.7
Warranty
3.5, 4.2.9, 9.3.3, 9.8.4, 9.9.1, 9.10.4, 12.2.2, 13.7
Weather Delays
15.1.5.2
Work, Definition of
1.1.3
Written Consent
1.5.2, 3.4.2, 3.7.4, 3.12.8, 3.14.2, 4.1.2, 9.3.2, 9.8.5, 9.9.1, 9.10.2, 9.10.3, 11.4.1, 13.2, 13.4.2, 15.4.4.2
Written Interpretations
4.2.11, 4.2.12
Written Notice
2.3, 2.4, 3.3.1, 3.9, 3.12.9, 3.12.10, 5.2.1, 8.2.2, 9.7, 9.10, 10.2.2, 10.3, 11.1.3, 12.2.2, 12.2.4, 13.3, 14, 15.4.1
Written Orders
1.1.1, 2.3, 3.9, 7, 8.2.2, 12.1, 12.2, 13.5.2, 14.3.1, 15.1.2

AIA Document A201™ – 2007. Copyright © 1911, 1915, 1918, 1925, 1937, 1951, 1958, 1961, 1963, 1966, 1970, 1976, 1987, 1997 and 2007 by The American Institute of Architects. **All rights reserved. WARNING: This AIA® Document is protected by U.S. Copyright Law and International Treaties. Unauthorized reproduction or distribution of this AIA® Document, or any portion of it, may result in severe civil and criminal penalties, and will be prosecuted to the maximum extent possible under the law.** This document was produced by AIA software at 12:30:07 on 10/15/2015 under Order No. 3613561640 which expires on 09/28/2016, and is not for resale.
User Notes:
(3B9ADA0B)

CONFORMED

ARTICLE 1 GENERAL PROVISIONS

§ 1.1 BASIC DEFINITIONS

§ 1.1.1 THE CONTRACT DOCUMENTS

The Contract Documents are enumerated in the Agreement between the Owner and Contractor (hereinafter the Agreement) and consist of the Agreement, Conditions of the Contract (General, Supplementary and other Conditions), Drawings, Specifications, Addenda issued prior to execution of the Contract, other documents listed in the Agreement and Modifications issued after execution of the Contract. A Modification is (1) a written amendment to the Contract signed by both parties, (2) a Change Order, (3) a Construction Change Directive or (4) a written order for a minor change in the Work issued by the Architect. Unless specifically enumerated in the Agreement, the Contract Documents do not include the advertisement or invitation to bid, Instructions to Bidders, sample forms, other information furnished by the Owner in anticipation of receiving bids or proposals, the Contractor's bid or proposal, or portions of Addenda relating to bidding requirements.

§ 1.1.2 THE CONTRACT

The Contract Documents form the Contract for Construction. The Contract represents the entire and integrated agreement between the parties hereto and supersedes prior negotiations, representations or agreements, either written or oral. The Contract may be amended or modified only by a Modification. The Contract Documents shall not be construed to create a contractual relationship of any kind (1) between the Contractor and the Architect or the Architect's consultants, (2) between the Owner and a Subcontractor or a Sub-subcontractor, (3) between the Owner and the Architect or the Architect's consultants or (4) between any persons or entities other than the Owner and the Contractor. The Architect shall, however, be entitled to performance and enforcement of obligations under the Contract intended to facilitate performance of the Architect's duties.

§ 1.1.3 THE WORK

The term "Work" means the construction and services required by the Contract Documents, whether completed or partially completed, and includes all other labor, materials, equipment and services provided or to be provided by the Contractor to fulfill the Contractor's obligations. The Work may constitute the whole or a part of the Project.

§ 1.1.4 THE PROJECT

The Project is the total construction of which the Work performed under the Contract Documents may be the whole or a part and which may include construction by the Owner and by separate contractors.

§ 1.1.5 THE DRAWINGS

The Drawings are the graphic and pictorial portions of the Contract Documents showing the design, location and dimensions of the Work, generally including plans, elevations, sections, details, schedules and diagrams.

§ 1.1.6 THE SPECIFICATIONS

The Specifications are that portion of the Contract Documents consisting of the written requirements for materials, equipment, systems, standards and workmanship for the Work, and performance of related services.

§ 1.1.7 INSTRUMENTS OF SERVICE

Instruments of Service are representations, in any medium of expression now known or later developed, of the tangible and intangible creative work performed by the Architect and the Architect's consultants under their respective professional services agreements. Instruments of Service may include, without limitation, studies, surveys, models, sketches, drawings, specifications, and other similar materials.

§ 1.1.8 INITIAL DECISION MAKER

The Initial Decision Maker is the person identified in the Agreement to render initial decisions on Claims in accordance with Section 15.2 and certify termination of the Agreement under Section 14.2.2.

AIA Document A201™ – 2007. Copyright © 1911, 1915, 1918, 1925, 1937, 1951, 1958, 1961, 1963, 1966, 1970, 1976, 1987, 1997 and 2007 by The American Institute of Architects. **All rights reserved.** **WARNING: This AIA® Document is protected by U.S. Copyright Law and International Treaties. Unauthorized reproduction or distribution of this AIA® Document, or any portion of it, may result in severe civil and criminal penalties, and will be prosecuted to the maximum extent possible under the law.** This document was produced by AIA software at 12:30:07 on 10/15/2015 under Order No. 3613561640 which expires on 09/28/2016, and is not for resale.
User Notes:
(3B9ADA0B)

CONFORMED

§ 1.2 CORRELATION AND INTENT OF THE CONTRACT DOCUMENTS

§ 1.2.1 The intent of the Contract Documents is to include all items necessary for the proper execution and completion of the Work by the Contractor. The Contract Documents are complementary, and what is required by one shall be as binding as if required by all; performance by the Contractor shall be required only to the extent consistent with the Contract Documents and reasonably inferable from them as being necessary to produce the indicated results.

§ 1.2.2 Organization of the Specifications into divisions, sections and articles, and arrangement of Drawings shall not control the Contractor in dividing the Work among Subcontractors or in establishing the extent of Work to be performed by any trade.

§ 1.2.3 Unless otherwise stated in the Contract Documents, words that have well-known technical or construction industry meanings are used in the Contract Documents in accordance with such recognized meanings.

§ 1.3 CAPITALIZATION

Terms capitalized in these General Conditions include those that are (1) specifically defined, (2) the titles of numbered articles or (3) the titles of other documents published by the American Institute of Architects.

§ 1.4 INTERPRETATION

In the interest of brevity the Contract Documents frequently omit modifying words such as "all" and "any" and articles such as "the" and "an," but the fact that a modifier or an article is absent from one statement and appears in another is not intended to affect the interpretation of either statement.

§ 1.5 OWNERSHIP AND USE OF DRAWINGS, SPECIFICATIONS AND OTHER INSTRUMENTS OF SERVIC E

§ 1.5.1 The Architect and the Architect's consultants shall be deemed the authors and owners of their respective Instruments of Service, including the Drawings and Specifications, and will retain all common law, statutory and other reserved rights, including copyrights. The Contractor, Subcontractors, Sub-subcontractors, and material or equipment suppliers shall not own or claim a copyright in the Instruments of Service. Submittal or distribution to meet official regulatory requirements or for other purposes in connection with this Project is not to be construed as publication in derogation of the Architect's or Architect's consultants' reserved rights.

§ 1.5.2 The Contractor, Subcontractors, Sub-subcontractors and material or equipment suppliers are authorized to use and reproduce the Instruments of Service provided to them solely and exclusively for execution of the Work. All copies made under this authorization shall bear the copyright notice, if any, shown on the Instruments of Service. The Contractor, Subcontractors, Sub-subcontractors, and material or equipment suppliers may not use the Instruments of Service on other projects or for additions to this Project outside the scope of the Work without the specific written consent of the Owner, Architect and the Architect's consultants.

§ 1.6 TRANSMISSION OF DATA IN DIGITAL FORM

If the parties intend to transmit Instruments of Service or any other information or documentation in digital form, they shall endeavor to establish necessary protocols governing such transmissions, unless otherwise already provided in the Agreement or the Contract Documents.

ARTICLE 2 OWNER

§ 2.1 GENERAL

§ 2.1.1 The Owner is the person or entity identified as such in the Agreement and is referred to throughout the Contract Documents as if singular in number. The Owner shall designate in writing a representative who shall have express authority to bind the Owner with respect to all matters requiring the Owner's approval or authorization. Except as otherwise provided in Section 4.2.1, the Architect does not have such authority. The term "Owner" means the Owner or the Owner's authorized representative.

AIA Document A201™ – 2007. Copyright © 1911, 1915, 1918, 1925, 1937, 1951, 1958, 1961, 1963, 1966, 1970, 1976, 1987, 1997 and 2007 by The American Institute of Architects. **All rights reserved. WARNING: This AIA® Document is protected by U.S. Copyright Law and International Treaties. Unauthorized reproduction or distribution of this AIA® Document, or any portion of it, may result in severe civil and criminal penalties, and will be prosecuted to the maximum extent possible under the law.** This document was produced by AIA software at 12:30:07 on 10/15/2015 under Order No. 3613561640 which expires on 09/28/2016, and is not for resale.
User Notes:
(3B9ADA0B)

CONFORMED

§ 2.1.2 The Owner shall furnish to the Contractor within fifteen days after receipt of a written request, information necessary and relevant for the Contractor to evaluate, give notice of or enforce mechanic's lien rights. Such information shall include a correct statement of the record legal title to the property on which the Project is located, usually referred to as the site, and the Owner's interest therein.

§ 2.2 INFORMATION AND SERVICES REQUIRED OF THE OWNER

§ 2.2.1 Prior to commencement of the Work, the Contractor may request in writing that the Owner provide reasonable evidence that the Owner has made financial arrangements to fulfill the Owner's obligations under the Contract. Thereafter, the Contractor may only request such evidence if (1) the Owner fails to make payments to the Contractor as the Contract Documents require; (2) a change in the Work materially changes the Contract Sum; or (3) the Contractor identifies in writing a reasonable concern regarding the Owner's ability to make payment when due. The Owner shall furnish such evidence as a condition precedent to commencement or continuation of the Work or the portion of the Work affected by a material change. After the Owner furnishes the evidence, the Owner shall not materially vary such financial arrangements without prior notice to the Contractor.

§ 2.2.2 Except for permits and fees that are the responsibility of the Contractor under the Contract Documents, including those required under Section 3.7.1, the Owner shall secure and pay for necessary approvals, easements, assessments and charges required for construction, use or occupancy of permanent structures or for permanent changes in existing facilities.

§ 2.2.3 The Owner shall furnish surveys describing physical characteristics, legal limitations and utility locations for the site of the Project, and a legal description of the site. The Contractor shall be entitled to rely on the accuracy of information furnished by the Owner but shall exercise proper precautions relating to the safe performance of the Work.

§ 2.2.4 The Owner shall furnish information or services required of the Owner by the Contract Documents with reasonable promptness. The Owner shall also furnish any other information or services under the Owner's control and relevant to the Contractor's performance of the Work with reasonable promptness after receiving the Contractor's written request for such information or services.

§ 2.2.5 Unless otherwise provided in the Contract Documents, the Owner shall furnish to the Contractor one copy of the Contract Documents for purposes of making reproductions pursuant to Section 1.5.2.

§ 2.3 OWNER'S RIGHT TO STOP THE WORK

If the Contractor fails to correct Work that is not in accordance with the requirements of the Contract Documents as required by Section 12.2 or repeatedly fails to carry out Work in accordance with the Contract Documents, the Owner may issue a written order to the Contractor to stop the Work, or any portion thereof, until the cause for such order has been eliminated; however, the right of the Owner to stop the Work shall not give rise to a duty on the part of the Owner to exercise this right for the benefit of the Contractor or any other person or entity, except to the extent required by Section 6.1.3.

§ 2.4 OWNER'S RIGHT TO CARRY OUT THE WORK

If the Contractor defaults or neglects to carry out the Work in accordance with the Contract Documents and fails within a ten-day period after receipt of written notice from the Owner to commence and continue correction of such default or neglect with diligence and promptness, the Owner may, without prejudice to other remedies the Owner may have, correct such deficiencies. In such case an appropriate Change Order shall be issued deducting from payments then or thereafter due the Contractor the reasonable cost of correcting such deficiencies, including Owner's expenses and compensation for the Architect's additional services made necessary by such default, neglect or failure. Such action by the Owner and amounts charged to the Contractor are both subject to prior approval of the Architect. If payments then or thereafter due the Contractor are not sufficient to cover such amounts, the Contractor shall pay the difference to the Owner.

AIA Document A201™ – 2007. Copyright © 1911, 1915, 1918, 1925, 1937, 1951, 1958, 1961, 1963, 1966, 1970, 1976, 1987, 1997 and 2007 by The American Institute of Architects. **All rights reserved.** **WARNING: This AIA® Document is protected by U.S. Copyright Law and International Treaties. Unauthorized reproduction or distribution of this AIA® Document, or any portion of it, may result in severe civil and criminal penalties, and will be prosecuted to the maximum extent possible under the law.** This document was produced by AIA software at 12:30:07 on 10/15/2015 under Order No. 3613561640 which expires on 09/28/2016, and is not for resale.
User Notes: (3B9ADA0B)

CONFORMED

ARTICLE 3 CONTRACTOR

§ 3.1 GENERAL

§ 3.1.1 The Contractor is the person or entity identified as such in the Agreement and is referred to throughout the Contract Documents as if singular in number. The Contractor shall be lawfully licensed, if required in the jurisdiction where the Project is located. The Contractor shall designate in writing a representative who shall have express authority to bind the Contractor with respect to all matters under this Contract. The term "Contractor" means the Contractor or the Contractor's authorized representative.

§ 3.1.2 The Contractor shall perform the Work in accordance with the Contract Documents.

§ 3.1.3 The Contractor shall not be relieved of obligations to perform the Work in accordance with the Contract Documents either by activities or duties of the Architect in the Architect's administration of the Contract, or by tests, inspections or approvals required or performed by persons or entities other than the Contractor.

§ 3.2 REVIEW OF CONTRACT DOCUMENTS AND FIELD CONDITIONS BY CONTRACTOR

§ 3.2.1 Execution of the Contract by the Contractor is a representation that the Contractor has visited the site, become generally familiar with local conditions under which the Work is to be performed and correlated personal observations with requirements of the Contract Documents.

§ 3.2.2 Because the Contract Documents are complementary, the Contractor shall, before starting each portion of the Work, carefully study and compare the various Contract Documents relative to that portion of the Work, as well as the information furnished by the Owner pursuant to Section 2.2.3, shall take field measurements of any existing conditions related to that portion of the Work, and shall observe any conditions at the site affecting it. These obligations are for the purpose of facilitating coordination and construction by the Contractor and are not for the purpose of discovering errors, omissions, or inconsistencies in the Contract Documents; however, the Contractor shall promptly report to the Architect any errors, inconsistencies or omissions discovered by or made known to the Contractor as a request for information in such form as the Architect may require. It is recognized that the Contractor's review is made in the Contractor's capacity as a contractor and not as a licensed design professional, unless otherwise specifically provided in the Contract Documents.

§ 3.2.3 The Contractor is not required to ascertain that the Contract Documents are in accordance with applicable laws, statutes, ordinances, codes, rules and regulations, or lawful orders of public authorities, but the Contractor shall promptly report to the Architect any nonconformity discovered by or made known to the Contractor as a request for information in such form as the Architect may require.

§ 3.2.4 If the Contractor believes that additional cost or time is involved because of clarifications or instructions the Architect issues in response to the Contractor's notices or requests for information pursuant to Sections 3.2.2 or 3.2.3, the Contractor shall make Claims as provided in Article 15. If the Contractor fails to perform the obligations of Sections 3.2.2 or 3.2.3, the Contractor shall pay such costs and damages to the Owner as would have been avoided if the Contractor had performed such obligations. If the Contractor performs those obligations, the Contractor shall not be liable to the Owner or Architect for damages resulting from errors, inconsistencies or omissions in the Contract Documents, for differences between field measurements or conditions and the Contract Documents, or for nonconformities of the Contract Documents to applicable laws, statutes, ordinances, codes, rules and regulations, and lawful orders of public authorities.

§ 3.3 SUPERVISION AND CONSTRUCTION PROCEDURES

§ 3.3.1 The Contractor shall supervise and direct the Work, using the Contractor's best skill and attention. The Contractor shall be solely responsible for, and have control over, construction means, methods, techniques, sequences and procedures and for coordinating all portions of the Work under the Contract, unless the Contract Documents give other specific instructions concerning these matters. If the Contract Documents give specific instructions concerning construction means, methods, techniques, sequences or procedures, the Contractor shall evaluate the jobsite safety thereof and, except as stated below, shall be fully and solely responsible for the jobsite safety of such means, methods, techniques, sequences or procedures. If the Contractor determines that such means, methods, techniques, sequences or

AIA Document A201™ – 2007. Copyright © 1911, 1915, 1918, 1925, 1937, 1951, 1958, 1961, 1963, 1966, 1970, 1976, 1987, 1997 and 2007 by The American Institute of Architects. All rights reserved. WARNING: This AIA® Document is protected by U.S. Copyright Law and International Treaties. Unauthorized reproduction or distribution of this AIA® Document, or any portion of it, may result in severe civil and criminal penalties, and will be prosecuted to the maximum extent possible under the law. This document was produced by AIA software at 12:30:07 on 10/15/2015 under Order No. 3613561640 which expires on 09/28/2016, and is not for resale.
User Notes:
(3B9ADA0B)

CONFORMED

procedures may not be safe, the Contractor shall give timely written notice to the Owner and Architect and shall not proceed with that portion of the Work without further written instructions from the Architect. If the Contractor is then instructed to proceed with the required means, methods, techniques, sequences or procedures without acceptance of changes proposed by the Contractor, the Owner shall be solely responsible for any loss or damage arising solely from those Owner-required means, methods, techniques, sequences or procedures.

§ 3.3.2 The Contractor shall be responsible to the Owner for acts and omissions of the Contractor's employees, Subcontractors and their agents and employees, and other persons or entities performing portions of the Work for, or on behalf of, the Contractor or any of its Subcontractors.

§ 3.3.3 The Contractor shall be responsible for inspection of portions of Work already performed to determine that such portions are in proper condition to receive subsequent Work.

§ 3.4 LABOR AND MATERIALS

§ 3.4.1 Unless otherwise provided in the Contract Documents, the Contractor shall provide and pay for labor, materials, equipment, tools, construction equipment and machinery, water, heat, utilities, transportation, and other facilities and services necessary for proper execution and completion of the Work, whether temporary or permanent and whether or not incorporated or to be incorporated in the Work.

§ 3.4.2 Except in the case of minor changes in the Work authorized by the Architect in accordance with Sections 3.12.8 or 7.4, the Contractor may make substitutions only with the consent of the Owner, after evaluation by the Architect and in accordance with a Change Order or Construction Change Directive.

§ 3.4.3 The Contractor shall enforce strict discipline and good order among the Contractor's employees and other persons carrying out the Work. The Contractor shall not permit employment of unfit persons or persons not properly skilled in tasks assigned to them.

§ 3.5 WARRANTY

The Contractor warrants to the Owner and Architect that materials and equipment furnished under the Contract will be of good quality and new unless the Contract Documents require or permit otherwise. The Contractor further warrants that the Work will conform to the requirements of the Contract Documents and will be free from defects, except for those inherent in the quality of the Work the Contract Documents require or permit. Work, materials, or equipment not conforming to these requirements may be considered defective. The Contractor's warranty excludes remedy for damage or defect caused by abuse, alterations to the Work not executed by the Contractor, improper or insufficient maintenance, improper operation, or normal wear and tear and normal usage. If required by the Architect, the Contractor shall furnish satisfactory evidence as to the kind and quality of materials and equipment.

§ 3.6 TAXES

The Contractor shall pay sales, consumer, use and similar taxes for the Work provided by the Contractor that are legally enacted when bids are received or negotiations concluded, whether or not yet effective or merely scheduled to go into effect.

§ 3.7 PERMITS, FEES, NOTICES AND COMPLIANCE WITH LAWS

§ 3.7.1 Unless otherwise provided in the Contract Documents, the Contractor shall secure and pay for the building permit as well as for other permits, fees, licenses, and inspections by government agencies necessary for proper execution and completion of the Work that are customarily secured after execution of the Contract and legally required at the time bids are received or negotiations concluded.

§ 3.7.2 The Contractor shall comply with and give notices required by applicable laws, statutes, ordinances, codes, rules and regulations, and lawful orders of public authorities applicable to performance of the Work.

AIA Document A201™ – 2007. Copyright © 1911, 1915, 1918, 1925, 1937, 1951, 1958, 1961, 1963, 1966, 1970, 1976, 1987, 1997 and 2007 by The American Institute of Architects. **All rights reserved. WARNING: This AIA® Document is protected by U.S. Copyright Law and International Treaties. Unauthorized reproduction or distribution of this AIA® Document, or any portion of it, may result in severe civil and criminal penalties, and will be prosecuted to the maximum extent possible under the law.** This document was produced by AIA software at 12:30:07 on 10/15/2015 under Order No. 3613561640 which expires on 09/28/2016, and is not for resale.
User Notes:
(3B9ADA0B)

CONFORMED

§ 3.7.3 If the Contractor performs Work knowing it to be contrary to applicable laws, statutes, ordinances, codes, rules and regulations, or lawful orders of public authorities, the Contractor shall assume appropriate responsibility for such Work and shall bear the costs attributable to correction.

§ 3.7.4 Concealed or Unknown Conditions. If the Contractor encounters conditions at the site that are (1) subsurface or otherwise concealed physical conditions that differ materially from those indicated in the Contract Documents or (2) unknown physical conditions of an unusual nature, that differ materially from those ordinarily found to exist and generally recognized as inherent in construction activities of the character provided for in the Contract Documents, the Contractor shall promptly provide notice to the Owner and the Architect before conditions are disturbed and in no event later than 21 days after first observance of the conditions. The Architect will promptly investigate such conditions and, if the Architect determines that they differ materially and cause an increase or decrease in the Contractor's cost of, or time required for, performance of any part of the Work, will recommend an equitable adjustment in the Contract Sum or Contract Time, or both. If the Architect determines that the conditions at the site are not materially different from those indicated in the Contract Documents and that no change in the terms of the Contract is justified, the Architect shall promptly notify the Owner and Contractor in writing, stating the reasons. If either party disputes the Architect's determination or recommendation, that party may proceed as provided in Article 15.

§ 3.7.5 If, in the course of the Work, the Contractor encounters human remains or recognizes the existence of burial markers, archaeological sites or wetlands not indicated in the Contract Documents, the Contractor shall immediately suspend any operations that would affect them and shall notify the Owner and Architect. Upon receipt of such notice, the Owner shall promptly take any action necessary to obtain governmental authorization required to resume the operations. The Contractor shall continue to suspend such operations until otherwise instructed by the Owner but shall continue with all other operations that do not affect those remains or features. Requests for adjustments in the Contract Sum and Contract Time arising from the existence of such remains or features may be made as provided in Article 15.

§ 3.8 ALLOWANCES

§ 3.8.1 The Contractor shall include in the Contract Sum all allowances stated in the Contract Documents. Items covered by allowances shall be supplied for such amounts and by such persons or entities as the Owner may direct, but the Contractor shall not be required to employ persons or entities to whom the Contractor has reasonable objection.

§ 3.8.2 Unless otherwise provided in the Contract Documents,

- **.1** Allowances shall cover the cost to the Contractor of materials and equipment delivered at the site and all required taxes, less applicable trade discounts;
- **.2** Contractor's costs for unloading and handling at the site, labor, installation costs, overhead, profit and other expenses contemplated for stated allowance amounts shall be included in the Contract Sum but not in the allowances; and
- **.3** Whenever costs are more than or less than allowances, the Contract Sum shall be adjusted accordingly by Change Order. The amount of the Change Order shall reflect (1) the difference between actual costs and the allowances under Section 3.8.2.1 and (2) changes in Contractor's costs under Section 3.8.2.2.

§ 3.8.3 Materials and equipment under an allowance shall be selected by the Owner with reasonable promptness.

§ 3.9 SUPERINTENDENT

§ 3.9.1 The Contractor shall employ a competent superintendent and necessary assistants who shall be in attendance at the Project site during performance of the Work. The superintendent shall represent the Contractor, and communications given to the superintendent shall be as binding as if given to the Contractor.

§ 3.9.2 The Contractor, as soon as practicable after award of the Contract, shall furnish in writing to the Owner through the Architect the name and qualifications of a proposed superintendent. The Architect may reply within 14 days to the Contractor in writing stating (1) whether the Owner or the Architect has

Init.
/
AIA Document A201™ – 2007. Copyright © 1911, 1915, 1918, 1925, 1937, 1951, 1958, 1961, 1963, 1966, 1970, 1976, 1987, 1997 and 2007 by The American Institute of Architects. **All rights reserved. WARNING: This AIA® Document is protected by U.S. Copyright Law and International Treaties. Unauthorized reproduction or distribution of this AIA® Document, or any portion of it, may result in severe civil and criminal penalties, and will be prosecuted to the maximum extent possible under the law.** This document was produced by AIA software at 12:30:07 on 10/15/2015 under Order No. 3613561640 which expires on 09/28/2016, and is not for resale.
User Notes:
(3B9ADA0B)

CONFORMED

reasonable objection to the proposed superintendent or (2) that the Architect requires additional time to review. Failure of the Architect to reply within the 14 day period shall constitute notice of no reasonable objection.

§ 3.9.3 The Contractor shall not employ a proposed superintendent to whom the Owner or Architect has made reasonable and timely objection. The Contractor shall not change the superintendent without the Owner's consent, which shall not unreasonably be withheld or delayed.

§ 3.10 CONTRACTOR'S CONSTRUCTION SCHEDULES

§ 3.10.1 The Contractor, promptly after being awarded the Contract, shall prepare and submit for the Owner's and Architect's information a Contractor's construction schedule for the Work. The schedule shall not exceed time limits current under the Contract Documents, shall be revised at appropriate intervals as required by the conditions of the Work and Project, shall be related to the entire Project to the extent required by the Contract Documents, and shall provide for expeditious and practicable execution of the Work.

§ 3.10.2 The Contractor shall prepare a submittal schedule, promptly after being awarded the Contract and thereafter as necessary to maintain a current submittal schedule, and shall submit the schedule(s) for the Architect's approval. The Architect's approval shall not unreasonably be delayed or withheld. The submittal schedule shall (1) be coordinated with the Contractor's construction schedule, and (2) allow the Architect reasonable time to review submittals. If the Contractor fails to submit a submittal schedule, the Contractor shall not be entitled to any increase in Contract Sum or extension of Contract Time based on the time required for review of submittals.

§ 3.10.3 The Contractor shall perform the Work in general accordance with the most recent schedules submitted to the Owner and Architect.

§ 3.11 DOCUMENTS AND SAMPLES AT THE SITE

The Contractor shall maintain at the site for the Owner one copy of the Drawings, Specifications, Addenda, Change Orders and other Modifications, in good order and marked currently to indicate field changes and selections made during construction, and one copy of approved Shop Drawings, Product Data, Samples and similar required submittals. These shall be available to the Architect and shall be delivered to the Architect for submittal to the Owner upon completion of the Work as a record of the Work as constructed.

§ 3.12 SHOP DRAWINGS, PRODUCT DATA AND SAMPLES

§ 3.12.1 Shop Drawings are drawings, diagrams, schedules and other data specially prepared for the Work by the Contractor or a Subcontractor, Sub-subcontractor, manufacturer, supplier or distributor to illustrate some portion of the Work.

§ 3.12.2 Product Data are illustrations, standard schedules, performance charts, instructions, brochures, diagrams and other information furnished by the Contractor to illustrate materials or equipment for some portion of the Work.

§ 3.12.3 Samples are physical examples that illustrate materials, equipment or workmanship and establish standards by which the Work will be judged.

§ 3.12.4 Shop Drawings, Product Data, Samples and similar submittals are not Contract Documents. Their purpose is to demonstrate the way by which the Contractor proposes to conform to the information given and the design concept expressed in the Contract Documents for those portions of the Work for which the Contract Documents require submittals. Review by the Architect is subject to the limitations of Section 4.2.7. Informational submittals upon which the Architect is not expected to take responsive action may be so identified in the Contract Documents. Submittals that are not required by the Contract Documents may be returned by the Architect without action.

§ 3.12.5 The Contractor shall review for compliance with the Contract Documents, approve and submit to the Architect Shop Drawings, Product Data, Samples and similar submittals required by the Contract

AIA Document A201™ – 2007. Copyright © 1911, 1915, 1918, 1925, 1937, 1951, 1958, 1961, 1963, 1966, 1970, 1976, 1987, 1997 and 2007 by The American Institute of Architects. **All rights reserved. WARNING: This AIA® Document is protected by U.S. Copyright Law and International Treaties. Unauthorized reproduction or distribution of this AIA® Document, or any portion of it, may result in severe civil and criminal penalties, and will be prosecuted to the maximum extent possible under the law.** This document was produced by AIA software at 12:30:07 on 10/15/2015 under Order No. 3613561640 which expires on 09/28/2016, and is not for resale.
User Notes:
(3B9ADA0B)

CONFORMED

Documents in accordance with the submittal schedule approved by the Architect or, in the absence of an approved submittal schedule, with reasonable promptness and in such sequence as to cause no delay in the Work or in the activities of the Owner or of separate contractors.

§ 3.12.6 By submitting Shop Drawings, Product Data, Samples and similar submittals, the Contractor represents to the Owner and Architect that the Contractor has (1) reviewed and approved them, (2) determined and verified materials, field measurements and field construction criteria related thereto, or will do so and (3) checked and coordinated the information contained within such submittals with the requirements of the Work and of the Contract Documents.

§ 3.12.7 The Contractor shall perform no portion of the Work for which the Contract Documents require submittal and review of Shop Drawings, Product Data, Samples or similar submittals until the respective submittal has been approved by the Architect.

§ 3.12.8 The Work shall be in accordance with approved submittals except that the Contractor shall not be relieved of responsibility for deviations from requirements of the Contract Documents by the Architect's approval of Shop Drawings, Product Data, Samples or similar submittals unless the Contractor has specifically informed the Architect in writing of such deviation at the time of submittal and (1) the Architect has given written approval to the specific deviation as a minor change in the Work, or (2) a Change Order or Construction Change Directive has been issued authorizing the deviation. The Contractor shall not be relieved of responsibility for errors or omissions in Shop Drawings, Product Data, Samples or similar submittals by the Architect's approval thereof.

§ 3.12.9 The Contractor shall direct specific attention, in writing or on resubmitted Shop Drawings, Product Data, Samples or similar submittals, to revisions other than those requested by the Architect on previous submittals. In the absence of such written notice, the Architect's approval of a resubmission shall not apply to such revisions.

§ 3.12.10 The Contractor shall not be required to provide professional services that constitute the practice of architecture or engineering unless such services are specifically required by the Contract Documents for a portion of the Work or unless the Contractor needs to provide such services in order to carry out the Contractor's responsibilities for construction means, methods, techniques, sequences and procedures. The Contractor shall not be required to provide professional services in violation of applicable law. If professional design services or certifications by a design professional related to systems, materials or equipment are specifically required of the Contractor by the Contract Documents, the Owner and the Architect will specify all performance and design criteria that such services must satisfy. The Contractor shall cause such services or certifications to be provided by a properly licensed design professional, whose signature and seal shall appear on all drawings, calculations, specifications, certifications, Shop Drawings and other submittals prepared by such professional. Shop Drawings and other submittals related to the Work designed or certified by such professional, if prepared by others, shall bear such professional's written approval when submitted to the Architect. The Owner and the Architect shall be entitled to rely upon the adequacy, accuracy and completeness of the services, certifications and approvals performed or provided by such design professionals, provided the Owner and Architect have specified to the Contractor all performance and design criteria that such services must satisfy. Pursuant to this Section 3.12.10, the Architect will review, approve or take other appropriate action on submittals only for the limited purpose of checking for conformance with information given and the design concept expressed in the Contract Documents. The Contractor shall not be responsible for the adequacy of the performance and design criteria specified in the Contract Documents.

§ 3.13 USE OF SITE

The Contractor shall confine operations at the site to areas permitted by applicable laws, statutes, ordinances, codes, rules and regulations, and lawful orders of public authorities and the Contract Documents and shall not unreasonably encumber the site with materials or equipment.

§ 3.14 CUTTING AND PATCHING

§ 3.14.1 The Contractor shall be responsible for cutting, fitting or patching required to complete the Work or to make its parts fit together properly. All areas requiring cutting, fitting and patching shall be restored

AIA Document A201™ – 2007. Copyright © 1911, 1915, 1918, 1925, 1937, 1951, 1958, 1961, 1963, 1966, 1970, 1976, 1987, 1997 and 2007 by The American Institute of Architects. All rights reserved. WARNING: This AIA® Document is protected by U.S. Copyright Law and International Treaties. Unauthorized reproduction or distribution of this AIA® Document, or any portion of it, may result in severe civil and criminal penalties, and will be prosecuted to the maximum extent possible under the law. This document was produced by AIA software at 12:30:07 on 10/15/2015 under Order No. 3613561640 which expires on 09/28/2016, and is not for resale.
User Notes:
(3B9ADA0B)

to the condition existing prior to the cutting, fitting and patching, unless otherwise required by the Contract Documents.

§ 3.14.2 The Contractor shall not damage or endanger a portion of the Work or fully or partially completed construction of the Owner or separate contractors by cutting, patching or otherwise altering such construction, or by excavation. The Contractor shall not cut or otherwise alter such construction by the Owner or a separate contractor except with written consent of the Owner and of such separate contractor; such consent shall not be unreasonably withheld. The Contractor shall not unreasonably withhold from the Owner or a separate contractor the Contractor's consent to cutting or otherwise altering the Work.

§ 3.15 CLEANING UP

§ 3.15.1 The Contractor shall keep the premises and surrounding area free from accumulation of waste materials or rubbish caused by operations under the Contract. At completion of the Work, the Contractor shall remove waste materials, rubbish, the Contractor's tools, construction equipment, machinery and surplus materials from and about the Project.

§ 3.15.2 If the Contractor fails to clean up as provided in the Contract Documents, the Owner may do so and Owner shall be entitled to reimbursement from the Contractor.

§ 3.16 ACCESS TO WORK

The Contractor shall provide the Owner and Architect access to the Work in preparation and progress wherever located.

§ 3.17 ROYALTIES, PATENTS AND COPYRIGHTS

The Contractor shall pay all royalties and license fees. The Contractor shall defend suits or claims for infringement of copyrights and patent rights and shall hold the Owner and Architect harmless from loss on account thereof, but shall not be responsible for such defense or loss when a particular design, process or product of a particular manufacturer or manufacturers is required by the Contract Documents, or where the copyright violations are contained in Drawings, Specifications or other documents prepared by the Owner or Architect. However, if the Contractor has reason to believe that the required design, process or product is an infringement of a copyright or a patent, the Contractor shall be responsible for such loss unless such information is promptly furnished to the Architect.

§ 3.18 INDEMNIFICATION

§ 3.18.1 To the fullest extent permitted by law the Contractor shall indemnify and hold harmless the Owner, Architect, Architect's consultants, and agents and employees of any of them from and against claims, damages, losses and expenses, including but not limited to attorneys' fees, arising out of or resulting from performance of the Work, provided that such claim, damage, loss or expense is attributable to bodily injury, sickness, disease or death, or to injury to or destruction of tangible property (other than the Work itself), but only to the extent caused by the negligent acts or omissions of the Contractor, a Subcontractor, anyone directly or indirectly employed by them or anyone for whose acts they may be liable, regardless of whether or not such claim, damage, loss or expense is caused in part by a party indemnified hereunder. Such obligation shall not be construed to negate, abridge, or reduce other rights or obligations of indemnity that would otherwise exist as to a party or person described in this Section 3.18.

§ 3.18.2 In claims against any person or entity indemnified under this Section 3.18 by an employee of the Contractor, a Subcontractor, anyone directly or indirectly employed by them or anyone for whose acts they may be liable, the indemnification obligation under Section 3.18.1 shall not be limited by a limitation on amount or type of damages, compensation or benefits payable by or for the Contractor or a Subcontractor under workers' compensation acts, disability benefit acts or other employee benefit acts.

ARTICLE 4 ARCHITECT

§ 4.1 GENERAL

§ 4.1.1 The Owner shall retain an architect lawfully licensed to practice architecture or an entity lawfully practicing architecture in the jurisdiction where the Project is located. That person or entity is identified as

AIA Document A201™ – 2007. Copyright © 1911, 1915, 1918, 1925, 1937, 1951, 1958, 1961, 1963, 1966, 1970, 1976, 1987, 1997 and 2007 by The American Institute of Architects. **All rights reserved. WARNING: This AIA® Document is protected by U.S. Copyright Law and International Treaties. Unauthorized reproduction or distribution of this AIA® Document, or any portion of it, may result in severe civil and criminal penalties, and will be prosecuted to the maximum extent possible under the law.** This document was produced by AIA software at 12:30:07 on 10/15/2015 under Order No. 3613561640 which expires on 09/28/2016, and is not for resale.
User Notes: (3B9ADA0B)

CONFORMED

the Architect in the Agreement and is referred to throughout the Contract Documents as if singular in number.

§ 4.1.2 Duties, responsibilities and limitations of authority of the Architect as set forth in the Contract Documents shall not be restricted, modified or extended without written consent of the Owner, Contractor and Architect. Consent shall not be unreasonably withheld.

§ 4.1.3 If the employment of the Architect is terminated, the Owner shall employ a successor architect as to whom the Contractor has no reasonable objection and whose status under the Contract Documents shall be that of the Architect.

§ 4.2 ADMINISTRATION OF THE CONTRACT

§ 4.2.1 The Architect will provide administration of the Contract as described in the Contract Documents and will be an Owner's representative during construction until the date the Architect issues the final Certificate for Payment. The Architect will have authority to act on behalf of the Owner only to the extent provided in the Contract Documents.

§ 4.2.2 The Architect will visit the site at intervals appropriate to the stage of construction, or as otherwise agreed with the Owner, to become generally familiar with the progress and quality of the portion of the Work completed, and to determine in general if the Work observed is being performed in a manner indicating that the Work, when fully completed, will be in accordance with the Contract Documents. However, the Architect will not be required to make exhaustive or continuous on-site inspections to check the quality or quantity of the Work. The Architect will not have control over, charge of, or responsibility for, the construction means, methods, techniques, sequences or procedures, or for the safety precautions and programs in connection with the Work, since these are solely the Contractor's rights and responsibilities under the Contract Documents, except as provided in Section 3.3.1.

§ 4.2.3 On the basis of the site visits, the Architect will keep the Owner reasonably informed about the progress and quality of the portion of the Work completed, and report to the Owner (1) known deviations from the Contract Documents and from the most recent construction schedule submitted by the Contractor, and (2) defects and deficiencies observed in the Work. The Architect will not be responsible for the Contractor's failure to perform the Work in accordance with the requirements of the Contract Documents. The Architect will not have control over or charge of and will not be responsible for acts or omissions of the Contractor, Subcontractors, or their agents or employees, or any other persons or entities performing portions of the Work.

§ 4.2.4 COMMUNICATIONS FACILITATING CONTRACT ADMINISTRATION

Except as otherwise provided in the Contract Documents or when direct communications have been specially authorized, the Owner and Contractor shall endeavor to communicate with each other through the Architect about matters arising out of or relating to the Contract. Communications by and with the Architect's consultants shall be through the Architect. Communications by and with Subcontractors and material suppliers shall be through the Contractor. Communications by and with separate contractors shall be through the Owner.

§ 4.2.5 Based on the Architect's evaluations of the Contractor's Applications for Payment, the Architect will review and certify the amounts due the Contractor and will issue Certificates for Payment in such amounts.

§ 4.2.6 The Architect has authority to reject Work that does not conform to the Contract Documents. Whenever the Architect considers it necessary or advisable, the Architect will have authority to require inspection or testing of the Work in accordance with Sections 13.5.2 and 13.5.3, whether or not such Work is fabricated, installed or completed. However, neither this authority of the Architect nor a decision made in good faith either to exercise or not to exercise such authority shall give rise to a duty or responsibility of the Architect to the Contractor, Subcontractors, material and equipment suppliers, their agents or employees, or other persons or entities performing portions of the Work.

AIA Document A201™ – 2007. Copyright © 1911, 1915, 1918, 1925, 1937, 1951, 1958, 1961, 1963, 1966, 1970, 1976, 1987, 1997 and 2007 by The American Institute of Architects. **All rights reserved.** **WARNING: This AIA® Document is protected by U.S. Copyright Law and International Treaties. Unauthorized reproduction or distribution of this AIA® Document, or any portion of it, may result in severe civil and criminal penalties, and will be prosecuted to the maximum extent possible under the law.** This document was produced by AIA software at 12:30:07 on 10/15/2015 under Order No. 3613561640 which expires on 09/28/2016, and is not for resale.
User Notes:
(3B9ADA0B)

CONFORMED

§ 4.2.7 The Architect will review and approve, or take other appropriate action upon, the Contractor's submittals such as Shop Drawings, Product Data and Samples, but only for the limited purpose of checking for conformance with information given and the design concept expressed in the Contract Documents. The Architect's action will be taken in accordance with the submittal schedule approved by the Architect or, in the absence of an approved submittal schedule, with reasonable promptness while allowing sufficient time in the Architect's professional judgment to permit adequate review. Review of such submittals is not conducted for the purpose of determining the accuracy and completeness of other details such as dimensions and quantities, or for substantiating instructions for installation or performance of equipment or systems, all of which remain the responsibility of the Contractor as required by the Contract Documents. The Architect's review of the Contractor's submittals shall not relieve the Contractor of the obligations under Sections 3.3, 3.5 and 3.12. The Architect's review shall not constitute approval of safety precautions or, unless otherwise specifically stated by the Architect, of any construction means, methods, techniques, sequences or procedures. The Architect's approval of a specific item shall not indicate approval of an assembly of which the item is a component.

§ 4.2.8 The Architect will prepare Change Orders and Construction Change Directives, and may authorize minor changes in the Work as provided in Section 7.4. The Architect will investigate and make determinations and recommendations regarding concealed and unknown conditions as provided in Section 3.7.4.

§ 4.2.9 The Architect will conduct inspections to determine the date or dates of Substantial Completion and the date of final completion; issue Certificates of Substantial Completion pursuant to Section 9.8; receive and forward to the Owner, for the Owner's review and records, written warranties and related documents required by the Contract and assembled by the Contractor pursuant to Section 9.10; and issue a final Certificate for Payment pursuant to Section 9.10.

§ 4.2.10 If the Owner and Architect agree, the Architect will provide one or more project representatives to assist in carrying out the Architect's responsibilities at the site. The duties, responsibilities and limitations of authority of such project representatives shall be as set forth in an exhibit to be incorporated in the Contract Documents.

§ 4.2.11 The Architect will interpret and decide matters concerning performance under, and requirements of, the Contract Documents on written request of either the Owner or Contractor. The Architect's response to such requests will be made in writing within any time limits agreed upon or otherwise with reasonable promptness.

§ 4.2.12 Interpretations and decisions of the Architect will be consistent with the intent of, and reasonably inferable from, the Contract Documents and will be in writing or in the form of drawings. When making such interpretations and decisions, the Architect will endeavor to secure faithful performance by both Owner and Contractor, will not show partiality to either and will not be liable for results of interpretations or decisions rendered in good faith.

§ 4.2.13 The Architect's decisions on matters relating to aesthetic effect will be final if consistent with the intent expressed in the Contract Documents.

§ 4.2.14 The Architect will review and respond to requests for information about the Contract Documents. The Architect's response to such requests will be made in writing within any time limits agreed upon or otherwise with reasonable promptness. If appropriate, the Architect will prepare and issue supplemental Drawings and Specifications in response to the requests for information.

ARTICLE 5 SUBCONTRACTORS

§ 5.1 DEFINITIONS

§ 5.1.1 A Subcontractor is a person or entity who has a direct contract with the Contractor to perform a portion of the Work at the site. The term "Subcontractor" is referred to throughout the Contract Documents as if singular in number and means a Subcontractor or an authorized representative of the Subcontractor. The term "Subcontractor" does not include a separate contractor or subcontractors of a separate contractor.

AIA Document A201™ – 2007. Copyright © 1911, 1915, 1918, 1925, 1937, 1951, 1958, 1961, 1963, 1966, 1970, 1976, 1987, 1997 and 2007 by The American Institute of Architects. **All rights reserved. WARNING: This AIA® Document is protected by U.S. Copyright Law and International Treaties. Unauthorized reproduction or distribution of this AIA® Document, or any portion of it, may result in severe civil and criminal penalties, and will be prosecuted to the maximum extent possible under the law.** This document was produced by AIA software at 12:30:07 on 10/15/2015 under Order No. 3613561640 which expires on 09/28/2016, and is not for resale.
User Notes:

CONFORMED

§ 5.1.2 A Sub-subcontractor is a person or entity who has a direct or indirect contract with a Subcontractor to perform a portion of the Work at the site. The term "Sub-subcontractor" is referred to throughout the Contract Documents as if singular in number and means a Sub-subcontractor or an authorized representative of the Sub-subcontractor.

§ 5.2 AWARD OF SUBCONTRACTS AND OTHER CONTRACTS FOR PORTIONS OF THE WORK

§ 5.2.1 Unless otherwise stated in the Contract Documents or the bidding requirements, the Contractor, as soon as practicable after award of the Contract, shall furnish in writing to the Owner through the Architect the names of persons or entities (including those who are to furnish materials or equipment fabricated to a special design) proposed for each principal portion of the Work. The Architect may reply within 14 days to the Contractor in writing stating (1) whether the Owner or the Architect has reasonable objection to any such proposed person or entity or (2) that the Architect requires additional time for review. Failure of the Owner or Architect to reply within the 14-day period shall constitute notice of no reasonable objection.

§ 5.2.2 The Contractor shall not contract with a proposed person or entity to whom the Owner or Architect has made reasonable and timely objection. The Contractor shall not be required to contract with anyone to whom the Contractor has made reasonable objection.

§ 5.2.3 If the Owner or Architect has reasonable objection to a person or entity proposed by the Contractor, the Contractor shall propose another to whom the Owner or Architect has no reasonable objection. If the proposed but rejected Subcontractor was reasonably capable of performing the Work, the Contract Sum and Contract Time shall be increased or decreased by the difference, if any, occasioned by such change, and an appropriate Change Order shall be issued before commencement of the substitute Subcontractor's Work. However, no increase in the Contract Sum or Contract Time shall be allowed for such change unless the Contractor has acted promptly and responsively in submitting names as required.

§ 5.2.4 The Contractor shall not substitute a Subcontractor, person or entity previously selected if the Owner or Architect makes reasonable objection to such substitution.

§ 5.3 SUBCONTRACTUAL RELATIONS

By appropriate agreement, written where legally required for validity, the Contractor shall require each Subcontractor, to the extent of the Work to be performed by the Subcontractor, to be bound to the Contractor by terms of the Contract Documents, and to assume toward the Contractor all the obligations and responsibilities, including the responsibility for safety of the Subcontractor's Work, which the Contractor, by these Documents, assumes toward the Owner and Architect. Each subcontract agreement shall preserve and protect the rights of the Owner and Architect under the Contract Documents with respect to the Work to be performed by the Subcontractor so that subcontracting thereof will not prejudice such rights, and shall allow to the Subcontractor, unless specifically provided otherwise in the subcontract agreement, the benefit of all rights, remedies and redress against the Contractor that the Contractor, by the Contract Documents, has against the Owner. Where appropriate, the Contractor shall require each Subcontractor to enter into similar agreements with Sub-subcontractors. The Contractor shall make available to each proposed Subcontractor, prior to the execution of the subcontract agreement, copies of the Contract Documents to which the Subcontractor will be bound, and, upon written request of the Subcontractor, identify to the Subcontractor terms and conditions of the proposed subcontract agreement that may be at variance with the Contract Documents. Subcontractors will similarly make copies of applicable portions of such documents available to their respective proposed Sub-subcontractors.

§ 5.4 CONTINGENT ASSIGNMENT OF SUBCONTRACTS

§ 5.4.1 Each subcontract agreement for a portion of the Work is assigned by the Contractor to the Owner, provided that

.1 assignment is effective only after termination of the Contract by the Owner for cause pursuant to Section 14.2 and only for those subcontract agreements that the Owner accepts by notifying the Subcontractor and Contractor in writing; and

.2 assignment is subject to the prior rights of the surety, if any, obligated under bond relating to the Contract.

AIA Document A201™ – 2007. Copyright © 1911, 1915, 1918, 1925, 1937, 1951, 1958, 1961, 1963, 1966, 1970, 1976, 1987, 1997 and 2007 by The American Institute of Architects. **All rights reserved. WARNING: This AIA® Document is protected by U.S. Copyright Law and International Treaties. Unauthorized reproduction or distribution of this AIA® Document, or any portion of it, may result in severe civil and criminal penalties, and will be prosecuted to the maximum extent possible under the law.** This document was produced by AIA software at 12:30:07 on 10/15/2015 under Order No. 3613561640 which expires on 09/28/2016, and is not for resale.
User Notes:
(3B9ADA0B)

When the Owner accepts the assignment of a subcontract agreement, the Owner assumes the Contractor's rights and obligations under the subcontract.

§ 5.4.2 Upon such assignment, if the Work has been suspended for more than 30 days, the Subcontractor's compensation shall be equitably adjusted for increases in cost resulting from the suspension.

§ 5.4.3 Upon such assignment to the Owner under this Section 5.4, the Owner may further assign the subcontract to a successor contractor or other entity. If the Owner assigns the subcontract to a successor contractor or other entity, the Owner shall nevertheless remain legally responsible for all of the successor contractor's obligations under the subcontract.

ARTICLE 6 CONSTRUCTION BY OWNER OR BY SEPARATE CONTRACTORS

§ 6.1 OWNER'S RIGHT TO PERFORM CONSTRUCTION AND TO AWARD SEPARATE CONTRACTS

§ 6.1.1 The Owner reserves the right to perform construction or operations related to the Project with the Owner's own forces, and to award separate contracts in connection with other portions of the Project or other construction or operations on the site under Conditions of the Contract identical or substantially similar to these including those portions related to insurance and waiver of subrogation. If the Contractor claims that delay or additional cost is involved because of such action by the Owner, the Contractor shall make such Claim as provided in Article 15.

§ 6.1.2 When separate contracts are awarded for different portions of the Project or other construction or operations on the site, the term "Contractor" in the Contract Documents in each case shall mean the Contractor who executes each separate Owner-Contractor Agreement.

§ 6.1.3 The Owner shall provide for coordination of the activities of the Owner's own forces and of each separate contractor with the Work of the Contractor, who shall cooperate with them. The Contractor shall participate with other separate contractors and the Owner in reviewing their construction schedules. The Contractor shall make any revisions to the construction schedule deemed necessary after a joint review and mutual agreement. The construction schedules shall then constitute the schedules to be used by the Contractor, separate contractors and the Owner until subsequently revised.

§ 6.1.4 Unless otherwise provided in the Contract Documents, when the Owner performs construction or operations related to the Project with the Owner's own forces, the Owner shall be deemed to be subject to the same obligations and to have the same rights that apply to the Contractor under the Conditions of the Contract, including, without excluding others, those stated in Article 3, this Article 6 and Articles 10, 11 and 12.

§ 6.2 MUTUAL RESPONSIBILITY

§ 6.2.1 The Contractor shall afford the Owner and separate contractors reasonable opportunity for introduction and storage of their materials and equipment and performance of their activities, and shall connect and coordinate the Contractor's construction and operations with theirs as required by the Contract Documents.

§ 6.2.2 If part of the Contractor's Work depends for proper execution or results upon construction or operations by the Owner or a separate contractor, the Contractor shall, prior to proceeding with that portion of the Work, promptly report to the Architect apparent discrepancies or defects in such other construction that would render it unsuitable for such proper execution and results. Failure of the Contractor so to report shall constitute an acknowledgment that the Owner's or separate contractor's completed or partially completed construction is fit and proper to receive the Contractor's Work, except as to defects not then reasonably discoverable.

§ 6.2.3 The Contractor shall reimburse the Owner for costs the Owner incurs that are payable to a separate contractor because of the Contractor's delays, improperly timed activities or defective construction. The Owner shall be responsible to the Contractor for costs the Contractor incurs because of a separate contractor's delays, improperly timed activities, damage to the Work or defective construction.

Init.
/

AIA Document A201™ – 2007. Copyright © 1911, 1915, 1918, 1925, 1937, 1951, 1958, 1961, 1963, 1966, 1970, 1976, 1987, 1997 and 2007 by The American Institute of Architects. **All rights reserved. WARNING: This AIA® Document is protected by U.S. Copyright Law and International Treaties. Unauthorized reproduction or distribution of this AIA® Document, or any portion of it, may result in severe civil and criminal penalties, and will be prosecuted to the maximum extent possible under the law.** This document was produced by AIA software at 12:30:07 on 10/15/2015 under Order No. 3613561640 which expires on 09/28/2016, and is not for resale.
User Notes:
(3B9ADA0B)

CONFORMED

§ 6.2.4 The Contractor shall promptly remedy damage the Contractor wrongfully causes to completed or partially completed construction or to property of the Owner or separate contractors as provided in Section 10.2.5.

§ 6.2.5 The Owner and each separate contractor shall have the same responsibilities for cutting and patching as are described for the Contractor in Section 3.14.

§ 6.3 OWNER'S RIGHT TO CLEAN UP

If a dispute arises among the Contractor, separate contractors and the Owner as to the responsibility under their respective contracts for maintaining the premises and surrounding area free from waste materials and rubbish, the Owner may clean up and the Architect will allocate the cost among those responsible.

ARTICLE 7 CHANGES IN THE WORK

§ 7.1 GENERAL

§ 7.1.1 Changes in the Work may be accomplished after execution of the Contract, and without invalidating the Contract, by Change Order, Construction Change Directive or order for a minor change in the Work, subject to the limitations stated in this Article 7 and elsewhere in the Contract Documents.

§ 7.1.2 A Change Order shall be based upon agreement among the Owner, Contractor and Architect; a Construction Change Directive requires agreement by the Owner and Architect and may or may not be agreed to by the Contractor; an order for a minor change in the Work may be issued by the Architect alone.

§ 7.1.3 Changes in the Work shall be performed under applicable provisions of the Contract Documents, and the Contractor shall proceed promptly, unless otherwise provided in the Change Order, Construction Change Directive or order for a minor change in the Work.

§ 7.2 CHANGE ORDERS

§ 7.2.1 A Change Order is a written instrument prepared by the Architect and signed by the Owner, Contractor and Architect stating their agreement upon all of the following:

- **.1** The change in the Work;
- **.2** The amount of the adjustment, if any, in the Contract Sum; and
- **.3** The extent of the adjustment, if any, in the Contract Time.

§ 7.3 CONSTRUCTION CHANGE DIRECTIVES

§ 7.3.1 A Construction Change Directive is a written order prepared by the Architect and signed by the Owner and Architect, directing a change in the Work prior to agreement on adjustment, if any, in the Contract Sum or Contract Time, or both. The Owner may by Construction Change Directive, without invalidating the Contract, order changes in the Work within the general scope of the Contract consisting of additions, deletions or other revisions, the Contract Sum and Contract Time being adjusted accordingly.

§ 7.3.2 A Construction Change Directive shall be used in the absence of total agreement on the terms of a Change Order.

§ 7.3.3 If the Construction Change Directive provides for an adjustment to the Contract Sum, the adjustment shall be based on one of the following methods:

- **.1** Mutual acceptance of a lump sum properly itemized and supported by sufficient substantiating data to permit evaluation;
- **.2** Unit prices stated in the Contract Documents or subsequently agreed upon;
- **.3** Cost to be determined in a manner agreed upon by the parties and a mutually acceptable fixed or percentage fee; or
- **.4** As provided in Section 7.3.7.

§ 7.3.4 If unit prices are stated in the Contract Documents or subsequently agreed upon, and if quantities originally contemplated are materially changed in a proposed Change Order or Construction Change

AIA Document A201™ – 2007. Copyright © 1911, 1915, 1918, 1925, 1937, 1951, 1958, 1961, 1963, 1966, 1970, 1976, 1987, 1997 and 2007 by The American Institute of Architects. All rights reserved. WARNING: This AIA® Document is protected by U.S. Copyright Law and International Treaties. Unauthorized reproduction or distribution of this AIA® Document, or any portion of it, may result in severe civil and criminal penalties, and will be prosecuted to the maximum extent possible under the law. This document was produced by AIA software at 12:30:07 on 10/15/2015 under Order No. 3613561640 which expires on 09/28/2016, and is not for resale.
User Notes: (3B9ADA0B)

Directive so that application of such unit prices to quantities of Work proposed will cause substantial inequity to the Owner or Contractor, the applicable unit prices shall be equitably adjusted.

§ 7.3.5 Upon receipt of a Construction Change Directive, the Contractor shall promptly proceed with the change in the Work involved and advise the Architect of the Contractor's agreement or disagreement with the method, if any, provided in the Construction Change Directive for determining the proposed adjustment in the Contract Sum or Contract Time.

§ 7.3.6 A Construction Change Directive signed by the Contractor indicates the Contractor's agreement therewith, including adjustment in Contract Sum and Contract Time or the method for determining them. Such agreement shall be effective immediately and shall be recorded as a Change Order.

§ 7.3.7 If the Contractor does not respond promptly or disagrees with the method for adjustment in the Contract Sum, the Architect shall determine the method and the adjustment on the basis of reasonable expenditures and savings of those performing the Work attributable to the change, including, in case of an increase in the Contract Sum, an amount for overhead and profit as set forth in the Agreement, or if no such amount is set forth in the Agreement, a reasonable amount. In such case, and also under Section 7.3.3.3, the Contractor shall keep and present, in such form as the Architect may prescribe, an itemized accounting together with appropriate supporting data. Unless otherwise provided in the Contract Documents, costs for the purposes of this Section 7.3.7 shall be limited to the following:

- **.1** Costs of labor, including social security, old age and unemployment insurance, fringe benefits required by agreement or custom, and workers' compensation insurance;
- **.2** Costs of materials, supplies and equipment, including cost of transportation, whether incorporated or consumed;
- **.3** Rental costs of machinery and equipment, exclusive of hand tools, whether rented from the Contractor or others;
- **.4** Costs of premiums for all bonds and insurance, permit fees, and sales, use or similar taxes related to the Work; and
- **.5** Additional costs of supervision and field office personnel directly attributable to the change.

§ 7.3.8 The amount of credit to be allowed by the Contractor to the Owner for a deletion or change that results in a net decrease in the Contract Sum shall be actual net cost as confirmed by the Architect. When both additions and credits covering related Work or substitutions are involved in a change, the allowance for overhead and profit shall be figured on the basis of net increase, if any, with respect to that change.

§ 7.3.9 Pending final determination of the total cost of a Construction Change Directive to the Owner, the Contractor may request payment for Work completed under the Construction Change Directive in Applications for Payment. The Architect will make an interim determination for purposes of monthly certification for payment for those costs and certify for payment the amount that the Architect determines, in the Architect's professional judgment, to be reasonably justified. The Architect's interim determination of cost shall adjust the Contract Sum on the same basis as a Change Order, subject to the right of either party to disagree and assert a Claim in accordance with Article 15.

§ 7.3.10 When the Owner and Contractor agree with a determination made by the Architect concerning the adjustments in the Contract Sum and Contract Time, or otherwise reach agreement upon the adjustments, such agreement shall be effective immediately and the Architect will prepare a Change Order. Change Orders may be issued for all or any part of a Construction Change Directive.

§ 7.4 MINOR CHANGES IN THE WORK

The Architect has authority to order minor changes in the Work not involving adjustment in the Contract Sum or extension of the Contract Time and not inconsistent with the intent of the Contract Documents. Such changes will be effected by written order signed by the Architect and shall be binding on the Owner and Contractor.

AIA Document A201™ – 2007. Copyright © 1911, 1915, 1918, 1925, 1937, 1951, 1958, 1961, 1963, 1966, 1970, 1976, 1987, 1997 and 2007 by The American Institute of Architects. **All rights reserved.** **WARNING: This AIA® Document is protected by U.S. Copyright Law and International Treaties. Unauthorized reproduction or distribution of this AIA® Document, or any portion of it, may result in severe civil and criminal penalties, and will be prosecuted to the maximum extent possible under the law.** This document was produced by AIA software at 12:30:07 on 10/15/2015 under Order No. 3613561640 which expires on 09/28/2016, and is not for resale.
User Notes: (3B9ADA0B)

CONFORMED

ARTICLE 8 TIME

§ 8.1 DEFINITIONS

§ 8.1.1 Unless otherwise provided, Contract Time is the period of time, including authorized adjustments, allotted in the Contract Documents for Substantial Completion of the Work.

§ 8.1.2 The date of commencement of the Work is the date established in the Agreement.

§ 8.1.3 The date of Substantial Completion is the date certified by the Architect in accordance with Section 9.8.

§ 8.1.4 The term "day" as used in the Contract Documents shall mean calendar day unless otherwise specifically defined.

§ 8.2 PROGRESS AND COMPLETION

§ 8.2.1 Time limits stated in the Contract Documents are of the essence of the Contract. By executing the Agreement the Contractor confirms that the Contract Time is a reasonable period for performing the Work.

§ 8.2.2 The Contractor shall not knowingly, except by agreement or instruction of the Owner in writing, prematurely commence operations on the site or elsewhere prior to the effective date of insurance required by Article 11 to be furnished by the Contractor and Owner. The date of commencement of the Work shall not be changed by the effective date of such insurance.

§ 8.2.3 The Contractor shall proceed expeditiously with adequate forces and shall achieve Substantial Completion within the Contract Time.

§ 8.3 DELAYS AND EXTENSIONS OF TIME

§ 8.3.1 If the Contractor is delayed at any time in the commencement or progress of the Work by an act or neglect of the Owner or Architect, or of an employee of either, or of a separate contractor employed by the Owner; or by changes ordered in the Work; or by labor disputes, fire, unusual delay in deliveries, unavoidable casualties or other causes beyond the Contractor's control; or by delay authorized by the Owner pending mediation and arbitration; or by other causes that the Architect determines may justify delay, then the Contract Time shall be extended by Change Order for such reasonable time as the Architect may determine.

§ 8.3.2 Claims relating to time shall be made in accordance with applicable provisions of Article 15.

§ 8.3.3 This Section 8.3 does not preclude recovery of damages for delay by either party under other provisions of the Contract Documents.

ARTICLE 9 PAYMENTS AND COMPLETION

§ 9.1 CONTRACT SUM

The Contract Sum is stated in the Agreement and, including authorized adjustments, is the total amount payable by the Owner to the Contractor for performance of the Work under the Contract Documents.

§ 9.2 SCHEDULE OF VALUES

Where the Contract is based on a stipulated sum or Guaranteed Maximum Price, the Contractor shall submit to the Architect, before the first Application for Payment, a schedule of values allocating the entire Contract Sum to the various portions of the Work and prepared in such form and supported by such data to substantiate its accuracy as the Architect may require. This schedule, unless objected to by the Architect, shall be used as a basis for reviewing the Contractor's Applications for Payment.

§ 9.3 APPLICATIONS FOR PAYMENT

§ 9.3.1 At least ten days before the date established for each progress payment, the Contractor shall submit to the Architect an itemized Application for Payment prepared in accordance with the schedule of values, if required under Section 9.2, for completed portions of the Work. Such application shall be notarized, if required, and supported by such data substantiating the Contractor's right to payment as the

AIA Document A201™ – 2007. Copyright © 1911, 1915, 1918, 1925, 1937, 1951, 1958, 1961, 1963, 1966, 1970, 1976, 1987, 1997 and 2007 by The American Institute of Architects. **All rights reserved. WARNING: This AIA® Document is protected by U.S. Copyright Law and International Treaties. Unauthorized reproduction or distribution of this AIA® Document, or any portion of it, may result in severe civil and criminal penalties, and will be prosecuted to the maximum extent possible under the law.** This document was produced by AIA software at 12:30:07 on 10/15/2015 under Order No. 3613561640 which expires on 09/28/2016, and is not for resale.
User Notes: (3B9ADA0B)

CONFORMED

Owner or Architect may require, such as copies of requisitions from Subcontractors and material suppliers, and shall reflect retainage if provided for in the Contract Documents.

§ 9.3.1.1 As provided in Section 7.3.9, such applications may include requests for payment on account of changes in the Work that have been properly authorized by Construction Change Directives, or by interim determinations of the Architect, but not yet included in Change Orders.

§ 9.3.1.2 Applications for Payment shall not include requests for payment for portions of the Work for which the Contractor does not intend to pay a Subcontractor or material supplier, unless such Work has been performed by others whom the Contractor intends to pay.

§ 9.3.2 Unless otherwise provided in the Contract Documents, payments shall be made on account of materials and equipment delivered and suitably stored at the site for subsequent incorporation in the Work. If approved in advance by the Owner, payment may similarly be made for materials and equipment suitably stored off the site at a location agreed upon in writing. Payment for materials and equipment stored on or off the site shall be conditioned upon compliance by the Contractor with procedures satisfactory to the Owner to establish the Owner's title to such materials and equipment or otherwise protect the Owner's interest, and shall include the costs of applicable insurance, storage and transportation to the site for such materials and equipment stored off the site.

§ 9.3.3 The Contractor warrants that title to all Work covered by an Application for Payment will pass to the Owner no later than the time of payment. The Contractor further warrants that upon submittal of an Application for Payment all Work for which Certificates for Payment have been previously issued and payments received from the Owner shall, to the best of the Contractor's knowledge, information and belief, be free and clear of liens, claims, security interests or encumbrances in favor of the Contractor, Subcontractors, material suppliers, or other persons or entities making a claim by reason of having provided labor, materials and equipment relating to the Work.

§ 9.4 CERTIFICATES FOR PAYMENT

§ 9.4.1 The Architect will, within seven days after receipt of the Contractor's Application for Payment, either issue to the Owner a Certificate for Payment, with a copy to the Contractor, for such amount as the Architect determines is properly due, or notify the Contractor and Owner in writing of the Architect's reasons for withholding certification in whole or in part as provided in Section 9.5.1.

§ 9.4.2 The issuance of a Certificate for Payment will constitute a representation by the Architect to the Owner, based on the Architect's evaluation of the Work and the data comprising the Application for Payment, that, to the best of the Architect's knowledge, information and belief, the Work has progressed to the point indicated and that the quality of the Work is in accordance with the Contract Documents. The foregoing representations are subject to an evaluation of the Work for conformance with the Contract Documents upon Substantial Completion, to results of subsequent tests and inspections, to correction of minor deviations from the Contract Documents prior to completion and to specific qualifications expressed by the Architect. The issuance of a Certificate for Payment will further constitute a representation that the Contractor is entitled to payment in the amount certified. However, the issuance of a Certificate for Payment will not be a representation that the Architect has (1) made exhaustive or continuous on-site inspections to check the quality or quantity of the Work, (2) reviewed construction means, methods, techniques, sequences or procedures, (3) reviewed copies of requisitions received from Subcontractors and material suppliers and other data requested by the Owner to substantiate the Contractor's right to payment, or (4) made examination to ascertain how or for what purpose the Contractor has used money previously paid on account of the Contract Sum.

§ 9.5 DECISIONS TO WITHHOLD CERTIFICATION

§ 9.5.1 The Architect may withhold a Certificate for Payment in whole or in part, to the extent reasonably necessary to protect the Owner, if in the Architect's opinion the representations to the Owner required by Section 9.4.2 cannot be made. If the Architect is unable to certify payment in the amount of the Application, the Architect will notify the Contractor and Owner as provided in Section 9.4.1. If the Contractor and Architect cannot agree on a revised amount, the Architect will promptly issue a Certificate for Payment for the amount for which the Architect is able to make such representations to the Owner.

AIA Document A201™ – 2007. Copyright © 1911, 1915, 1918, 1925, 1937, 1951, 1958, 1961, 1963, 1966, 1970, 1976, 1987, 1997 and 2007 by The American Institute of Architects. **All rights reserved.** **WARNING: This AIA® Document is protected by U.S. Copyright Law and International Treaties. Unauthorized reproduction or distribution of this AIA® Document, or any portion of it, may result in severe civil and criminal penalties, and will be prosecuted to the maximum extent possible under the law.** This document was produced by AIA software at 12:30:07 on 10/15/2015 under Order No. 3613561640 which expires on 09/28/2016, and is not for resale.
User Notes:
(3B9ADA0B)

CONFORMED

The Architect may also withhold a Certificate for Payment or, because of subsequently discovered evidence, may nullify the whole or a part of a Certificate for Payment previously issued, to such extent as may be necessary in the Architect's opinion to protect the Owner from loss for which the Contractor is responsible, including loss resulting from acts and omissions described in Section 3.3.2, because of

.1 defective Work not remedied;
.2 third party claims filed or reasonable evidence indicating probable filing of such claims unless security acceptable to the Owner is provided by the Contractor;
.3 failure of the Contractor to make payments properly to Subcontractors or for labor, materials or equipment;
.4 reasonable evidence that the Work cannot be completed for the unpaid balance of the Contract Sum;
.5 damage to the Owner or a separate contractor;
.6 reasonable evidence that the Work will not be completed within the Contract Time, and that the unpaid balance would not be adequate to cover actual or liquidated damages for the anticipated delay; or
.7 repeated failure to carry out the Work in accordance with the Contract Documents.

§ 9.5.2 When the above reasons for withholding certification are removed, certification will be made for amounts previously withheld.

§ 9.5.3 If the Architect withholds certification for payment under Section 9.5.1.3, the Owner may, at its sole option, issue joint checks to the Contractor and to any Subcontractor or material or equipment suppliers to whom the Contractor failed to make payment for Work properly performed or material or equipment suitably delivered. If the Owner makes payments by joint check, the Owner shall notify the Architect and the Architect will reflect such payment on the next Certificate for Payment.

§ 9.6 PROGRESS PAYMENTS

§ 9.6.1 After the Architect has issued a Certificate for Payment, the Owner shall make payment in the manner and within the time provided in the Contract Documents, and shall so notify the Architect.

§ 9.6.2 The Contractor shall pay each Subcontractor no later than seven days after receipt of payment from the Owner the amount to which the Subcontractor is entitled, reflecting percentages actually retained from payments to the Contractor on account of the Subcontractor's portion of the Work. The Contractor shall, by appropriate agreement with each Subcontractor, require each Subcontractor to make payments to Sub-subcontractors in a similar manner.

§ 9.6.3 The Architect will, on request, furnish to a Subcontractor, if practicable, information regarding percentages of completion or amounts applied for by the Contractor and action taken thereon by the Architect and Owner on account of portions of the Work done by such Subcontractor.

§ 9.6.4 The Owner has the right to request written evidence from the Contractor that the Contractor has properly paid Subcontractors and material and equipment suppliers amounts paid by the Owner to the Contractor for subcontracted Work. If the Contractor fails to furnish such evidence within seven days, the Owner shall have the right to contact Subcontractors to ascertain whether they have been properly paid. Neither the Owner nor Architect shall have an obligation to pay or to see to the payment of money to a Subcontractor, except as may otherwise be required by law.

§ 9.6.5 Contractor payments to material and equipment suppliers shall be treated in a manner similar to that provided in Sections 9.6.2, 9.6.3 and 9.6.4.

§ 9.6.6 A Certificate for Payment, a progress payment, or partial or entire use or occupancy of the Project by the Owner shall not constitute acceptance of Work not in accordance with the Contract Documents.

§ 9.6.7 Unless the Contractor provides the Owner with a payment bond in the full penal sum of the Contract Sum, payments received by the Contractor for Work properly performed by Subcontractors and suppliers shall be held by the Contractor for those Subcontractors or suppliers who performed Work or furnished materials, or both, under contract with the Contractor for which payment was made by the

AIA Document A201™ – 2007. Copyright © 1911, 1915, 1918, 1925, 1937, 1951, 1958, 1961, 1963, 1966, 1970, 1976, 1987, 1997 and 2007 by The American Institute of Architects. **All rights reserved. WARNING: This AIA® Document is protected by U.S. Copyright Law and International Treaties. Unauthorized reproduction or distribution of this AIA® Document, or any portion of it, may result in severe civil and criminal penalties, and will be prosecuted to the maximum extent possible under the law.** This document was produced by AIA software at 12:30:07 on 10/15/2015 under Order No. 3613561640 which expires on 09/28/2016, and is not for resale.
User Notes:
(3B9ADA0B)

CONFORMED

Owner. Nothing contained herein shall require money to be placed in a separate account and not commingled with money of the Contractor, shall create any fiduciary liability or tort liability on the part of the Contractor for breach of trust or shall entitle any person or entity to an award of punitive damages against the Contractor for breach of the requirements of this provision.

§ 9.7 FAILURE OF PAYMENT

If the Architect does not issue a Certificate for Payment, through no fault of the Contractor, within seven days after receipt of the Contractor's Application for Payment, or if the Owner does not pay the Contractor within seven days after the date established in the Contract Documents the amount certified by the Architect or awarded by binding dispute resolution, then the Contractor may, upon seven additional days' written notice to the Owner and Architect, stop the Work until payment of the amount owing has been received. The Contract Time shall be extended appropriately and the Contract Sum shall be increased by the amount of the Contractor's reasonable costs of shut-down, delay and start-up, plus interest as provided for in the Contract Documents.

§ 9.8 SUBSTANTIAL COMPLETION

§ 9.8.1 Substantial Completion is the stage in the progress of the Work when the Work or designated portion thereof is sufficiently complete in accordance with the Contract Documents so that the Owner can occupy or utilize the Work for its intended use.

§ 9.8.2 When the Contractor considers that the Work, or a portion thereof which the Owner agrees to accept separately, is substantially complete, the Contractor shall prepare and submit to the Architect a comprehensive list of items to be completed or corrected prior to final payment. Failure to include an item on such list does not alter the responsibility of the Contractor to complete all Work in accordance with the Contract Documents.

§ 9.8.3 Upon receipt of the Contractor's list, the Architect will make an inspection to determine whether the Work or designated portion thereof is substantially complete. If the Architect's inspection discloses any item, whether or not included on the Contractor's list, which is not sufficiently complete in accordance with the Contract Documents so that the Owner can occupy or utilize the Work or designated portion thereof for its intended use, the Contractor shall, before issuance of the Certificate of Substantial Completion, complete or correct such item upon notification by the Architect. In such case, the Contractor shall then submit a request for another inspection by the Architect to determine Substantial Completion.

§ 9.8.4 When the Work or designated portion thereof is substantially complete, the Architect will prepare a Certificate of Substantial Completion that shall establish the date of Substantial Completion, shall establish responsibilities of the Owner and Contractor for security, maintenance, heat, utilities, damage to the Work and insurance, and shall fix the time within which the Contractor shall finish all items on the list accompanying the Certificate. Warranties required by the Contract Documents shall commence on the date of Substantial Completion of the Work or designated portion thereof unless otherwise provided in the Certificate of Substantial Completion.

§ 9.8.5 The Certificate of Substantial Completion shall be submitted to the Owner and Contractor for their written acceptance of responsibilities assigned to them in such Certificate. Upon such acceptance and consent of surety, if any, the Owner shall make payment of retainage applying to such Work or designated portion thereof. Such payment shall be adjusted for Work that is incomplete or not in accordance with the requirements of the Contract Documents.

§ 9.9 PARTIAL OCCUPANCY OR USE

§ 9.9.1 The Owner may occupy or use any completed or partially completed portion of the Work at any stage when such portion is designated by separate agreement with the Contractor, provided such occupancy or use is consented to by the insurer as required under Section 11.3.1.5 and authorized by public authorities having jurisdiction over the Project. Such partial occupancy or use may commence whether or not the portion is substantially complete, provided the Owner and Contractor have accepted in writing the responsibilities assigned to each of them for payments, retainage, if any, security, maintenance, heat, utilities, damage to the Work and insurance, and have agreed in writing concerning the period for correction of the Work and commencement of warranties required by the Contract

AIA Document A201™ – 2007. Copyright © 1911, 1915, 1918, 1925, 1937, 1951, 1958, 1961, 1963, 1966, 1970, 1976, 1987, 1997 and 2007 by The American Institute of Architects. **All rights reserved. WARNING: This AIA® Document is protected by U.S. Copyright Law and International Treaties. Unauthorized reproduction or distribution of this AIA® Document, or any portion of it, may result in severe civil and criminal penalties, and will be prosecuted to the maximum extent possible under the law.** This document was produced by AIA software at 12:30:07 on 10/15/2015 under Order No. 3613561640 which expires on 09/28/2016, and is not for resale.
User Notes:
(3B9ADA0B)

Documents. When the Contractor considers a portion substantially complete, the Contractor shall prepare and submit a list to the Architect as provided under Section 9.8.2. Consent of the Contractor to partial occupancy or use shall not be unreasonably withheld. The stage of the progress of the Work shall be determined by written agreement between the Owner and Contractor or, if no agreement is reached, by decision of the Architect.

§ 9.9.2 Immediately prior to such partial occupancy or use, the Owner, Contractor and Architect shall jointly inspect the area to be occupied or portion of the Work to be used in order to determine and record the condition of the Work.

§ 9.9.3 Unless otherwise agreed upon, partial occupancy or use of a portion or portions of the Work shall not constitute acceptance of Work not complying with the requirements of the Contract Documents.

§ 9.10 FINAL COMPLETION AND FINAL PAYMENT

§ 9.10.1 Upon receipt of the Contractor's written notice that the Work is ready for final inspection and acceptance and upon receipt of a final Application for Payment, the Architect will promptly make such inspection and, when the Architect finds the Work acceptable under the Contract Documents and the Contract fully performed, the Architect will promptly issue a final Certificate for Payment stating that to the best of the Architect's knowledge, information and belief, and on the basis of the Architect's on-site visits and inspections, the Work has been completed in accordance with terms and conditions of the Contract Documents and that the entire balance found to be due the Contractor and noted in the final Certificate is due and payable. The Architect's final Certificate for Payment will constitute a further representation that conditions listed in Section 9.10.2 as precedent to the Contractor's being entitled to final payment have been fulfilled.

§ 9.10.2 Neither final payment nor any remaining retained percentage shall become due until the Contractor submits to the Architect (1) an affidavit that payrolls, bills for materials and equipment, and other indebtedness connected with the Work for which the Owner or the Owner's property might be responsible or encumbered (less amounts withheld by Owner) have been paid or otherwise satisfied, (2) a certificate evidencing that insurance required by the Contract Documents to remain in force after final payment is currently in effect and will not be canceled or allowed to expire until at least 30 days' prior written notice has been given to the Owner, (3) a written statement that the Contractor knows of no substantial reason that the insurance will not be renewable to cover the period required by the Contract Documents, (4) consent of surety, if any, to final payment and (5), if required by the Owner, other data establishing payment or satisfaction of obligations, such as receipts, releases and waivers of liens, claims, security interests or encumbrances arising out of the Contract, to the extent and in such form as may be designated by the Owner. If a Subcontractor refuses to furnish a release or waiver required by the Owner, the Contractor may furnish a bond satisfactory to the Owner to indemnify the Owner against such lien. If such lien remains unsatisfied after payments are made, the Contractor shall refund to the Owner all money that the Owner may be compelled to pay in discharging such lien, including all costs and reasonable attorneys' fees.

§ 9.10.3 If, after Substantial Completion of the Work, final completion thereof is materially delayed through no fault of the Contractor or by issuance of Change Orders affecting final completion, and the Architect so confirms, the Owner shall, upon application by the Contractor and certification by the Architect, and without terminating the Contract, make payment of the balance due for that portion of the Work fully completed and accepted. If the remaining balance for Work not fully completed or corrected is less than retainage stipulated in the Contract Documents, and if bonds have been furnished, the written consent of surety to payment of the balance due for that portion of the Work fully completed and accepted shall be submitted by the Contractor to the Architect prior to certification of such payment. Such payment shall be made under terms and conditions governing final payment, except that it shall not constitute a waiver of claims.

§ 9.10.4 The making of final payment shall constitute a waiver of Claims by the Owner except those arising from

- **.1** liens, Claims, security interests or encumbrances arising out of the Contract and unsettled;
- **.2** failure of the Work to comply with the requirements of the Contract Documents; or

AIA Document A201™ – 2007. Copyright © 1911, 1915, 1918, 1925, 1937, 1951, 1958, 1961, 1963, 1966, 1970, 1976, 1987, 1997 and 2007 by The American Institute of Architects. **All rights reserved.** **WARNING: This AIA® Document is protected by U.S. Copyright Law and International Treaties. Unauthorized reproduction or distribution of this AIA® Document, or any portion of it, may result in severe civil and criminal penalties, and will be prosecuted to the maximum extent possible under the law.** This document was produced by AIA software at 12:30:07 on 10/15/2015 under Order No. 3613561640 which expires on 09/28/2016, and is not for resale.
User Notes:
(3B9ADA0B)

CONFORMED

.3 terms of special warranties required by the Contract Documents.

§ 9.10.5 Acceptance of final payment by the Contractor, a Subcontractor or material supplier shall constitute a waiver of claims by that payee except those previously made in writing and identified by that payee as unsettled at the time of final Application for Payment.

ARTICLE 10 PROTECTION OF PERSONS AND PROPERTY

§ 10.1 SAFETY PRECAUTIONS AND PROGRAMS

The Contractor shall be responsible for initiating, maintaining and supervising all safety precautions and programs in connection with the performance of the Contract.

§ 10.2 SAFETY OF PERSONS AND PROPERTY

§ 10.2.1 The Contractor shall take reasonable precautions for safety of, and shall provide reasonable protection to prevent damage, injury or loss to

.1 employees on the Work and other persons who may be affected thereby;

.2 the Work and materials and equipment to be incorporated therein, whether in storage on or off the site, under care, custody or control of the Contractor or the Contractor's Subcontractors or Sub-subcontractors; and

.3 other property at the site or adjacent thereto, such as trees, shrubs, lawns, walks, pavements, roadways, structures and utilities not designated for removal, relocation or replacement in the course of construction.

§ 10.2.2 The Contractor shall comply with and give notices required by applicable laws, statutes, ordinances, codes, rules and regulations, and lawful orders of public authorities bearing on safety of persons or property or their protection from damage, injury or loss.

§ 10.2.3 The Contractor shall erect and maintain, as required by existing conditions and performance of the Contract, reasonable safeguards for safety and protection, including posting danger signs and other warnings against hazards, promulgating safety regulations and notifying owners and users of adjacent sites and utilities.

§ 10.2.4 When use or storage of explosives or other hazardous materials or equipment or unusual methods are necessary for execution of the Work, the Contractor shall exercise utmost care and carry on such activities under supervision of properly qualified personnel.

§ 10.2.5 The Contractor shall promptly remedy damage and loss (other than damage or loss insured under property insurance required by the Contract Documents) to property referred to in Sections 10.2.1.2 and 10.2.1.3 caused in whole or in part by the Contractor, a Subcontractor, a Sub-subcontractor, or anyone directly or indirectly employed by any of them, or by anyone for whose acts they may be liable and for which the Contractor is responsible under Sections 10.2.1.2 and 10.2.1.3, except damage or loss attributable to acts or omissions of the Owner or Architect or anyone directly or indirectly employed by either of them, or by anyone for whose acts either of them may be liable, and not attributable to the fault or negligence of the Contractor. The foregoing obligations of the Contractor are in addition to the Contractor's obligations under Section 3.18.

§ 10.2.6 The Contractor shall designate a responsible member of the Contractor's organization at the site whose duty shall be the prevention of accidents. This person shall be the Contractor's superintendent unless otherwise designated by the Contractor in writing to the Owner and Architect.

§ 10.2.7 The Contractor shall not permit any part of the construction or site to be loaded so as to cause damage or create an unsafe condition.

§ 10.2.8 INJURY OR DAMAGE TO PERSON OR PROPERTY

If either party suffers injury or damage to person or property because of an act or omission of the other party, or of others for whose acts such party is legally responsible, written notice of such injury or damage, whether or not insured, shall be given to the other party within a reasonable time not exceeding

AIA Document A201™ – 2007. Copyright © 1911, 1915, 1918, 1925, 1937, 1951, 1958, 1961, 1963, 1966, 1970, 1976, 1987, 1997 and 2007 by The American Institute of Architects. All rights reserved. WARNING: This AIA® Document is protected by U.S. Copyright Law and International Treaties. Unauthorized reproduction or distribution of this AIA® Document, or any portion of it, may result in severe civil and criminal penalties, and will be prosecuted to the maximum extent possible under the law. This document was produced by AIA software at 12:30:07 on 10/15/2015 under Order No. 3613561640 which expires on 09/28/2016, and is not for resale.
User Notes: (3B9ADA0B)

CONFORMED

21 days after discovery. The notice shall provide sufficient detail to enable the other party to investigate the matter.

§ 10.3 HAZARDOUS MATERIALS

§ 10.3.1 The Contractor is responsible for compliance with any requirements included in the Contract Documents regarding hazardous materials. If the Contractor encounters a hazardous material or substance not addressed in the Contract Documents and if reasonable precautions will be inadequate to prevent foreseeable bodily injury or death to persons resulting from a material or substance, including but not limited to asbestos or polychlorinated biphenyl (PCB), encountered on the site by the Contractor, the Contractor shall, upon recognizing the condition, immediately stop Work in the affected area and report the condition to the Owner and Architect in writing.

§ 10.3.2 Upon receipt of the Contractor's written notice, the Owner shall obtain the services of a licensed laboratory to verify the presence or absence of the material or substance reported by the Contractor and, in the event such material or substance is found to be present, to cause it to be rendered harmless. Unless otherwise required by the Contract Documents, the Owner shall furnish in writing to the Contractor and Architect the names and qualifications of persons or entities who are to perform tests verifying the presence or absence of such material or substance or who are to perform the task of removal or safe containment of such material or substance. The Contractor and the Architect will promptly reply to the Owner in writing stating whether or not either has reasonable objection to the persons or entities proposed by the Owner. If either the Contractor or Architect has an objection to a person or entity proposed by the Owner, the Owner shall propose another to whom the Contractor and the Architect have no reasonable objection. When the material or substance has been rendered harmless, Work in the affected area shall resume upon written agreement of the Owner and Contractor. By Change Order, the Contract Time shall be extended appropriately and the Contract Sum shall be increased in the amount of the Contractor's reasonable additional costs of shut-down, delay and start-up.

§ 10.3.3 To the fullest extent permitted by law, the Owner shall indemnify and hold harmless the Contractor, Subcontractors, Architect, Architect's consultants and agents and employees of any of them from and against claims, damages, losses and expenses, including but not limited to attorneys' fees, arising out of or resulting from performance of the Work in the affected area if in fact the material or substance presents the risk of bodily injury or death as described in Section 10.3.1 and has not been rendered harmless, provided that such claim, damage, loss or expense is attributable to bodily injury, sickness, disease or death, or to injury to or destruction of tangible property (other than the Work itself), except to the extent that such damage, loss or expense is due to the fault or negligence of the party seeking indemnity.

§ 10.3.4 The Owner shall not be responsible under this Section 10.3 for materials or substances the Contractor brings to the site unless such materials or substances are required by the Contract Documents. The Owner shall be responsible for materials or substances required by the Contract Documents, except to the extent of the Contractor's fault or negligence in the use and handling of such materials or substances.

§ 10.3.5 The Contractor shall indemnify the Owner for the cost and expense the Owner incurs (1) for remediation of a material or substance the Contractor brings to the site and negligently handles, or (2) where the Contractor fails to perform its obligations under Section 10.3.1, except to the extent that the cost and expense are due to the Owner's fault or negligence.

§ 10.3.6 If, without negligence on the part of the Contractor, the Contractor is held liable by a government agency for the cost of remediation of a hazardous material or substance solely by reason of performing Work as required by the Contract Documents, the Owner shall indemnify the Contractor for all cost and expense thereby incurred.

§ 10.4 EMERGENCIES

In an emergency affecting safety of persons or property, the Contractor shall act, at the Contractor's discretion, to prevent threatened damage, injury or loss. Additional compensation or extension of time

AIA Document A201™ – 2007. Copyright © 1911, 1915, 1918, 1925, 1937, 1951, 1958, 1961, 1963, 1966, 1970, 1976, 1987, 1997 and 2007 by The American Institute of Architects. **All rights reserved. WARNING: This AIA® Document is protected by U.S. Copyright Law and International Treaties. Unauthorized reproduction or distribution of this AIA® Document, or any portion of it, may result in severe civil and criminal penalties, and will be prosecuted to the maximum extent possible under the law.** This document was produced by AIA software at 12:30:07 on 10/15/2015 under Order No. 3613561640 which expires on 09/28/2016, and is not for resale.
User Notes: (3B9ADA0B)

claimed by the Contractor on account of an emergency shall be determined as provided in Article 15 and Article 7.

ARTICLE 11 INSURANCE AND BONDS

§ 11.1 CONTRACTOR'S LIABILITY INSURANCE

§ 11.1.1 The Contractor shall purchase from and maintain in a company or companies lawfully authorized to do business in the jurisdiction in which the Project is located such insurance as will protect the Contractor from claims set forth below which may arise out of or result from the Contractor's operations and completed operations under the Contract and for which the Contractor may be legally liable, whether such operations be by the Contractor or by a Subcontractor or by anyone directly or indirectly employed by any of them, or by anyone for whose acts any of them may be liable:

- **.1** Claims under workers' compensation, disability benefit and other similar employee benefit acts that are applicable to the Work to be performed;
- **.2** Claims for damages because of bodily injury, occupational sickness or disease, or death of the Contractor's employees;
- **.3** Claims for damages because of bodily injury, sickness or disease, or death of any person other than the Contractor's employees;
- **.4** Claims for damages insured by usual personal injury liability coverage;
- **.5** Claims for damages, other than to the Work itself, because of injury to or destruction of tangible property, including loss of use resulting therefrom;
- **.6** Claims for damages because of bodily injury, death of a person or property damage arising out of ownership, maintenance or use of a motor vehicle;
- **.7** Claims for bodily injury or property damage arising out of completed operations; and
- **.8** Claims involving contractual liability insurance applicable to the Contractor's obligations under Section 3.18.

§ 11.1.2 The insurance required by Section 11.1.1 shall be written for not less than limits of liability specified in the Contract Documents or required by law, whichever coverage is greater. Coverages, whether written on an occurrence or claims-made basis, shall be maintained without interruption from the date of commencement of the Work until the date of final payment and termination of any coverage required to be maintained after final payment, and, with respect to the Contractor's completed operations coverage, until the expiration of the period for correction of Work or for such other period for maintenance of completed operations coverage as specified in the Contract Documents.

§ 11.1.3 Certificates of insurance acceptable to the Owner shall be filed with the Owner prior to commencement of the Work and thereafter upon renewal or replacement of each required policy of insurance. These certificates and the insurance policies required by this Section 11.1 shall contain a provision that coverages afforded under the policies will not be canceled or allowed to expire until at least 30 days' prior written notice has been given to the Owner. An additional certificate evidencing continuation of liability coverage, including coverage for completed operations, shall be submitted with the final Application for Payment as required by Section 9.10.2 and thereafter upon renewal or replacement of such coverage until the expiration of the time required by Section 11.1.2. Information concerning reduction of coverage on account of revised limits or claims paid under the General Aggregate, or both, shall be furnished by the Contractor with reasonable promptness.

§ 11.1.4 The Contractor shall cause the commercial liability coverage required by the Contract Documents to include (1) the Owner, the Architect and the Architect's consultants as additional insureds for claims caused in whole or in part by the Contractor's negligent acts or omissions during the Contractor's operations; and (2) the Owner as an additional insured for claims caused in whole or in part by the Contractor's negligent acts or omissions during the Contractor's completed operations.

§ 11.2 OWNER'S LIABILITY INSURANCE

The Owner shall be responsible for purchasing and maintaining the Owner's usual liability insurance.

§ 11.3 PROPERTY INSURANCE

§ 11.3.1 Unless otherwise provided, the Owner shall purchase and maintain, in a company or companies lawfully authorized to do business in the jurisdiction in which the Project is located, property insurance

AIA Document A201™ – 2007. Copyright © 1911, 1915, 1918, 1925, 1937, 1951, 1958, 1961, 1963, 1966, 1970, 1976, 1987, 1997 and 2007 by The American Institute of Architects. **All rights reserved.** **WARNING: This AIA® Document is protected by U.S. Copyright Law and International Treaties. Unauthorized reproduction or distribution of this AIA® Document, or any portion of it, may result in severe civil and criminal penalties, and will be prosecuted to the maximum extent possible under the law.** This document was produced by AIA software at 12:30:07 on 10/15/2015 under Order No. 3613561640 which expires on 09/28/2016, and is not for resale.
User Notes: (3B9ADA0B)

CONFORMED

written on a builder's risk "all-risk" or equivalent policy form in the amount of the initial Contract Sum, plus value of subsequent Contract Modifications and cost of materials supplied or installed by others, comprising total value for the entire Project at the site on a replacement cost basis without optional deductibles. Such property insurance shall be maintained, unless otherwise provided in the Contract Documents or otherwise agreed in writing by all persons and entities who are beneficiaries of such insurance, until final payment has been made as provided in Section 9.10 or until no person or entity other than the Owner has an insurable interest in the property required by this Section 11.3 to be covered, whichever is later. This insurance shall include interests of the Owner, the Contractor, Subcontractors and Sub-subcontractors in the Project.

§ 11.3.1.1 Property insurance shall be on an "all-risk" or equivalent policy form and shall include, without limitation, insurance against the perils of fire (with extended coverage) and physical loss or damage including, without duplication of coverage, theft, vandalism, malicious mischief, collapse, earthquake, flood, windstorm, falsework, testing and startup, temporary buildings and debris removal including demolition occasioned by enforcement of any applicable legal requirements, and shall cover reasonable compensation for Architect's and Contractor's services and expenses required as a result of such insured loss.

§ 11.3.1.2 If the Owner does not intend to purchase such property insurance required by the Contract and with all of the coverages in the amount described above, the Owner shall so inform the Contractor in writing prior to commencement of the Work. The Contractor may then effect insurance that will protect the interests of the Contractor, Subcontractors and Sub-subcontractors in the Work, and by appropriate Change Order the cost thereof shall be charged to the Owner. If the Contractor is damaged by the failure or neglect of the Owner to purchase or maintain insurance as described above, without so notifying the Contractor in writing, then the Owner shall bear all reasonable costs properly attributable thereto.

§ 11.3.1.3 If the property insurance requires deductibles, the Owner shall pay costs not covered because of such deductibles.

§ 11.3.1.4 This property insurance shall cover portions of the Work stored off the site, and also portions of the Work in transit.

§ 11.3.1.5 Partial occupancy or use in accordance with Section 9.9 shall not commence until the insurance company or companies providing property insurance have consented to such partial occupancy or use by endorsement or otherwise. The Owner and the Contractor shall take reasonable steps to obtain consent of the insurance company or companies and shall, without mutual written consent, take no action with respect to partial occupancy or use that would cause cancellation, lapse or reduction of insurance.

§ 11.3.2 BOILER AND MACHINERY INSURANCE

The Owner shall purchase and maintain boiler and machinery insurance required by the Contract Documents or by law, which shall specifically cover such insured objects during installation and until final acceptance by the Owner; this insurance shall include interests of the Owner, Contractor, Subcontractors and Sub-subcontractors in the Work, and the Owner and Contractor shall be named insureds.

§ 11.3.3 LOSS OF USE INSURANCE

The Owner, at the Owner's option, may purchase and maintain such insurance as will insure the Owner against loss of use of the Owner's property due to fire or other hazards, however caused. The Owner waives all rights of action against the Contractor for loss of use of the Owner's property, including consequential losses due to fire or other hazards however caused.

§ 11.3.4 If the Contractor requests in writing that insurance for risks other than those described herein or other special causes of loss be included in the property insurance policy, the Owner shall, if possible, include such insurance, and the cost thereof shall be charged to the Contractor by appropriate Change Order.

§ 11.3.5 If during the Project construction period the Owner insures properties, real or personal or both, at or adjacent to the site by property insurance under policies separate from those insuring the Project, or if

AIA Document A201™ – 2007. Copyright © 1911, 1915, 1918, 1925, 1937, 1951, 1958, 1961, 1963, 1966, 1970, 1976, 1987, 1997 and 2007 by The American Institute of Architects. **All rights reserved.** **WARNING: This AIA® Document is protected by U.S. Copyright Law and International Treaties. Unauthorized reproduction or distribution of this AIA® Document, or any portion of it, may result in severe civil and criminal penalties, and will be prosecuted to the maximum extent possible under the law.** This document was produced by AIA software at 12:30:07 on 10/15/2015 under Order No. 3613561640 which expires on 09/28/2016, and is not for resale.
User Notes:
(3B9ADA0B)

after final payment property insurance is to be provided on the completed Project through a policy or policies other than those insuring the Project during the construction period, the Owner shall waive all rights in accordance with the terms of Section 11.3.7 for damages caused by fire or other causes of loss covered by this separate property insurance. All separate policies shall provide this waiver of subrogation by endorsement or otherwise.

§ 11.3.6 Before an exposure to loss may occur, the Owner shall file with the Contractor a copy of each policy that includes insurance coverages required by this Section 11.3. Each policy shall contain all generally applicable conditions, definitions, exclusions and endorsements related to this Project. Each policy shall contain a provision that the policy will not be canceled or allowed to expire, and that its limits will not be reduced, until at least 30 days' prior written notice has been given to the Contractor.

§ 11.3.7 WAIVERS OF SUBROGATION

The Owner and Contractor waive all rights against (1) each other and any of their subcontractors, sub-subcontractors, agents and employees, each of the other, and (2) the Architect, Architect's consultants, separate contractors described in Article 6, if any, and any of their subcontractors, sub-subcontractors, agents and employees, for damages caused by fire or other causes of loss to the extent covered by property insurance obtained pursuant to this Section 11.3 or other property insurance applicable to the Work, except such rights as they have to proceeds of such insurance held by the Owner as fiduciary. The Owner or Contractor, as appropriate, shall require of the Architect, Architect's consultants, separate contractors described in Article 6, if any, and the subcontractors, sub-subcontractors, agents and employees of any of them, by appropriate agreements, written where legally required for validity, similar waivers each in favor of other parties enumerated herein. The policies shall provide such waivers of subrogation by endorsement or otherwise. A waiver of subrogation shall be effective as to a person or entity even though that person or entity would otherwise have a duty of indemnification, contractual or otherwise, did not pay the insurance premium directly or indirectly, and whether or not the person or entity had an insurable interest in the property damaged.

§ 11.3.8 A loss insured under the Owner's property insurance shall be adjusted by the Owner as fiduciary and made payable to the Owner as fiduciary for the insureds, as their interests may appear, subject to requirements of any applicable mortgagee clause and of Section 11.3.10. The Contractor shall pay Subcontractors their just shares of insurance proceeds received by the Contractor, and by appropriate agreements, written where legally required for validity, shall require Subcontractors to make payments to their Sub-subcontractors in similar manner.

§ 11.3.9 If required in writing by a party in interest, the Owner as fiduciary shall, upon occurrence of an insured loss, give bond for proper performance of the Owner's duties. The cost of required bonds shall be charged against proceeds received as fiduciary. The Owner shall deposit in a separate account proceeds so received, which the Owner shall distribute in accordance with such agreement as the parties in interest may reach, or as determined in accordance with the method of binding dispute resolution selected in the Agreement between the Owner and Contractor. If after such loss no other special agreement is made and unless the Owner terminates the Contract for convenience, replacement of damaged property shall be performed by the Contractor after notification of a Change in the Work in accordance with Article 7.

§ 11.3.10 The Owner as fiduciary shall have power to adjust and settle a loss with insurers unless one of the parties in interest shall object in writing within five days after occurrence of loss to the Owner's exercise of this power; if such objection is made, the dispute shall be resolved in the manner selected by the Owner and Contractor as the method of binding dispute resolution in the Agreement. If the Owner and Contractor have selected arbitration as the method of binding dispute resolution, the Owner as fiduciary shall make settlement with insurers or, in the case of a dispute over distribution of insurance proceeds, in accordance with the directions of the arbitrators.

§ 11.4 PERFORMANCE BOND AND PAYMENT BOND

§ 11.4.1 The Owner shall have the right to require the Contractor to furnish bonds covering faithful performance of the Contract and payment of obligations arising thereunder as stipulated in bidding requirements or specifically required in the Contract Documents on the date of execution of the Contract.

AIA Document A201™ – 2007. Copyright © 1911, 1915, 1918, 1925, 1937, 1951, 1958, 1961, 1963, 1966, 1970, 1976, 1987, 1997 and 2007 by The American Institute of Architects. **All rights reserved.** **WARNING: This AIA® Document is protected by U.S. Copyright Law and International Treaties. Unauthorized reproduction or distribution of this AIA® Document, or any portion of it, may result in severe civil and criminal penalties, and will be prosecuted to the maximum extent possible under the law.** This document was produced by AIA software at 12:30:07 on 10/15/2015 under Order No. 3613561640 which expires on 09/28/2016, and is not for resale.
User Notes:
(3B9ADA0B)

CONFORMED

§ 11.4.2 Upon the request of any person or entity appearing to be a potential beneficiary of bonds covering payment of obligations arising under the Contract, the Contractor shall promptly furnish a copy of the bonds or shall authorize a copy to be furnished.

ARTICLE 12 UNCOVERING AND CORRECTION OF WORK

§ 12.1 UNCOVERING OF WORK

§ 12.1.1 If a portion of the Work is covered contrary to the Architect's request or to requirements specifically expressed in the Contract Documents, it must, if requested in writing by the Architect, be uncovered for the Architect's examination and be replaced at the Contractor's expense without change in the Contract Time.

§ 12.1.2 If a portion of the Work has been covered that the Architect has not specifically requested to examine prior to its being covered, the Architect may request to see such Work and it shall be uncovered by the Contractor. If such Work is in accordance with the Contract Documents, costs of uncovering and replacement shall, by appropriate Change Order, be at the Owner's expense. If such Work is not in accordance with the Contract Documents, such costs and the cost of correction shall be at the Contractor's expense unless the condition was caused by the Owner or a separate contractor in which event the Owner shall be responsible for payment of such costs.

§ 12.2 CORRECTION OF WORK

§ 12.2.1 BEFORE OR AFTER SUBSTANTIAL COMPLETION

The Contractor shall promptly correct Work rejected by the Architect or failing to conform to the requirements of the Contract Documents, whether discovered before or after Substantial Completion and whether or not fabricated, installed or completed. Costs of correcting such rejected Work, including additional testing and inspections, the cost of uncovering and replacement, and compensation for the Architect's services and expenses made necessary thereby, shall be at the Contractor's expense.

§ 12.2.2 AFTER SUBSTANTIAL COMPLETION

§ 12.2.2.1 In addition to the Contractor's obligations under Section 3.5, if, within one year after the date of Substantial Completion of the Work or designated portion thereof or after the date for commencement of warranties established under Section 9.9.1, or by terms of an applicable special warranty required by the Contract Documents, any of the Work is found to be not in accordance with the requirements of the Contract Documents, the Contractor shall correct it promptly after receipt of written notice from the Owner to do so unless the Owner has previously given the Contractor a written acceptance of such condition. The Owner shall give such notice promptly after discovery of the condition. During the one-year period for correction of Work, if the Owner fails to notify the Contractor and give the Contractor an opportunity to make the correction, the Owner waives the rights to require correction by the Contractor and to make a claim for breach of warranty. If the Contractor fails to correct nonconforming Work within a reasonable time during that period after receipt of notice from the Owner or Architect, the Owner may correct it in accordance with Section 2.4.

§ 12.2.2.2 The one-year period for correction of Work shall be extended with respect to portions of Work first performed after Substantial Completion by the period of time between Substantial Completion and the actual completion of that portion of the Work.

§ 12.2.2.3 The one-year period for correction of Work shall not be extended by corrective Work performed by the Contractor pursuant to this Section 12.2.

§ 12.2.3 The Contractor shall remove from the site portions of the Work that are not in accordance with the requirements of the Contract Documents and are neither corrected by the Contractor nor accepted by the Owner.

§ 12.2.4 The Contractor shall bear the cost of correcting destroyed or damaged construction, whether completed or partially completed, of the Owner or separate contractors caused by the Contractor's correction or removal of Work that is not in accordance with the requirements of the Contract Documents.

AIA Document A201™ – 2007. Copyright © 1911, 1915, 1918, 1925, 1937, 1951, 1958, 1961, 1963, 1966, 1970, 1976, 1987, 1997 and 2007 by The American Institute of Architects. **All rights reserved. WARNING: This AIA® Document is protected by U.S. Copyright Law and International Treaties. Unauthorized reproduction or distribution of this AIA® Document, or any portion of it, may result in severe civil and criminal penalties, and will be prosecuted to the maximum extent possible under the law.** This document was produced by AIA software at 12:30:07 on 10/15/2015 under Order No. 3613561640 which expires on 09/28/2016, and is not for resale.
User Notes:
(3B9ADA0B)

§ 12.2.5 Nothing contained in this Section 12.2 shall be construed to establish a period of limitation with respect to other obligations the Contractor has under the Contract Documents. Establishment of the one-year period for correction of Work as described in Section 12.2.2 relates only to the specific obligation of the Contractor to correct the Work, and has no relationship to the time within which the obligation to comply with the Contract Documents may be sought to be enforced, nor to the time within which proceedings may be commenced to establish the Contractor's liability with respect to the Contractor's obligations other than specifically to correct the Work.

§ 12.3 ACCEPTANCE OF NONCONFORMING WORK

If the Owner prefers to accept Work that is not in accordance with the requirements of the Contract Documents, the Owner may do so instead of requiring its removal and correction, in which case the Contract Sum will be reduced as appropriate and equitable. Such adjustment shall be effected whether or not final payment has been made.

ARTICLE 13 MISCELLANEOUS PROVISIONS

§ 13.1 GOVERNING LAW

The Contract shall be governed by the law of the place where the Project is located except that, if the parties have selected arbitration as the method of binding dispute resolution, the Federal Arbitration Act shall govern Section 15.4.

§ 13.2 SUCCESSORS AND ASSIGNS

§ 13.2.1 The Owner and Contractor respectively bind themselves, their partners, successors, assigns and legal representatives to covenants, agreements and obligations contained in the Contract Documents. Except as provided in Section 13.2.2, neither party to the Contract shall assign the Contract as a whole without written consent of the other. If either party attempts to make such an assignment without such consent, that party shall nevertheless remain legally responsible for all obligations under the Contract.

§ 13.2.2 The Owner may, without consent of the Contractor, assign the Contract to a lender providing construction financing for the Project, if the lender assumes the Owner's rights and obligations under the Contract Documents. The Contractor shall execute all consents reasonably required to facilitate such assignment.

§ 13.3 WRITTEN NOTICE

Written notice shall be deemed to have been duly served if delivered in person to the individual, to a member of the firm or entity, or to an officer of the corporation for which it was intended; or if delivered at, or sent by registered or certified mail or by courier service providing proof of delivery to, the last business address known to the party giving notice.

§ 13.4 RIGHTS AND REMEDIES

§ 13.4.1 Duties and obligations imposed by the Contract Documents and rights and remedies available thereunder shall be in addition to and not a limitation of duties, obligations, rights and remedies otherwise imposed or available by law.

§ 13.4.2 No action or failure to act by the Owner, Architect or Contractor shall constitute a waiver of a right or duty afforded them under the Contract, nor shall such action or failure to act constitute approval of or acquiescence in a breach there under, except as may be specifically agreed in writing.

§ 13.5 TESTS AND INSPECTIONS

§ 13.5.1 Tests, inspections and approvals of portions of the Work shall be made as required by the Contract Documents and by applicable laws, statutes, ordinances, codes, rules and regulations or lawful orders of public authorities. Unless otherwise provided, the Contractor shall make arrangements for such tests, inspections and approvals with an independent testing laboratory or entity acceptable to the Owner, or with the appropriate public authority, and shall bear all related costs of tests, inspections and approvals. The Contractor shall give the Architect timely notice of when and where tests and inspections are to be made so that the Architect may be present for such procedures. The Owner shall bear costs of (1) tests, inspections or approvals that do not become requirements until after bids are received or

AIA Document A201™ – 2007. Copyright © 1911, 1915, 1918, 1925, 1937, 1951, 1958, 1961, 1963, 1966, 1970, 1976, 1987, 1997 and 2007 by The American Institute of Architects. **All rights reserved. WARNING: This AIA® Document is protected by U.S. Copyright Law and International Treaties. Unauthorized reproduction or distribution of this AIA® Document, or any portion of it, may result in severe civil and criminal penalties, and will be prosecuted to the maximum extent possible under the law.** This document was produced by AIA software at 12:30:07 on 10/15/2015 under Order No. 3613561640 which expires on 09/28/2016, and is not for resale.
User Notes: (3B9ADA0B)

CONFORMED

negotiations concluded, and (2) tests, inspections or approvals where building codes or applicable laws or regulations prohibit the Owner from delegating their cost to the Contractor.

§ 13.5.2 If the Architect, Owner or public authorities having jurisdiction determine that portions of the Work require additional testing, inspection or approval not included under Section 13.5.1, the Architect will, upon written authorization from the Owner, instruct the Contractor to make arrangements for such additional testing, inspection or approval by an entity acceptable to the Owner, and the Contractor shall give timely notice to the Architect of when and where tests and inspections are to be made so that the Architect may be present for such procedures. Such costs, except as provided in Section 13.5.3, shall be at the Owner's expense.

§ 13.5.3 If such procedures for testing, inspection or approval under Sections 13.5.1 and 13.5.2 reveal failure of the portions of the Work to comply with requirements established by the Contract Documents, all costs made necessary by such failure including those of repeated procedures and compensation for the Architect's services and expenses shall be at the Contractor's expense.

§ 13.5.4 Required certificates of testing, inspection or approval shall, unless otherwise required by the Contract Documents, be secured by the Contractor and promptly delivered to the Architect.

§ 13.5.5 If the Architect is to observe tests, inspections or approvals required by the Contract Documents, the Architect will do so promptly and, where practicable, at the normal place of testing.

§ 13.5.6 Tests or inspections conducted pursuant to the Contract Documents shall be made promptly to avoid unreasonable delay in the Work.

§ 13.6 INTEREST

Payments due and unpaid under the Contract Documents shall bear interest from the date payment is due at such rate as the parties may agree upon in writing or, in the absence thereof, at the legal rate prevailing from time to time at the place where the Project is located.

§ 13.7 TIME LIMITS ON CLAIMS

The Owner and Contractor shall commence all claims and causes of action, whether in contract, tort, breach of warranty or otherwise, against the other arising out of or related to the Contract in accordance with the requirements of the final dispute resolution method selected in the Agreement within the time period specified by applicable law, but in any case not more than 10 years after the date of Substantial Completion of the Work. The Owner and Contractor waive all claims and causes of action not commenced in accordance with this Section 13.7.

ARTICLE 14 TERMINATION OR SUSPENSION OF THE CONTRACT

§ 14.1 TERMINATION BY THE CONTRACTOR

§ 14.1.1 The Contractor may terminate the Contract if the Work is stopped for a period of 30 consecutive days through no act or fault of the Contractor or a Subcontractor, Sub-subcontractor or their agents or employees or any other persons or entities performing portions of the Work under direct or indirect contract with the Contractor, for any of the following reasons:

- **.1** Issuance of an order of a court or other public authority having jurisdiction that requires all Work to be stopped;
- **.2** An act of government, such as a declaration of national emergency that requires all Work to be stopped;
- **.3** Because the Architect has not issued a Certificate for Payment and has not notified the Contractor of the reason for withholding certification as provided in Section 9.4.1, or because the Owner has not made payment on a Certificate for Payment within the time stated in the Contract Documents; or
- **.4** The Owner has failed to furnish to the Contractor promptly, upon the Contractor's request, reasonable evidence as required by Section 2.2.1.

§ 14.1.2 The Contractor may terminate the Contract if, through no act or fault of the Contractor or a Subcontractor, Sub-subcontractor or their agents or employees or any other persons or entities

AIA Document A201™ – 2007. Copyright © 1911, 1915, 1918, 1925, 1937, 1951, 1958, 1961, 1963, 1966, 1970, 1976, 1987, 1997 and 2007 by The American Institute of Architects. **All rights reserved. WARNING: This AIA® Document is protected by U.S. Copyright Law and International Treaties. Unauthorized reproduction or distribution of this AIA® Document, or any portion of it, may result in severe civil and criminal penalties, and will be prosecuted to the maximum extent possible under the law.** This document was produced by AIA software at 12:30:07 on 10/15/2015 under Order No. 3613561640 which expires on 09/28/2016, and is not for resale.
User Notes:
(3B9ADA0B)

CONFORMED

performing portions of the Work under direct or indirect contract with the Contractor, repeated suspensions, delays or interruptions of the entire Work by the Owner as described in Section 14.3 constitute in the aggregate more than 100 percent of the total number of days scheduled for completion, or 120 days in any 365-day period, whichever is less.

§ 14.1.3 If one of the reasons described in Section 14.1.1 or 14.1.2 exists, the Contractor may, upon seven days' written notice to the Owner and Architect, terminate the Contract and recover from the Owner payment for Work executed, including reasonable overhead and profit, costs incurred by reason of such termination, and damages.

§ 14.1.4 If the Work is stopped for a period of 60 consecutive days through no act or fault of the Contractor or a Subcontractor or their agents or employees or any other persons performing portions of the Work under contract with the Contractor because the Owner has repeatedly failed to fulfill the Owner's obligations under the Contract Documents with respect to matters important to the progress of the Work, the Contractor may, upon seven additional days' written notice to the Owner and the Architect, terminate the Contract and recover from the Owner as provided in Section 14.1.3.

§ 14.2 TERMINATION BY THE OWNER FOR CAUSE

§ 14.2.1 The Owner may terminate the Contract if the Contractor

- **.1** repeatedly refuses or fails to supply enough properly skilled workers or proper materials;
- **.2** fails to make payment to Subcontractors for materials or labor in accordance with the respective agreements between the Contractor and the Subcontractors;
- **.3** repeatedly disregards applicable laws, statutes, ordinances, codes, rules and regulations, or lawful orders of a public authority; or
- **.4** otherwise is guilty of substantial breach of a provision of the Contract Documents.

§ 14.2.2 When any of the above reasons exist, the Owner, upon certification by the Initial Decision Maker that sufficient cause exists to justify such action, may without prejudice to any other rights or remedies of the Owner and after giving the Contractor and the Contractor's surety, if any, seven days' written notice, terminate employment of the Contractor and may, subject to any prior rights of the surety:

- **.1** Exclude the Contractor from the site and take possession of all materials, equipment, tools, and construction equipment and machinery thereon owned by the Contractor;
- **.2** Accept assignment of subcontracts pursuant to Section 5.4; and
- **.3** Finish the Work by whatever reasonable method the Owner may deem expedient. Upon written request of the Contractor, the Owner shall furnish to the Contractor a detailed accounting of the costs incurred by the Owner in finishing the Work.

§ 14.2.3 When the Owner terminates the Contract for one of the reasons stated in Section 14.2.1, the Contractor shall not be entitled to receive further payment until the Work is finished.

§ 14.2.4 If the unpaid balance of the Contract Sum exceeds costs of finishing the Work, including compensation for the Architect's services and expenses made necessary thereby, and other damages incurred by the Owner and not expressly waived, such excess shall be paid to the Contractor. If such costs and damages exceed the unpaid balance, the Contractor shall pay the difference to the Owner. The amount to be paid to the Contractor or Owner, as the case may be, shall be certified by the Initial Decision Maker, upon application, and this obligation for payment shall survive termination of the Contract.

§ 14.3 SUSPENSION BY THE OWNER FOR CONVENIENCE

§ 14.3.1 The Owner may, without cause, order the Contractor in writing to suspend, delay or interrupt the Work in whole or in part for such period of time as the Owner may determine.

§ 14.3.2 The Contract Sum and Contract Time shall be adjusted for increases in the cost and time caused by suspension, delay or interruption as described in Section 14.3.1. Adjustment of the Contract Sum shall include profit. No adjustment shall be made to the extent

- **.1** that performance is, was or would have been so suspended, delayed or interrupted by another cause for which the Contractor is responsible; or

AIA Document A201™ – 2007. Copyright © 1911, 1915, 1918, 1925, 1937, 1951, 1958, 1961, 1963, 1966, 1970, 1976, 1987, 1997 and 2007 by The American Institute of Architects. **All rights reserved. WARNING: This AIA® Document is protected by U.S. Copyright Law and International Treaties. Unauthorized reproduction or distribution of this AIA® Document, or any portion of it, may result in severe civil and criminal penalties, and will be prosecuted to the maximum extent possible under the law.** This document was produced by AIA software at 12:30:07 on 10/15/2015 under Order No. 3613561640 which expires on 09/28/2016, and is not for resale.
User Notes: (3B9ADA0B)

CONFORMED

.2 that an equitable adjustment is made or denied under another provision of the Contract.

§ 14.4 TERMINATION BY THE OWNER FOR CONVENIENCE

§ 14.4.1 The Owner may, at any time, terminate the Contract for the Owner's convenience and without cause.

§ 14.4.2 Upon receipt of written notice from the Owner of such termination for the Owner's convenience, the Contractor shall

.1 cease operations as directed by the Owner in the notice;

.2 take actions necessary, or that the Owner may direct, for the protection and preservation of the Work; and

.3 except for Work directed to be performed prior to the effective date of termination stated in the notice, terminate all existing subcontracts and purchase orders and enter into no further subcontracts and purchase orders.

§ 14.4.3 In case of such termination for the Owner's convenience, the Contractor shall be entitled to receive payment for Work executed, and costs incurred by reason of such termination, along with reasonable overhead and profit on the Work not executed.

ARTICLE 15 CLAIMS AND DISPUTES

§ 15.1 CLAIMS

§ 15.1.1 DEFINITION

A Claim is a demand or assertion by one of the parties seeking, as a matter of right, payment of money, or other relief with respect to the terms of the Contract. The term "Claim" also includes other disputes and matters in question between the Owner and Contractor arising out of or relating to the Contract. The responsibility to substantiate Claims shall rest with the party making the Claim.

§ 15.1.2 NOTICE OF CLAIMS

Claims by either the Owner or Contractor must be initiated by written notice to the other party and to the Initial Decision Maker with a copy sent to the Architect, if the Architect is not serving as the Initial Decision Maker. Claims by either party must be initiated within 21 days after occurrence of the event giving rise to such Claim or within 21 days after the claimant first recognizes the condition giving rise to the Claim, whichever is later.

§ 15.1.3 CONTINUING CONTRACT PERFORMANCE

Pending final resolution of a Claim, except as otherwise agreed in writing or as provided in Section 9.7 and Article 14, the Contractor shall proceed diligently with performance of the Contract and the Owner shall continue to make payments in accordance with the Contract Documents. The Architect will prepare Change Orders and issue Certificates for Payment in accordance with the decisions of the Initial Decision Maker.

§ 15.1.4 CLAIMS FOR ADDITIONAL COST

If the Contractor wishes to make a Claim for an increase in the Contract Sum, written notice as provided herein shall be given before proceeding to execute the Work. Prior notice is not required for Claims relating to an emergency endangering life or property arising under Section 10.4.

§ 15.1.5 CLAIMS FOR ADDITIONAL TIME

§ 15.1.5.1 If the Contractor wishes to make a Claim for an increase in the Contract Time, written notice as provided herein shall be given. The Contractor's Claim shall include an estimate of cost and of probable effect of delay on progress of the Work. In the case of a continuing delay, only one Claim is necessary.

§ 15.1.5.2 If adverse weather conditions are the basis for a Claim for additional time, such Claim shall be documented by data substantiating that weather conditions were abnormal for the period of time, could not have been reasonably anticipated and had an adverse effect on the scheduled construction.

AIA Document A201™ – 2007. Copyright © 1911, 1915, 1918, 1925, 1937, 1951, 1958, 1961, 1963, 1966, 1970, 1976, 1987, 1997 and 2007 by The American Institute of Architects. All rights reserved. WARNING: This AIA® Document is protected by U.S. Copyright Law and International Treaties. Unauthorized reproduction or distribution of this AIA® Document, or any portion of it, may result in severe civil and criminal penalties, and will be prosecuted to the maximum extent possible under the law. This document was produced by AIA software at 12:30:07 on 10/15/2015 under Order No. 3613561640 which expires on 09/28/2016, and is not for resale.
User Notes:
(3B9ADA0B)

CONFORMED

§ 15.1.6 CLAIMS FOR CONSEQUENTIAL DAMAGES

The Contractor and Owner waive Claims against each other for consequential damages arising out of or relating to this Contract. This mutual waiver includes

.1 damages incurred by the Owner for rental expenses, for losses of use, income, profit, financing, business and reputation, and for loss of management or employee productivity or of the services of such persons; and

.2 damages incurred by the Contractor for principal office expenses including the compensation of personnel stationed there, for losses of financing, business and reputation, and for loss of profit except anticipated profit arising directly from the Work.

This mutual waiver is applicable, without limitation, to all consequential damages due to either party's termination in accordance with Article 14. Nothing contained in this Section 15.1.6 shall be deemed to preclude an award of liquidated damages, when applicable, in accordance with the requirements of the Contract Documents.

§ 15.2 INITIAL DECISION

§ 15.2.1 Claims, excluding those arising under Sections 10.3, 10.4, 11.3.9, and 11.3.10, shall be referred to the Initial Decision Maker for initial decision. The Architect will serve as the Initial Decision Maker, unless otherwise indicated in the Agreement. Except for those Claims excluded by this Section 15.2.1, an initial decision shall be required as a condition precedent to mediation of any Claim arising prior to the date final payment is due, unless 30 days have passed after the Claim has been referred to the Initial Decision Maker with no decision having been rendered. Unless the Initial Decision Maker and all affected parties agree, the Initial Decision Maker will not decide disputes between the Contractor and persons or entities other than the Owner.

§ 15.2.2 The Initial Decision Maker will review Claims and within ten days of the receipt of a Claim take one or more of the following actions: (1) request additional supporting data from the claimant or a response with supporting data from the other party, (2) reject the Claim in whole or in part, (3) approve the Claim, (4) suggest a compromise, or (5) advise the parties that the Initial Decision Maker is unable to resolve the Claim if the Initial Decision Maker lacks sufficient information to evaluate the merits of the Claim or if the Initial Decision Maker concludes that, in the Initial Decision Maker's sole discretion, it would be inappropriate for the Initial Decision Maker to resolve the Claim.

§ 15.2.3 In evaluating Claims, the Initial Decision Maker may, but shall not be obligated to, consult with or seek information from either party or from persons with special knowledge or expertise who may assist the Initial Decision Maker in rendering a decision. The Initial Decision Maker may request the Owner to authorize retention of such persons at the Owner's expense.

§ 15.2.4 If the Initial Decision Maker requests a party to provide a response to a Claim or to furnish additional supporting data, such party shall respond, within ten days after receipt of such request, and shall either (1) provide a response on the requested supporting data, (2) advise the Initial Decision Maker when the response or supporting data will be furnished or (3) advise the Initial Decision Maker that no supporting data will be furnished. Upon receipt of the response or supporting data, if any, the Initial Decision Maker will either reject or approve the Claim in whole or in part.

§ 15.2.5 The Initial Decision Maker will render an initial decision approving or rejecting the Claim, or indicating that the Initial Decision Maker is unable to resolve the Claim. This initial decision shall (1) be in writing; (2) state the reasons therefor; and (3) notify the parties and the Architect, if the Architect is not serving as the Initial Decision Maker, of any change in the Contract Sum or Contract Time or both. The initial decision shall be final and binding on the parties but subject to mediation and, if the parties fail to resolve their dispute through mediation, to binding dispute resolution.

§ 15.2.6 Either party may file for mediation of an initial decision at any time, subject to the terms of Section 15.2.6.1.

§ 15.2.6.1 Either party may, within 30 days from the date of an initial decision, demand in writing that the other party file for mediation within 60 days of the initial decision. If such a demand is made and the party

AIA Document A201™ – 2007. Copyright © 1911, 1915, 1918, 1925, 1937, 1951, 1958, 1961, 1963, 1966, 1970, 1976, 1987, 1997 and 2007 by The American Institute of Architects. All rights reserved. WARNING: This AIA® Document is protected by U.S. Copyright Law and International Treaties. Unauthorized reproduction or distribution of this AIA® Document, or any portion of it, may result in severe civil and criminal penalties, and will be prosecuted to the maximum extent possible under the law. This document was produced by AIA software at 12:30:07 on 10/15/2015 under Order No. 3613561640 which expires on 09/28/2016, and is not for resale.
User Notes:
(3B9ADA0B)

CONFORMED

receiving the demand fails to file for mediation within the time required, then both parties waive their rights to mediate or pursue binding dispute resolution proceedings with respect to the initial decision.

§ 15.2.7 In the event of a Claim against the Contractor, the Owner may, but is not obligated to, notify the surety, if any, of the nature and amount of the Claim. If the Claim relates to a possibility of a Contractor's default, the Owner may, but is not obligated to, notify the surety and request the surety's assistance in resolving the controversy.

§ 15.2.8 If a Claim relates to or is the subject of a mechanic's lien, the party asserting such Claim may proceed in accordance with applicable law to comply with the lien notice or filing deadlines.

§ 15.3 MEDIATION

§ 15.3.1 Claims, disputes, or other matters in controversy arising out of or related to the Contract except those waived as provided for in Sections 9.10.4, 9.10.5, and 15.1.6 shall be subject to mediation as a condition precedent to binding dispute resolution.

§ 15.3.2 The parties shall endeavor to resolve their Claims by mediation which, unless the parties mutually agree otherwise, shall be administered by the American Arbitration Association in accordance with its Construction Industry Mediation Procedures in effect on the date of the Agreement. A request for mediation shall be made in writing, delivered to the other party to the Contract, and filed with the person or entity administering the mediation. The request may be made concurrently with the filing of binding dispute resolution proceedings but, in such event, mediation shall proceed in advance of binding dispute resolution proceedings, which shall be stayed pending mediation for a period of 60 days from the date of filing, unless stayed for a longer period by agreement of the parties or court order. If an arbitration is stayed pursuant to this Section 15.3.2, the parties may nonetheless proceed to the selection of the arbitrator(s) and agree upon a schedule for later proceedings.

§ 15.3.3 The parties shall share the mediator's fee and any filing fees equally. The mediation shall be held in the place where the Project is located, unless another location is mutually agreed upon. Agreements reached in mediation shall be enforceable as settlement agreements in any court having jurisdiction thereof.

§ 15.4 ARBITRATION

§ 15.4.1 If the parties have selected arbitration as the method for binding dispute resolution in the Agreement, any Claim subject to, but not resolved by, mediation shall be subject to arbitration which, unless the parties mutually agree otherwise, shall be administered by the American Arbitration Association in accordance with its Construction Industry Arbitration Rules in effect on the date of the Agreement. A demand for arbitration shall be made in writing, delivered to the other party to the Contract, and filed with the person or entity administering the arbitration. The party filing a notice of demand for arbitration must assert in the demand all Claims then known to that party on which arbitration is permitted to be demanded.

§ 15.4.1.1 A demand for arbitration shall be made no earlier than concurrently with the filing of a request for mediation, but in no event shall it be made after the date when the institution of legal or equitable proceedings based on the Claim would be barred by the applicable statute of limitations. For statute of limitations purposes, receipt of a written demand for arbitration by the person or entity administering the arbitration shall constitute the institution of legal or equitable proceedings based on the Claim.

§ 15.4.2 The award rendered by the arbitrator or arbitrators shall be final, and judgment may be entered upon it in accordance with applicable law in any court having jurisdiction thereof.

§ 15.4.3 The foregoing agreement to arbitrate and other agreements to arbitrate with an additional person or entity duly consented to by parties to the Agreement shall be specifically enforceable under applicable law in any court having jurisdiction thereof.

AIA Document A201™ – 2007. Copyright © 1911, 1915, 1918, 1925, 1937, 1951, 1958, 1961, 1963, 1966, 1970, 1976, 1987, 1997 and 2007 by The American Institute of Architects. **All rights reserved.** WARNING: This AIA® Document is protected by U.S. Copyright Law and International Treaties. Unauthorized reproduction or distribution of this AIA® Document, or any portion of it, may result in severe civil and criminal penalties, and will be prosecuted to the maximum extent possible under the law. This document was produced by AIA software at 12:30:07 on 10/15/2015 under Order No. 3613561640 which expires on 09/28/2016, and is not for resale.
User Notes: (3B9ADA0B)

CONFORMED

§ 15.4.4 CONSOLIDATION OR JOINDER

§ 15.4.4.1 Either party, at its sole discretion, may consolidate an arbitration conducted under this Agreement with any other arbitration to which it is a party provided that (1) the arbitration agreement governing the other arbitration permits consolidation, (2) the arbitrations to be consolidated substantially involve common questions of law or fact, and (3) the arbitrations employ materially similar procedural rules and methods for selecting arbitrator(s).

§ 15.4.4.2 Either party, at its sole discretion, may include by joinder persons or entities substantially involved in a common question of law or fact whose presence is required if complete relief is to be accorded in arbitration, provided that the party sought to be joined consents in writing to such joinder. Consent to arbitration involving an additional person or entity shall not constitute consent to arbitration of any claim, dispute or other matter in question not described in the written consent.

§ 15.4.4.3 The Owner and Contractor grant to any person or entity made a party to an arbitration conducted under this Section 15.4, whether by joinder or consolidation, the same rights of joinder and consolidation as the Owner and Contractor under this Agreement.

AIA Document A201™ – 2007. Copyright © 1911, 1915, 1918, 1925, 1937, 1951, 1958, 1961, 1963, 1966, 1970, 1976, 1987, 1997 and 2007 by The American Institute of Architects. **All rights reserved. WARNING: This AIA® Document is protected by U.S. Copyright Law and International Treaties. Unauthorized reproduction or distribution of this AIA® Document, or any portion of it, may result in severe civil and criminal penalties, and will be prosecuted to the maximum extent possible under the law.** This document was produced by AIA software at 12:30:07 on 10/15/2015 under Order No. 3613561640 which expires on 09/28/2016, and is not for resale.
User Notes: (3B9ADA0B)

CONFORMED

Additions and Deletions Report for
AIA® Document A201™ – 2007

This Additions and Deletions Report, as defined on page 1 of the associated document, reproduces below all text the author has added to the standard form AIA document in order to complete it, as well as any text the author may have added to or deleted from the original AIA text. Added text is shown underlined. Deleted text is indicated with a horizontal line through the original AIA text.

Note: This Additions and Deletions Report is provided for information purposes only and is not incorporated into or constitute any part of the associated AIA document. This Additions and Deletions Report and its associated document were generated simultaneously by AIA software at 12:30:07 on 10/15/2015.

PAGE 1

Turlock Regional Transit Center Phase 2
1418 N. Golden State Blvd.
Turlock, CA 95380

...

City of Turlock
156 S. Broadway, Suite 150
Turlock, CA 9580

...

Pires, Lipomi + Navarro Architects
1720 G Street
Modesto, CA 95354

Additions and Deletions Report for AIA Document A201™ – 2007. Copyright © 1911, 1915, 1918, 1925, 1937, 1951, 1958, 1961, 1963, 1966, 1970, 1976, 1987, 1997 and 2007 by The American Institute of Architects. **All rights reserved. WARNING: This AIA® Document is protected by U.S. Copyright Law and International Treaties. Unauthorized reproduction or distribution of this AIA® Document, or any portion of it, may result in severe civil and criminal penalties, and will be prosecuted to the maximum extent possible under the law.** This document was produced by AIA software at 12:30:07 on 10/15/2015 under Order No. 3613561640 which expires on 09/28/2016, and is not for resale.
User Notes: (3B9ADA0B)

CONFORMED

Certification of Document's Authenticity

AIA® Document D401™ – 2003

I, , hereby certify, to the best of my knowledge, information and belief, that I created the attached final document simultaneously with its associated Additions and Deletions Report and this certification at 12:30:07 on 10/15/2015 under Order No. 3613561640 from AIA Contract Documents software and that in preparing the attached final document I made no changes to the original text of AIA® Document A201™ - 2007, General Conditions of the Contract for Construction, as published by the AIA in its software, other than those additions and deletions shown in the associated Additions and Deletions Report.

_____

(Signed)

_____

(Title)

_____

(Dated)

AIA Document D401™ – 2003. Copyright © 1992 and 2003 by The American Institute of Architects. **All rights reserved.** **WARNING: This AIA® Document is protected by U.S. Copyright Law and International Treaties. Unauthorized reproduction or distribution of this AIA® Document, or any portion of it, may result in severe civil and criminal penalties, and will be prosecuted to the maximum extent possible under the law.** This document was produced by AIA software at 12:30:07 on 10/15/2015 under Order No. 3613561640 which expires on 09/28/2016, and is not for resale.
User Notes:
(3B9ADA0B)

SECTION 01 10 00

SUPPLEMENTARY CONDITIONS

These Supplementary Conditions amend or supplement the General Conditions, Section 01 00 00. All provisions which are not so amended or supplemented remain in full force and effect.

ARTICLE 1 – GENERAL PROVISIONS

SC-1.1.1 Delete Article 1.1.1 in its entirety.

SC-1.1.8 Delete Article 1.1.8 in its entirety.

To Article 1.1, add the following defined terms:

SC-1.1.9 CONFORMED CONSTRUCTION DOCUMENTS – Construction documents modified to include any addenda issued during the bidding process. Conformed construction documents are not contract part of the contract, and are provided only for convenience, if at all.

SC-1.1.10 NOTICE TO PROCEED – A letter issued by the Owner which informs the Contractor that the Work may begin at the designated site and outlines the anticipated construction start date, due date for Substantial Completion, and due date for Final Completion. The Notice to Proceed is issued after award of the Contract by the City Council and after the Contractor has provided all bonds, insurance documentation, and any other information as required by the project specifications as needing to be provided prior to the beginning of the Work.

SC-1.2.1 Add the following to Article 1.2.1:

The 2010 Edition of the State of California, Department of Transportation Standard Specifications and Standard Plans are hereby incorporated into the Work.

In case of conflict or discrepancy between any of the Contract Documents, the order of documents listed below shall be the order of precedence, with the first item listed having the highest precedence.

1. Contract Change Orders
2. Addenda
3. Agreement
4. Procurement and Contracting Requirements (Division 00)
5. Supplementary Conditions (Division 02)
6. General Conditions (Division 01)
7. Technical Specifications (Division 03 – 41)
8. Project Drawings
9. Notice to Contractors
10. Contractor’s accepted proposal
11. City of Turlock Standard Specifications
12. City of Turlock Standard Drawings
13. Caltrans Standard Specifications (2010 Edition)Caltrans Standard Plans (2010 Edition)

With regards to discrepancies or conflicts between written dimensions given on drawings and the scaled measurements, the written dimensions shall govern.

With regards to discrepancies or conflicts between large-scale drawings and small-scale drawings, the larger scale shall govern.

With regards to discrepancies or conflicts between detailed drawings and referenced standard drawings or plans, the detailed drawings shall govern.

In the event where provisions of codes, safety orders, contract documents, referenced manufacturer's specifications or industry standards are in conflict, the more restrictive and higher quality shall govern.

ARTICLE 2 – OWNER

SC-2.1.1 Delete Article 2.1.1 and insert the following in lieu thereof:

The Owner is the City of Turlock and is referred to throughout the Contract Documents as if singular in number. The City Council of the City of Turlock shall have express authority to bind the Owner with respect to all matters requiring the Owner's approval or authorization. Except as otherwise provided in Section 4.2.1, the Architect does not have such authority. The term "Owner" means the Owner or the Owner's authorized representative.

SC-2.1.2 Delete Article 2.1.1 and insert the following in lieu thereof:

Upon reasonable written request, Owner shall furnish Contractor with a current statement of record legal title and legal description of the lands upon which the Work is to be performed and Owner's interest therein as necessary for giving notice of or filing a mechanic's or construction lien against such lands in accordance with applicable Laws and Regulations.

SC-2.2.1 Delete Article 2.2.1 in its entirety

SC-2.2.2 Delete Article 2.2.2 and insert the following in lieu thereof:

Except for permits and fees that are the responsibility of the Contractor under the Contract Documents, the Owner shall secure and pay for necessary approvals, easements, assessments and charges required for construction, use or occupancy of permanent structures or for permanent changes in existing facilities. However, the Owner shall obtain the building permit on behalf of the Contractor and the Owner shall pay all building permit fees directly.

SC-2.2.5 Delete Article 2.2.5 and insert the following in lieu thereof:

Unless otherwise provided in the Contract Documents, the Owner shall furnish to the Contractor up to five (5) hard copies of the Contract Documents at the Contractor's request. The Contractor may make reproductions pursuant to Section 1.5.2.

ARTICLE 3 – CONTRACTOR

SC-3.2.4 Delete Article 3.2.4 and insert the following in lieu thereof:

If the Contractor believes that additional cost or time is involved because of clarifications or instructions the Architect issues in response to the Contractor's notices or requests for information pursuant to Sections 3.2.2 or 3.2.3, the Contractor may make Claims as provided in the current edition of the Caltrans Standard Specifications. If the Contractor fails to perform the obligations of Sections 3.2.2 or 3.2.3, the Contractor shall pay such costs and damages to the Owner as would have been avoided if the Contractor had performed such obligations. If the Contractor performs those obligations, The Contractor shall not be liable to the Owner or Architect for damages resulting from errors, inconsistencies or omissions in the Contract Documents, for differences between field measurements or conditions and the Contract Documents, or for nonconformities of the Contract Documents to applicable laws, statutes, ordinances, codes, rules and regulations, and lawful orders of public authorities.

SC-3.5 Add the following sentence to the end of Article 3.5:

The Contractor shall submit a complete and executed Guaranty Bond per Section 00 87 00 prior to attainment of Final Completion.

SC-3.7.1 Delete Article 3.7.1 and insert the following in lieu thereof:

The City of Turlock shall pay all Building Permit fees. Contractor shall obtain a no-fee encroachment permit and a City of Turlock business license prior to beginning the Work. Unless otherwise provided in the Contract Documents, the Contractor shall secure and pay for all other permits, fees, and licenses, necessary for proper execution and completion of the Work that are customarily secured after execution of the Contract and legally required at the time bids are received or negotiations concluded.

SC-3.7.4 Delete the last sentence of Article 3.7.4 and insert the following in lieu thereof:

If either party disputes the Architect's determination or recommendation, that party may make a claim as provided in the Caltrans Standard Specifications.

SC-3.7.5 Delete the last sentence of Article 3.7.5 and insert the following in lieu thereof:

Requests for adjustments in the Contract Price and Contract Time arising from the existence of such remains or features may be made as provided in the Caltrans Standard Specifications.

To Article 3.7, add the following section SC-3.7.6:

SC-3.7.6 Contractor shall obtain a City of Turlock business license prior to issuance of the Notice to Proceed. Full compensation for obtaining a business license shall be considered as included in the prices paid for the various contract items of work and no additional compensation will be allowed therefore. The cost of the business license is fifty cents per thousand dollars in revenue. Business Licenses are obtained through the Finance Division at Turlock City Hall, 156 S. Broadway, Suite 114. Additional information can be found on the City's website at http://ci.turlock.ca.us/doingbusinessinturlock/businesslicenses/newbusinesslicense.asp.

SC-3.10.1 Delete Article 3.10.1 and insert the following in lieu thereof:

The Contractor shall prepare and submit construction schedules in accordance with with Caltrans Standard Specifications Division 1, Part 8, Prosecution and Progress, with the exception that software need not be submitted for the Architect's or Engineer's use.

SC-3.12.7 Add the following sentence to the end of Article 3.12.7:

Except as may be provided in subsequent specifications, a submittal will be returned to the Contractor within 21 calendar days. When a submittal cannot be returned within that period, the Architect or Owner will, within a reasonable time after receipt of the submittal, give notice of the date by which that submittal will be returned. Submittal shall receive one of four review actions:

1. No Exceptions Taken – The submittal is approved without comments.
2. Supply as Noted – The submittal is approved, provided that the Contractor addresses the included comments.

3. Rejected – The submitted product cannot meet project requirements and is rejected. Contractor shall provide a separate product that meets project requirements as a resubmittal.
4. Resubmit – The information provided with the submittal does not meet project requirements, however, Architect has commented on some missing items that, if provided, may meet project requirements. Contractor shall resubmit the same product and provide additional information per the Architect's comments.

SC-3.12.8 Delete Article 3.12.8 and insert the following in lieu thereof:

The work shall be in accordance with approved submittals except that the Contractor shall not be relieved of the responsibility for deviations from requirements of the Contract Documents by the Architect's approval of Shop Drawings, Product Data, Samples or similar submittals unless the Contractor has specifically informed-the Architect in writing of such deviation at the time of submittal as part of a cover letter to the submittal itself, and as a written communication separate from the submittal cover letter, and (1) the Architect has given written approval to the specific deviation as a minor change in the Work, or (2) a Change Order or Construction Change Directive has been issued authorizing the deviation. The Contractor shall not be relieved of responsibility for errors or omissions in Shop Drawings, Product Data, Samples or similar submittals by the Architect's approval thereof. The Architect's review does not extend to accuracy of dimensions, quantities, or performance of equipment and systems designed by the Contractor, or means, methods, techniques, sequences, or procedures.

To Article 3.12, add the following sections:

SC-3.12.12 Manufacturer's Instructions are instructions, stipulations, directions, and recommendations issued in printed form by the manufacturer of a product addressing handling, installation, erection, and application of the product. Manufacturer's Instructions are not prepared especially for the Work. Submit manufacturer's instructions whenever made available by manufacturers and when installation, erection, or application in accordance with manufacturer's instructions is required by the Specifications.

SC-3.12.13 For all Product Data and Manufacturer's Instructions, Excise or cross out non-applicable information and clearly mark applicable information with citations to and terminology consistent with Contract Documents.

SC-3.12.14 Submittals, including Shop Drawings, Product Data, and Manufacturer's Instructions, shall be submitted electronically. However, Contractor will be required to provide up to four (4) hard copies of these documents if requested by the Architect or Owner.

SC-3.12.15 Resubmittals shall include a cover letter to explain how the Engineer's comments from the previous submittal were addressed. The cover letter shall address each comment in detail. Resubmittals that do not include the cover letter will not be reviewed.

SC-3.12.16 Costs incurred by Owner as a result of additional reviews of a particular submittal after the second time it has been reviewed shall be borne by the Contractor. Reimbursement to OWNER will be made by deducting such costs from Contractor's subsequent partial payments.

SC-3.15.1 Delete Article 3.15.1 and insert the following in lieu thereof:

The Contractor shall keep the premises and surrounding area free from accumulation of waste materials or rubbish caused by operations under the Contract. At completion of the Work, the Contractor shall remove waste materials, rubbish, the Contractor's tools, construction equipment, machinery and surplus materials from and about the Project. Contractor is required to provide final cleaning to remove all visible dirt and dust from all finished surfaces prior to Final Completion.

SC-3.17 Delete Article 3.17 in its entirety.

SC-3.18 Delete Article 3.18 in its entirety.

ARTICLE 4 – ARCHITECT

SC-4.2.1 Delete Article 4.2.1 and insert the following in lieu thereof:

The Architect will provide clarifications and interpretations of the Contract Documents and review of construction documents such as submittals, RFIs, payment requests, and change orders to the Owner. The City Engineer shall have authority to decide all questions which may arise regarding the interpretation of the Contract Documents. Contractor shall not proceed with the Work affected thereby until a written decision has been issued by the City Engineer or his designee.

SC-4.2.4 Delete Article 4.2.4 and insert the following in lieu thereof:

Except as otherwise provided in the Contract Documents or when direct communications have been specially authorized, the Architect and Contractor shall endeavor to communicate with each other through the Owner about matters arising out of or relating to the Contract. Communications by and with the Architect's consultants shall be through the Architect. Communications by and with Subcontractors and material suppliers shall be through the Contractor. Communications by and with separate contractors shall be through the Owner.

SC-4.2.5 Delete Article 4.2.5 and insert the following in lieu thereof:

Based on the Architect's evaluations of the Contractor's Applications for Payment, the Architect will review and certify the amounts due the Contractor and will recommend payment amounts to be made by the Owner.

SC-4.2.6 Delete Article 4.2.6 and insert the following in lieu thereof:

The Architect may recommend that the Owner reject Work that does not conform to the Contract Documents. Whenever the Architect considers it necessary or advisable, the Architect will have authority to require inspection or testing of the Work. However, neither this authority of the Architect nor a decision made in good faith either to exercise or not to exercise such authority shall give rise to a duty or responsibility of the Architect to the Contractor, Subcontractors, material and equipment suppliers, their agents or employees, or other persons or entities performing portions of the Work.

SC-4.2.8 Delete Article 4.2.8 and insert the following in lieu thereof:

The Architect may prepare Construction Change Directives with Owner’s approval to authorize minor changes in the Work as provided in Section 7.4. A Change Order shall not be made effective until executed between the Owner and the Contractor. The Architect will investigate and make determinations and recommendations regarding concealed and unknown conditions as provided in Section 3.7.4.

SC-4.2.10 Delete Article 4.2.10 in its entirety.

SC-4.2.11 Delete Article 4.2.11 and insert the following in lieu thereof:

The City Engineer or his designee will interpret and decide matters concerning performance under, and requirements of, the Contract Documents on written request of either the Architect or Owner. The City Engineer’s response to such requests will be made in writing within any time limits agreed upon or otherwise with reasonable promptness.

SC-4.2.12 Delete Article 4.2.12 and insert the following in lieu thereof:

The Architect may recommend interpretations and decisions to the City Engineer consistent with the intent of, and reasonably inferable from, the Contract Documents and will be in writing or in the form of drawings. When making such recommended interpretations and decisions, the Architect will endeavor to secure faithful performance by both Owner and Contractor, will not show partiality to either, and will not be liable for results of interpretations or decisions rendered in good faith.

SC-4.2.13 Delete Article 4.2.13 and insert the following in lieu thereof:

The City Engineer's decision on matters relating to aesthetic effect will be final if consistent with the intent expressed in the Contract Documents.

SC-4.2.14 Delete Article 4.2.14 and insert the following in lieu thereof:

The Architect will review and respond to requests for information about the Contract Documents. The Architect's response to such requests will be made in writing within ten days. If appropriate, the Architect will prepare and issue supplemental Drawings and Specifications in response to the requests for information.

ARTICLE 5 – SUBCONTRACTORS

SC-5.2 Delete Article 5.2 in its entirety.

SC-5.4 Delete Article 5.4 in its entirety.

ARTICLE 6 – CONSTRUCTION BY OWNER OR BY SEPARATE CONTRACTORS

SC-6.1.1 Delete Article 6.1.1 and insert the following in lieu thereof:

The Owner reserves the right to perform construction or operations related to the Project with the Owner's own forces, and to award separate contracts in connection with other portions of the Project or other construction or operations on the site. If the Contractor claims that delay or additional cost is involved because of such action by the Owner, the Contractor may make such Claim as provided in the Caltrans Standard Specifications. Contractor is informed that the Owner intends enter into a separate contract with a company to provide security cameras and access control to the Transit Center building and site. The separate contractor performing security and access control work is expected to mobilize to the site once the majority of the building construction is completed, but before Final Completion has been attained by the Contractor.

SC-6.1.4 Delete Article 6.1.4 in its entirety.

ARTICLE 7 – CHANGES IN THE WORK

SC-7.1.2 Delete Article 7.1.2 and insert the following in lieu thereof:

A Change Order shall be based upon agreement among the Owner and Contractor; A Construction Change Directive may be issued by the Owner or by the Architect and may or may not be agreed to by the Contractor; an order for a minor change in the Work may be issued by the Architect or Owner.

SC-7.2.1 Delete Article 7.2.1 and insert the following in lieu thereof:

A Change Order is a written instrument prepared by the Owner and signed by the Owner and Contractor stating their agreement upon all of the following:

1. The change in the Work;
2. The amount of the adjustment, if any, in the Contract Price; and
3. The extent of the adjustment, if any, in the Contract Time.

SC-7.3.1 Delete Article 7.3.1 and insert the following in lieu thereof:

A Construction Change Directive is a written order prepared by the Architect or Owner directing a change in the Work prior to agreement on adjustment, if any, in the Contract Sum or Contract Time, or both, brought on by Owner-requested changes in scope, changed conditions, errors, omissions, or inconsistencies in the contract documents which may or may not require an adjustment in the Contract Price and/or Contract Time. The Owner may by Construction Change Directive, without invalidating the Contract, order changes in the Work within the general scope of the Contract consisting of additions, deletions, or other revisions, the Contract Price and Contract Time being adjusted accordingly thereafter according to the terms of the Agreement.

SC-7.3.3 Delete Article 7.3.3 in its entirety.

SC-7.3.5 Delete Article 7.3.5 and insert the following in lieu thereof:

Upon receipt of a Construction Change Directive, the Contractor shall prepare a Change Order Request.

SC-7.3.6 Delete Article 7.3.6 in its entirety.

SC-7.3.7 Delete Article 7.3.7 in its entirety.

SC-7.3.9 Delete Article 7.3.9 and insert the following in lieu thereof:

The Owner shall not pay the Contractor for any portion of extra work included in a Contract Change Directive until such work is agreed to and executed in a Contract Change Order.

SC-7.3.10 Delete Article 7.3.10 and insert the following in lieu thereof:

When the Owner and Contractor agree with the adjustments in the Contract Price and Contract Time through the Change Order Request process, the Owner will prepare necessary paperwork for approval by the City Council of the City of Turlock as a Contract Change Order. Changes in scope and approval of cost and/or time adjustments are official only after approval of a Contract Change Order.

SC-7.4 Delete Article 7.4 and insert the following in lieu thereof:

The Architect and Owner have authority to order minor changes in the Work not involving adjustment in the Contract Sum or extension of the Contract Time and not inconsistent with the intent of the Contract Documents. Such changes shall be documented as Contract Change Directive(s).

To Article 7, add the following sections:

SC-7.5 CHANGE ORDER REQUESTS

SC-7.5.1 A Change Order Request is a document created by the Contractor which notifies the Owner of changes in scope, or changed conditions, errors, omissions, or inconsistencies in the

contract documents which may or may not require an adjustment in the Contract Price and/or Contract Time.

SC-7.5.2 Unless directed otherwise, Contractor shall not proceed with the work referenced in the Change Order Request until proposed adjustment to Contract Sum and Contract Time costs have been approved by all parties.

SC-7.5.3 A Change Order Request shall include documentation proposing a contract cost and/or time adjustment for review by the Owner and Architect for the purposes of arriving at a mutually agreeable lump sum. Contractor shall submit backup information for costs of labor, equipment, material, and agreeable markups. Backup information shall contain sufficient detail to allow a thorough review. The Architect and Owner will review backup documentation and issue a response to the Contractor as to agreement or disagreement with proposed adjustments to contract price and/or time. If attempts to arrive at a mutually agreeable lump sum amount fail, the change order amount will be determined on the basis of force account in accordance with the terms of the Agreement. When the Owner and Contractor agree with the adjustments in the Contract Price and Contract Time through the Change Order Request process, the Owner will prepare necessary paperwork for approval by the City Council of the City of Turlock as a Contract Change Order. Changes in scope and approval of cost and/or time adjustments are official only after approval of a Contract Change Order.

ARTICLE 8 – TIME

SC-8.1.1 Delete Article 8.1.1 and insert the following in lieu thereof:

Unless otherwise provided, Contract Time is the amount of time, including authorized adjustments, allotted in the Contract Documents for the attainment of Substantial Completion and Final Completion.

SC-8.2.2 Delete Article 8.2.2 and insert the following in lieu thereof:

The Contractor shall not prematurely commence operations on the site or elsewhere prior to issuance of the Notice to Proceed.

SC-8.3.1 Delete Article 8.3.1 and insert the following in lieu thereof:

If the Contractor is delayed at any time in the commencement or progress of the Work by an act or neglect of the Owner or Architect, or of an employee of either, or of a separate contractor employed by the Owner; or by changes ordered in the Work; or by labor disputes, fire, unusual delay in deliveries, unavoidable casualties or other causes beyond the Contractor's control; or by delay authorized by the Owner pending mediation and arbitration; or by other causes that the City Engineer determines may justify delay, then the Contract Time shall be extended by Change Order for such reasonable time as the City Engineer may determine.

SC-8.3.2 Delete Article 8.3.2 and insert the following in lieu thereof:

Claims relating to time shall be made in accordance with applicable provisions of the Caltrans Standard Specifications.

ARTICLE 9 – PAYMENTS AND COMPLETION

SC-9.2 Add the following paragraph immediately after section 9.2:

The Schedule of Values shall be generally in the same format as the contract specifications, divisions and subdivisions, with major items of work listed as separate line items within the schedule. The Schedule of Values shall be sufficiently detailed to allow for accurate evaluation of requests for payments. Each scheduled item shall be measured as a lump sum item. The Schedule of values shall provide a workable arrangement for reviewing and processing the required submittals and provides a reasonable allocation of the Contract Sum to component parts of the Work.

SC-9.3.1.1 Delete Article 9.3.1.1 and insert the following in lieu thereof:

Applications for payment must not include requests for payment on account of changes in the Work that have been properly authorized by Construction Change Directives or Change Order Requests, but not yet included in executed Contract Change Orders.

SC-9.4.2 Delete Article 9.4.2 and insert the following in lieu thereof:

The issuance of a Certificate for Payment will constitute a representation by the Architect to the Owner, based on the Architect's evaluation of the Work and the data comprising the Application for Payment, that, to the best of the Architect's knowledge, information and belief, the Work has progressed to the point indicated and that the quality of the Work is in accordance with the Contract Documents. The foregoing representations are subject to an evaluation of the Work for conformance with the Contract Documents upon Substantial Completion, to results of subsequent tests and inspections, to correction of minor deviations from the Contract Documents prior to completion and to specific qualifications expressed by the Architect. The issuance of a Certificate for Payment will not be a representation that the Architect has (1) made exhaustive or continuous site inspections to check the quality or quantity of the Work, (2) reviewed construction means, methods, techniques, sequences or procedures, (3) reviewed copies of requisitions received from Subcontractors and material suppliers and other data requested by the Owner to substantiate the Contractor's right to payment, or (4) made examination to ascertain how or for what purpose the Contractor has used money previously paid on account of the Contract Price.

SC-9.6.1 Delete Article 9.6.1 and insert the following in lieu thereof:

After the Architect has issued a Certificate for Payment, the Owner shall create an Invoice Submittal for Progress Payment based on the quantities indicated in the Certificate for Payment. The Invoice Submittal for Progress Payment will be routed to the Contractor for signature. Upon receipt of a signed copy of the Invoice Submittal, the Owner shall mail a check to the Contractor’s address as noted in their Bid Form within 14 days of receiving the signed Invoice Submittal for Progress Payment, and shall so notify the Architect.

SC-9.6.2 Delete Article 9.6.2 and insert the following in lieu thereof:

A prime contractor or subcontractor shall pay any subcontractor not later than 10 days of receipt of each progress payment in accordance with the provision in Section 7108.5 of the California Business and Professions Code concerning prompt payment to subcontractors. The 10 days is applicable unless a longer period is agreed to in writing. Any delay or postponement of payment over 30 days may take place only for good cause and with the agency’s prior written approval. Any violation of Section 7108.5 shall subject the violating contractor or subcontractor to the penalties, sanction and other remedies of that section. This requirement shall not be construed to limit or impair any contractual, administrative, or judicial remedies otherwise available to the contractor or subcontractor in the event of a dispute involving late payment or nonpayment by the prime contractor, deficient subcontract performance, or noncompliance by a subcontractor.

SC-9.7 Delete Article 9.7 in its entirety.

SC-9.8.1 Add the following paragraph immediately after section 9.8.1:

Substantial Completion shall include all Work for the Project, except for the following:

- Completion of minor punchlist items that do not prohibit use of the completed facility for its intended use and purpose
- Delivery of Operations and Maintenance manuals and the Facility Maintenance Plan
- Delivery of spare parts

SC-9.8.4 Delete Article 9.8.4 and insert the following in lieu thereof:

When the Work or designated portion thereof has been determined by the City Engineer to be substantially complete, and the Building Division has issued a certificate of occupancy, the City Engineer will prepare a Certificate of Substantial Completion. Unless otherwise noted in the Contract Documents, Contractor shall secure, maintain, and repair completed work until Final Completion has been attained, or upon partial use or occupancy, for that portion of the work occupied, whichever comes first. Warranties required by the Contract Document shall commence on the date of Final Completion. If City accepts, occupies, or beneficially uses any part of the completed work, then warranties for those portions of the work commence when accepted, occupied, or beneficially used.

SC-9.9.1 Delete Article 9.9.1 and insert the following in lieu thereof:

The Owner may occupy or use any completed or partially completed portion of the Work at any stage when such portion is designated as substantially complete and authorized by public authorities having jurisdiction over the Project. Additionally, partial occupancy or use may commence whether or not the portion is substantially complete by mutual agreement between Owner and Contractor, and authorized by public authorities having jurisdiction over the Project. Upon partial use or occupancy, the Owner shall take responsibility for regular maintenance of that portion of the Work and for repair of damage caused by vandalism. The warranty period for designated portions of the Work shall commence on the date of partial occupancy or use thereof, or the date of substantial completion, whichever comes first. When the Contractor considers a portion substantially complete, the Contractor shall prepare and submit a list to the Architect as provided under Section 9.8.2. Consent of the Contractor to partial occupancy or use shall not be unreasonably withheld. The stage of the progress of the Work shall be determined by written agreement between the Owner and Contractor or, if no agreement is reached, by decision of the Architect.

SC-9.10.2 Delete Article 9.10.2 and insert the following in lieu thereof:

Final payment shall not become due until the Contractor submits to the Architect (1) an affidavit that payrolls, bills for materials and equipment, and other indebtedness connected with the Work for which the Owner or the Owner's property might be responsible or encumbered (less amounts withheld by Owner) have been paid or otherwise satisfied, and (2), adequate documentation establishing payment or satisfaction of obligations, including lien(s) releases, release of any additional claims of which Owner has not been noticed, and encumbrances arising out of the Contract, to the extent and in such form as may be designated by the Owner. If Subcontractor refuses to furnish a release or waiver required by the Owner, Contractor may furnish a bond satisfactory to the Owner to indemnify the Owner against such lien. If such lien remains unsatisfied after payments are made, the Contractor shall refund to the Owner all money that the Owner may be compelled to pay in discharging such lien, including all costs and reasonable attorneys' fees. Final payment shall not include funds withheld from progress payments. Funds withheld will be released to the Contractor approximately 35 days after the approval of the Notice of Completion of the Work, in accordance with the City of Turlock Standard Specifications.

ARTICLE 10 – HAZARDOUS MATERIALS

SC-10.3.1 Add the following paragraph immediately after Section 10.3.1:

A phase 1 environmental site assessment was completed in 2009 for this site. The assessment revealed no evidence of recognized environmental conditions associated with the site. The environmental site assessment is not a Contract Document. Bidder/Contractor may obtain a copy for informational purposes upon request of the Owner.

SC-10.3.3 Delete Article 10.3.3 in its entirety.

SC-10.3.5 Delete Article 10.3.5 in its entirety.

SC-10.3.6 Delete Article 10.3.6 in its entirety.

ARTICLE 11 – INSURANCE AND BONDS

Delete the entirety of Article 11.1, 11.2, 11.3, and 11.4 and substitute the following in lieu thereof:

Insurance and bonds shall be as set forth in the Agreement.

ARTICLE 12 – UNCOVERING AND CORRECTION OF WORK

No changes are made to Article 12 with these Supplementary Conditions.

ARTICLE 13 – MISCELLANEOUS PROVISIONS

SC-13.1 Delete Section 13.1 in its entirety.

SC-13.2 Delete Section 13.2 in its entirety.

SC-13.3 Delete Section 13.3 in its entirety.

SC-13.4 Delete Section 13.4 in its entirety.

SC-13.5.1 Delete Section 13.5.1 and insert the following in lieu thereof:

Unless otherwise noted, City of Turlock will supply all acceptance testing. Coordination of said testing is the responsibility of Contractor through the public works inspector. The Contractor shall provide at least 24 hours' notice to the Engineer in advance of needing acceptance testing. If the Contractor request testing and the Contractor is not ready for the testing to occur, the Contractor shall be back charged the cover the cost of the testing firm. At sites chosen by the project inspector, City's testing laboratory will conduct all tests. Contractor shall supply any necessary equipment and or labor required to obtain all samples for the completion of the testing process. City of Turlock shall compensate the testing laboratory for all initial tests. Secondary and all other follow-up tests required due to failure of initial testing shall be reimbursed to City of Turlock based on the following schedule:

Water sample test: $300.00 Per Test
Compaction test: $100.00 Per Test

SC-13.5.2 Delete Section 13.5.2 in its entirety.

SC-13.5.3 Delete Section 13.5.3 in its entirety.

SC-13.5.4 Delete Section 13.5.4 in its entirety.

SC-13.6 Delete Section 13.6 in its entirety.

SC-13.7 Delete Section 13.7 in its entirety.

To Article 13, add the following:

SC-13.8 EXISTING SITE CONDITIONS:

Although the City of Turlock's soil conditions are homogenous and sandy in nature, various subsurface conditions such as hardpan, and ground water may be encountered. The Contractor may refer to the Geotechnical Report completed by Kleinfelder and dated December 10, 2014 for soil borings performed on the site. Said report is available upon request of the Owner. Contractor may rely upon the accuracy of the technical data contained in said report, but such report is not a Contract Document. Except for such reliance on such "technical data," Contractor may not rely upon or make any claim against Owner or Architect, or any of their officers, directors, members, partners, employees, agents, consultants, or subcontractors with respect to:

1. the completeness of such reports and drawings for Contractor's purposes, including, but not limited to, any aspects of the means, methods, techniques, sequences, and procedures of construction to be employed by Contractor, and safety precautions and programs incident thereto; or
2. other data, interpretations, opinions, and information contained in such reports or shown or indicated in such drawings; or
3. any Contractor interpretation of or conclusion drawn from any "technical data" or any such other data, interpretations, opinions, or information.

If additional subsurface information is desired by Contractor in order to submit a complete and accurate bid, it will be Contractor's responsibility and expense to verify the subsurface conditions by boring or other means necessary prior to bidding and/or performing work.

If Contractor believes that any subsurface or physical condition that is uncovered or revealed either:

1. is of such a nature as to establish that any technical data on which Contractor is entitled to rely is materially inaccurate; or
2. is of such a nature as to require a change in the Contract Documents; or
3. differs materially from that shown or indicated in the Contract Documents; or
4. is of an unusual nature, and differs materially from conditions ordinarily encountered and generally recognized as inherent in work of the character provided for in the Contract Documents;

then Contractor shall, promptly after becoming aware thereof and before further disturbing the subsurface or physical conditions or performing any Work in connection therewith, notify Owner and Architect in writing about such condition. Contractor shall not further disturb such condition or perform any Work in connection therewith (except as aforesaid) until receipt of written order to do so.

After receipt of written notice, Architect will promptly review the pertinent condition, determine the necessity of Owner's obtaining additional exploration or tests with respect thereto, and advise Owner in writing (with a copy to Contractor) of Architect's findings and conclusions.

The Contract Price or the Contract Times, or both, will be equitably adjusted to the extent that the existence of such differing subsurface or physical condition causes an increase or decrease in Contractor's cost of, or time required for, performance of the Work; provided that such condition meets any one or more of the categories described in the paragraphs above.

Contractor shall not be entitled to any adjustment in the Contract Price or Contract Times if:

1. Contractor knew of the existence of such conditions at the time Contractor made a final commitment to Owner with respect to Contract Price and Contract Times by the submission of a Bid or becoming bound under a negotiated contract; or
2. the existence of such condition could reasonably have been discovered or revealed as a result of any examination, investigation, exploration, test, or study of the Site and contiguous areas required by the Bidding Requirements or Contract Documents to be conducted by or for Contractor prior to Contractor's making such final commitment; or
3. Contractor failed to give the written notice as required above.

SC-13.9 EXISTING UNDERGROUND FACILITIES:

The information and data shown or indicated in the Contract Documents with respect to existing Underground Facilities at or contiguous to the Site is based on information and data furnished to Owner or Architect by the owners of such Underground Facilities, including Owner, or by others. Unless it is otherwise expressly provided in the Supplementary Conditions:

1. Owner and Architect shall not be responsible for the accuracy or completeness of any such information or data provided by others; and
2. the cost of all of the following will be included in the Contract Price, and Contractor shall have full responsibility for:

    a. reviewing and checking all such information and data;
    b. locating all Underground Facilities shown or indicated in the Contract Documents;
    c. coordination of the Work with the owners of such Underground Facilities, including Owner, during construction; and
    d. the safety and protection of all such Underground Facilities and repairing any damage thereto resulting from the Work.

If an Underground Facility is uncovered or revealed at or contiguous to the Site which was not shown or indicated, or not shown or indicated with reasonable accuracy in the Contract Documents, Contractor shall, promptly after becoming aware thereof and before further disturbing conditions affected thereby or performing any Work in connection therewith, identify the owner of such Underground Facility and give written notice to that owner and to Owner and Architect. Architect will promptly review the Underground Facility and determine the extent, if any, to which a change is required in the Contract Documents to reflect and document the consequences of the existence or location of the Underground Facility. During such time, Contractor shall be responsible for the safety and protection of such Underground Facility.

If Architect concludes that a change in the Contract Documents is required, a Contract Change Directive will be issued to reflect and document such consequences. An equitable adjustment shall be made in the Contract Price or Contract Times, or both, to the extent that they are attributable to the existence or location of any Underground Facility that was not shown or indicated or not shown or indicated with reasonable accuracy in the Contract Documents and that Contractor did not know of and could not reasonably have been expected to be aware of or to have anticipated. If Owner and Contractor are unable to agree on entitlement to or on the amount or extent, if any, of any such adjustment in Contract Price or Contract Times, Owner or Contractor may make a Claim therefor as provided in the current edition of the Caltrans Standard Specifications.

SC-13.10 PROJECT MEETINGS

Representatives of entities participating in meetings shall be qualified and authorized to act on behalf of entity each represents.

A pre-construction meeting will be held between Contractor and City prior to the beginning of construction. The exact time and place of this conference will be at a mutually agreeable time and place. Contractor's superintendent, Contractor's project manager(s), Owner, Architiect, representatives of utilities, major subcontractors and others involved in performance of the Work, and others necessary to agenda are required to be present. The purpose of the meeting is to establish working understanding between parties and to discuss construction schedule, review the process for the review of shop drawings and other submittals, applications for payment, and other subjects pertinent to execution of the Work. The pre-construction agenda will include, as a minimum:

1. Distribution of Contract Documents
2. Distribution and discussion of list of major subcontractors and suppliers
3. Proposed progress schedules and critical construction sequencing
4. Major equipment deliveries and priorities
5. Project coordination
6. Designation of responsible personnel
7. Procedures and Processing of:

    a. Contract Change Directives
    b. Change Order Requests
    c. Submittals
    d. Requests for Information
    e. Testing Procedures
    f. Applications for Payment
    g. Virtual Project Manager – Internet based construction documentation

8. Use of Site:
9. Temporary utilities.
10. Housekeeping procedures.

Construction progress meetings shall be held at least once every two weeks in a mutually agreeable place for the purpose of reviewing progress of the Work, reviewing the progress schedule, discussing applications for payment, record documents, expediting work of subcontractors or other organizations that are not meeting scheduled progress, resolve conflicts, coordinate the Work, and additional items of current interest that are pertinent to execution of the Work.

Architect or Owner's responsibility for progress meetings include:

1. Preside and conduct
2. Distribution of an agenda to each anticipated participant
3. Preparation of meeting minutes and distribution to attendees within seven working days after the meeting

Contractor's responsibility for progress meetings include:

1. Attendance by Contractor's superintendent and project manager(s)
2. Attendance by subcontractors actively engaged in the Work
3. Distribute copies a look ahead schedule to all attendees which include future activities beginning the date of the meeting and continuing for three weeks and include dates of listed activities built since the last progress meeting.
4. Provide a narrative of the 3 week look ahead schedule and discuss potential problems which may impede scheduled progress and corrective measures.

A post-construction meeting will be held 11 months after the date of Substantial Completion. The Owner and Architect will attend this meeting to inspect the Work and draft a list of warranty items to be completed or corrected by the Contractor. The Contractor may attend this meeting, though Contractor's attendance is not mandatory.

SC-13.11 PREVAILING WAGE

Attention is directed to Section 7-1.02K "Labor Code," of the Caltrans Standard Specifications.

Pursuant to Section 1773 of the Labor Code, the general prevailing wage rates in the county Stanislaus in which the work is to be done have been determined by the Director of the California Department of Industrial Relations. These wages are set forth in the General Prevailing Wage Rates for this project, available at 156 S. Broadway St, Turlock, CA 95380 and available from the California Department of Industrial Relations' Internet web site at http://www.dir.ca.gov/DLSR/PWD.

~~**The Federal minimum wage rates for this project as predetermined by the United States Secretary of Labor shall be determination # CA170029 02/17/2017 CA29 Modification # 3, unless otherwise modified by project addenda, and shall be incorporated into the final contract documents**~~. **The Federal minimum wage rates for this project as predetermined by the United States Secretary of Labor shall be determination # CA170029 03/10/2017 CA29 Modification # 6, unless otherwise modified by project addenda, and shall be incorporated into the final contract documents. (*Addendum 2*)** Addenda to modify the Federal minimum wage rates, if necessary, will be issued to holders of Bid book. Future effective general prevailing wage rates, which have been predetermined and are on file with the California Department of Industrial Relations are referenced but not printed in the general prevailing wage rates. The federal wage rates can be found at the following website: http://www.wdol.gov/dba.aspx (Search "CA29"). If there is a difference between the minimum wage rates predetermined by the Secretary of Labor and the general prevailing wage rates determined by the Director of the California Department of Industrial Relations for similar classifications of labor, the Contractor and subcontractors shall pay not less than the higher wage rate. The Department will not accept lower State wage rates not specifically included in the Federal minimum wage determinations. This includes "helper" (or other classifications based on hours of experience) or any other classification not appearing in the Federal wage determinations. Where Federal wage determinations do not contain the State wage rate determination otherwise available for use by the Contractor and subcontractors, the Contractor and subcontractors shall pay not less than the Federal minimum wage rate, which most closely approximates the duties of the employees in question.

SC-13.12 PUBLIC SAFETY

In addition to any other measures taken by Contractor pursuant to the provisions of the Standard Specifications and the General Conditions, Contractor shall install temporary precast concrete barrier rail between any lane carrying public traffic and any excavation, obstacle or storage area when the following conditions exist:

Excavations: Any excavation, the near edge of which is 12 feet or less from the edge of the lane, except;

(a) Excavations covered with sheet steel or concrete covers of adequate thickness to prevent accidental entry by traffic or the public.

(b) Excavations less than one foot deep.

(c) Trenches less than one foot wide for irrigation pipe or electrical conduit or excavations less than one foot in diameter.

(d) Excavations parallel to the lane for the purpose of pavement widening or reconstruction.

(e) Excavations in side slopes where the slope is steeper than 4:1.

(f) Excavations protected by existing barrier or railing.

At the end of each working day, if a difference of 0.50 feet exists between the elevation of the existing pavement and the elevation of any excavation within 2 feet of the traveled way, material shall be placed and compacted against the vertical cuts adjacent to the traveled way. During excavation operations, native material may be used for this purpose, however, once the placing of the structural section commences, structural material shall be used. The material shall be placed to the level of the elevation of the top of the existing pavement and tapered at a slope of 4:1 or flatter to the bottom of the excavation. Treated base shall not be used for the taper. Full compensation for placing the material on a 4:1 slope, regardless of the number of times it is required, and subsequent removing or reshaping of the material to the lines and grades shown on the plans shall be considered as included in the cost for other contract items of work and no additional compensation will be allowed therefore.

Personal vehicles of Contractor's employees shall not be parked on the traveled way or shoulders, including any section closed to public traffic. Whenever vehicles or equipment are parked on the shoulder within 6 feet of a traffic lane, the shoulder area shall be closed with traffic cones or portable delineators placed on a taper in advance of the parked vehicles or equipment and along the edge of the pavement at 25 foot intervals to a point not less than 25 feet past the last vehicle or piece of equipment.

A minimum of one paved traffic lane, not less than 12 feet wide, shall be open for use by public traffic in each direction of travel. The full width of the traveled way shall be open for use by public traffic on Saturdays, Sundays and designated legal holidays, after 4:00 p.m. on Fridays and the day preceding designated legal holidays and when construction operations are not actively in progress.

SC-13.13 SOUND CONTROL REQUIREMENTS:

Sound control shall be in accordance with Section 7 1.01I, “Sound Control Requirements,” of the Caltrans Standard Specifications and the following requirements.

The noise level from Contractor's operations, between the hours of 9:00 p.m. and 6:00 a.m., shall not exceed 86 dba at a distance of 50 feet. This requirement in no way relieves Contractor from responsibility for complying with local ordinances regulating noise level.

Said noise level requirements shall apply to all equipment on the job or related to the job, including but not limited to trucks, transit mixers or transient equipment that may or may not be owned by Contractor. The use of loud sound signals shall be avoided in favor of light warnings except those required by safety law for the protection of personnel.

Full compensation for conforming to the requirements of this section shall be considered as included in the prices paid for the various contract items of work involved and no additional compensation will be allowed therefore.

SC-13.14 WORKING HOURS

Contractor's working hours shall be between 7:00 a.m. and 5:00 p.m., Monday through Friday, excluding legal holidays. Contractor shall not work outside the above-mentioned working hours without prior written consent of Owner. If occasional weekend or holiday work is approved by the Owner, costs of inspection including any overtime, shall be borne by the Contractor.

Designated legal holidays are: January 1st, the third Monday in January, the third Monday in February, the last Monday in May, July 4th, the first Monday in September, November 11th, Thanksgiving Day, the day after Thanksgiving, and December 25th. When a designated legal holiday falls on a Sunday, the following Monday shall be a designated legal holiday. When a designated legal holiday falls on a Saturday, the preceding Friday shall be a designated legal holiday.

SC-13.15 STORMWATER POLLUTION PREVENTION

A. For the purposes of bidding, it is assumed that this project is a Risk Level 2 as defined under the SWRCB permit conditions.

1. The contractor is to pay for all requirements, fees, engineering, and other fees related to SWPPP permits.
2. Contractor is to confirm the risk level for the project.

B. Construction General Permit:

1. The CONTRACTOR shall furnish and submit all Permit Registration Documents (PRD's) to the State of California Water Resources Control Board to obtain approval of the Construction General Permit (CGP).
2. The PRD's shall include but are not limited to the Notice of Intent (NOI), Risk Determination Worksheet, Site Maps, Stormwater Pollution Prevention Plan (SWPPP), Annual Fees, and Owner Certification. It shall also include all other reports, calculations, studies, exhibits, and documentation required to obtain the CGP.
3. The PRD's and Annual Reports shall be electronically submitted into the Stormwater Multiple Application and Report Tracking System (SMARTS).
4. The CONTRACTOR shall also be responsible for maintaining the existing CGP active throughout the duration of the project. This shall include preparation of:

    a. Rain Event Action Plans (REAPs),
    b. Testing reports,
    c. Water quality testing reports,
    d. NAL reporting,
    e. Inspections reports required by the permit,
    f. Monitoring and all other items as required by the CGP.

5. All CGP documents shall be submitted to the OWNER for reference and a copy shall be located on site at all times.

C. Pollution Prevention Plan:

1. Prepare and submit a Stormwater Pollution Prevention Plan (SWPPP) in accordance with Section A of the General Construction Activity Stormwater Permit to the OWNER for reference.
2. Prepare and submit a monitoring program and reporting plan in accordance with Section B of the General Construction Activity Stormwater Permit to the OWNER for reference.
3. Submit to the OWNER for reference a Stormwater Pollution Prevention Plan detailing the placement of physical Best Management Practices (BMPs) required for installation and the methods used to comply with those BMPs directed at operational procedures, Monitoring Program, and Reporting Plan.
4. The plan shall specifically address and detail changes from the alternatives called out in this Section. The CONTRACTOR's preferred techniques shall show how it will comply with the stated objectives of the program.

D. The CONTRACTOR shall submit a copy of the BMP Handbook with each BMP to be utilized check marked to show compliance or marked to show deviation.
E. The entire plan shall be kept and maintained by the CONTRACTOR on the construction site during the duration of the project.
F. The CONTRACTOR shall be responsible for taking the proper actions to prevent contaminants and sediments from entering the storm sewer drainage system should any unforeseen circumstance occur. The CONTRACTOR shall take immediate action if directed by the OWNER, or if the CONTRACTOR observes contaminants and/or sediments entering the storm drainage system, to prevent further stormwater from entering the system.
G. The CONTRACTOR shall comply with the State Water Resources Control Board, Regional Water Quality Control Board, county, city, and other local agency requirements regarding stormwater discharges and management.
H. The CONTRACTOR shall not begin any construction work until the OWNER receives the State of California General Construction Activity Stormwater Permit. The CONTRACTOR shall allow the OWNER 30 days to obtain this permit after receipt of the information listed below.
I. The CONTRACTOR shall comply with the following prohibitions and limitations, which are contained in the Stormwater Permit:

1. Discharge prohibitions:

a. Discharges of materials other than stormwater, which are not otherwise regulated by a NPDES permit, to a separate stormwater sewer system or water of the nation are prohibited.
b. Stormwater discharges shall not cause or threaten to cause pollution, contamination (including sediment), or nuisance.
c. Stormwater discharges regulated by this general permit shall not contain a hazardous substance equal to or in excess of a reportable quantity listed in 40 CFR 117 and 40 CFR 302.

2. Receiving water limitations:

a. Stormwater discharges to any surface or groundwater shall not adversely impact human health or the environment.
b. Stormwater discharge shall not cause or contribute to a violation of any applicable water quality standards contained in the California Ocean Plan, Inland Surface Waters and Enclosed Bays and Estuaries Plan, or the applicable Regional Water Board's Basin Plan.

J. Requirements:

1. In order to comply with the permit mandates the Stanislaus County has developed a County-Wide Stormwater Pollution Prevention Program and summary of Best Management Practices (BMPs) that are suggested to be utilized by the CONTRACTOR. BMPs are measures or practices used to reduce the amount of pollution entering surface water. BMPs may take the form of a process, activity, or physical structure. Some BMPs are simple and can be put into place immediately, while others are more complicated and require extensive planning or space. They may be inexpensive or costly to implement. No additional compensation shall be made for implementation of BMPs.

K. The CONTRACTOR shall implement all activities required by the General Permit and as detailed in the Stormwater Pollution Prevention Plan, Monitoring Program, and Reporting Plan, and shall supply a Qualified SWPPP Practitioner (QSP) to oversee the installation of BMPs on the project and all visual and chemical monitoring required by the approved SWPPP.

L. The Stormwater Pollution Prevention Plan shall discuss any non-stormwater sources (i.e., landscaping irrigation, pipe flushing, street washing, and dewatering). In addition, the Plan shall include standard observation measures and best management practices, including best available technologies economically achievable and best conventional pollutant control technologies that are to be implemented in order to reduce the pollutant loading to the waters.

M. The CONTRACTOR shall amend the Stormwater Pollution Prevention Plan, Monitoring Program, and Reporting Plan whenever there is a change in construction or operations which may affect the discharge of pollutants to stormwater.

N. The Stormwater Pollution Prevention Plan shall also be amended if it is in violation of any conditions of the general permit or has not achieved the general objective of reducing pollutants in stormwater discharges.

O. All amendments shall be completed at no additional cost to the OWNER.

P. The CONTRACTOR shall submit to the Regional Water Quality Control Board an annual summary report including but not limited to: construction activities; project status; and documentation of non-stormwater discharge. The report shall be in accordance with all Regional Water Quality Control Board requirements.

Q. The CONTRACTOR shall submit to the State Water Resources Control Board, a Notice of Termination upon completion of all construction activities, in accordance with Section C of the General Construction Activity Stormwater Permit.

R. Street sweeping: At the end of each working day or as directed by the OWNER, the CONTRACTOR shall clean and sweep roadways and on-site paved areas of all materials attributed to or involved in the work. The CONTRACTOR shall not use water to flush down streets in place of street sweeping.

S. The CONTRACTOR shall keep a stockpile of spill cleanup materials, such as rags or absorbents, readily accessible on-site for spill prevention and control. The CONTRACTOR shall immediately contain and prevent leaks and spills from entering storm drains, and properly clean up and dispose of the waste and cleanup materials. If the waste is hazardous, the CONTRACTOR shall dispose of hazardous waste only at authorized and permitted treatment, storage, and disposal facilities, and use only licensed hazardous waste haulers to remove the waste off-site, unless quantities to be transported are below applicable threshold limits for transportation specified in State and Federal regulations.

T. The CONTRACTOR shall not perform vehicle or equipment cleaning on-site or in the street using soaps, solvents, degreasers, steam cleaning equipment, or equivalent methods.

SC-13.16 CONSTRUCTION WATER

The City will permit the use of a hydrant for construction purposes at no cost to the Contractor, provided that the following are abided by:

1. A spanner wrench shall be the only type of wrench used on fire hydrants.
2. Contractor shall be liable for the damages to or loss of all hydrants and associated water lines and equipment which result from the use of this equipment.
3. Water shall only be used within City limits.
4. The vehicle must be approved by City for approved backflow device.
5. Contractor shall pay a deposit on a water meter provided by the City. After the project has ended, the Contractor shall return the meter to the City for the release of the deposit.

Contractor shall obtain a no-fee monthly hydrant use permit for use of construction water for this project from the City of Turlock Municipal Services Department located at 156 S. Broadway Suite 270, Turlock, California 95380, ph:209-668-5590.

Use of city hydrants does not exempt Contractor from providing a water truck where hydrants cannot be utilized due to unsafe working conditions as deemed by the Owner.

SC-13.17 SURVEYING

Construction survey staking shall be provided by City. Contractor shall provide a staking request no less than 1 week prior to Contractor starting work and not less than 48 hours before the staking is required to continue construction. The Contactor shall provide unimpeded access to the site and allow City survey crew to perform their work.

Contractor shall protect all survey stakes and markers during construction. If survey stakes and/or markers are damaged or destroyed during the course of construction, by vandalism or by any other means, Contractor may submit a request to have the survey re-staked. If re-staking is required, Contractor shall be back charged at the fully burdened hourly rate for the survey crew and shall fully reimburse City for all necessary materials and equipment.

Preservation of existing monuments shall be Contractor's responsibility. Contractor shall notify City of all monuments that may/will be disturbed by construction operations. City will tie off said monuments and provide Contractor a notice to proceed.

Once Contractor is finished with its construction operations, City will relocate the monuments. Contractor shall install a monument will with concrete collar at each location which shall conform to the provisions in Section 25-1.01 "Survey Monuments" and Drawing M-1 "Monument Detail", of the City Standard Specifications and these specifications.

Contractor shall post all staking requests to Virtual Project Manager (VPM) under the Transmittal tab. See the supplementary conditions for information regarding VPM.

Prior to installation of formwork for concrete building structures, Contractor shall be required to notify the City a minimum of 48 hours in advance of scheduled formwork activities so that the City may complete a survey for the purposes of verifying horizontal and vertical placement. The Architect shall review the survey results and determine if the preparation of the building pad area is in conformance with the project plans and specifications. Contractor shall not proceed with installing formwork until after it is determined that the building pad area is in conformance with the project plans and specifications. After formwork is in place and prior to pouring any concrete, Contractor shall notify the City a minimum of 48 hours in advance for a survey of formwork. Upon completion of the survey, the Architect may either approve or disapprove of the formwork. Contractor shall not proceed with pouring concrete until after the Architect has certified that the area is in compliance with the project plans and specifications. Contractor shall be required to correct this work in a manner acceptable to the Architect and City if found to not be in conformance with the project plans and specifications at his/her own expense.

SC-13.18 INTERNET BASED CONSTRUCTION MANAGEMENT SYSTEM

General

The Architect, Owner, and Contractor shall utilize Virtual Project Manager (http://www.virtual-pm.com/), herein after called VPM, for submission of all data and documents (unless specified otherwise in this Section) throughout the duration of the Contract. VPM is an electronic project management system accessible through the Internet used to create, share, and review construction management documentation. VPM is provided by the Owner at no cost to the Contractor. VPM will be made available to all Contractors' personnel, subcontractor personnel, suppliers, consultants, Owner, and any of Owner's representatives or agents. The joint use of this system is to facilitate electronic exchange of information, automation of key processes, electronic notification of project activity, and overall management of contract documentation. VPM shall be the primary means of project information submission and management.

The Owner will establish the Contractor's access to VPM by enabling access and assigning user profiles to Contractor personnel, including subcontractors and suppliers, as requested by Contractor. All authorized personnel shall have an individual user profile; no joint-use or

shared user profiles will be allowed. Each user profile shall be assigned to a user group and have specific permission settings and privileges based on the user's need within VPM. Entry of information exchanged and transferred between the Contractor and its subcontractors and suppliers on VPM shall be the responsibility of the Contractor.

The Contractor shall use computer hardware and software that meets the requirements of the VPM system. As recommendations are modified by VPM, the Contractor will upgrade their system(s) to meet or exceed the recommendations. Upgrading of the Contractor's computer systems will not be justification for a cost or time modification to the Contract. The Contractor shall ensure its own connectivity to VPM through their internet service provider.

The Contractor shall be responsible for the validity of the information they place in VPM, for the training of their personnel to understand and utilize VPM, as well as the provision and accessibility of adequate resources to connect with VPM. Accepted users shall be knowledgeable in the use of computers, including Internet browsers, email programs, and the Portable Document Format (PDF) document type. The Contractor shall utilize the existing forms in VPM to the maximum extent possible. If a form does not exist in VPM the Contractor must include their own form or a form provided by the Owner as an attachment to a submittal, RFI, or other document within VPM. Note that only the following file types are accepted as attachments to documents within VPM: PDF files, Microsoft Word (DOC) files, Microsoft Excel (XLS) files, picture files (JPG, TIFF, BMP, JPEG, etc.). PDF documents will be created through electronic conversion prior to uploading, such as through a "print to file" feature or "save as pdf" feature, rather than optically scanned whenever possible.

Contractor shall provide a list of key VPM personnel for the Owner's acceptance. The list shall include the following information: first name, last name, address, title, office phone number, cell phone number, and email address. The Owner is responsible for adding and removing users from the system and establishing read, write, and approval permission levels.

VPM menu tabs

Standard Documents
This area is reserved for general documentation not related to a specific project. Only the Owner shall post content in this area. Examples of content found in this area are: the City of Turlock Standard Specifications and Drawings, the Caltrans Standard Specifications, and the Caltrans Standard Plans. All files are in PDF format.

Project Summary
The project summary tab provides an overall summary of the project. It includes the current weather, the working days remaining and a summary of work for the past week. The summary of work is generated from the City's project inspector and the daily logs. This tab is for information only and the Contractor shall not take any action here.

Task Manager
Not Used.

Change Order Manager
The change order manager tab shall be used to track Change Order Requests. Once the Architect and Owner agree that a Change Order Request is warranted, a new contract change order shall be created by the Owner in the change order manager tab. The Owner will finalize the contract change order through this tab. Once the change order is finalized, the Owner will present the contract change order at a City Council meeting. After City Council approval the Owner will make payment on the contract change order.

Transmittals

The transmittal tab shall be used to communicate general project information amongst all parties as well as used by the Contractor in the submission of certified payroll reports. The Owner will upload the project-specific information including: bid documents, conformed plans, conformed specifications and the Notice to Proceed to the transmittal tab. Transmittals are intended to replace the use of e-mail when such correspondence is for the use of the entire project team. The Owner reserves the right to publish e-mails to VPM that are sent to representatives of the Owner or Architect by the Contractor in order to provide a central location for project record keeping.

In addition to requirements set forth by the Department of Industrial Relations to upload certified payroll records for the State's records, the Contractor shall submit certified payroll reports on a weekly basis through the transmittal tab. Contractor shall create a new transmittal for each week and attach certified payroll reports and statements of non-performance for the Contractor and subcontractors.

Submittals

All submittals shall be submitted through the submittal tab. The preferred document type is PDF.

Each submittal shall have a unique number comprised of the specification section followed by a number for each product covered under a particular specification section. Resubmittals shall have the same number as the initial submittal, excepting that a decimal and a "1" shall follow the submittal number. For example, for a particular concrete mix design, the first submittal submitted under that section should be given the number 033000-1, and if any resubmittals are necessary, they would be subsequently labeled as 033000-1.1, 033000-1.2, 033000-1.3, and so on. The Contractor shall post re-submittals under the same VPM serial no. as the original submittal and write a comment directing Architect and Owner's attention to the newly submitted information. Additional submittals for different material is submitted under the same specification section, it would be given the number 033000-2, then 033000-3, and so on.

The Contractor shall submit progress invoices on the last working day of the month through the submittal tab.

RFIs

The RFI tab shall be used by the Contractor to request clarification of the Contract Documents. The Contractor shall create a RFI upon recognition of any event or question of fact arising from the contract work. The RFI type for this submittal shall be "Request for Information." The Engineer will also utilize the RFI tab in a similar manner when there is a question for the Contractor; this RFI type shall be "Response Required."

The Engineer will respond to a RFI submitted by the Contractor within seven calendar days. The Contractor shall proceed with the work unless otherwise ordered. The Contractor may protest the Engineer's response by submitting a claim in accordance with Section 5.25 "Notice of Potential Claim" of the special provisions.

If the Engineer states the RFI leads to a change in scope, change in conditions, differing site conditions or extra work; a contract change order will be issued.

Daily Logs

The daily log tab is used by the City to document the activities of the work, any correspondence or direction given in the field, safety concerns and general comments about the project. The Contractor shall utilize this tab to be apprised as to the working days charged to the contract. The information entered into the daily

log tab is used to populate the project summary tab. VPM automatically generates the weekly statement of working days (WSWD) from the information entered into the daily log tab. The WSWD shows the working days and non-working days charged for the reporting week.

Contractor will be allowed 15 days to protest in writing the correctness of the information shown on the WSWD. The Contractor shall submit a transmittal response stating what is being protested and the reasons for protest. The Engineer will respond to the protest. The Contractor may protest the Engineer's response by submitting a claim in accordance with the current edition of the Caltrans Standard Specifications.

SC-13.19 MOBILIZATION

Mobilization is intended to compensate the Contractor for operations including, but not limited to, those necessary for the movement of personal, equipment, supplies and incidentals to / from the project site; for the payment of premium cost and insurance for the project; for any necessary costs of acquisition of equipment, including purchase and mobilization expense; and for any other work and operations which must be performed or costs that must be incurred incident to the initiation of meaningful work at the site and for which payment is not otherwise provided in the contract.

Payment will be made at the contract lump sum price and according to the following schedule:

(1) When 5 percent of the original contract amount is earned, 50 percent of the amount bid for mobilization, or 5 percent of the original contract amount, whichever is less, may be paid.

(2) When 10 percent of the original contract amount is earned, 75 percent of the amount bid for mobilization or 7.5 percent of the original contract amount, whichever is less, may be paid.

(3) When 20 percent of the original contract amount is earned, 95 percent of the amount bid for mobilization, or 9.5 percent of the original contract amount, whichever is less, may be paid.

(4) When 50 percent of the original contract amount is earned, 100 percent of the amount bid for mobilization, or 10 percent of the original contract amount, whichever is less, may be paid.

(5) Upon completion of all work on the project, payment of any amount bid for mobilization in excess of 10 percent of the original contract amount will be paid.

SC-13.20 EARTHWORK

Earthwork shall conform to the provisions in Section 19, "Earthwork", of the Caltrans Standard Specifications and these specifications.

Surplus excavated material shall become the property of Contractor and shall be disposed of outside the right-of-way and shall conform to the provisions in Section 7-1.07, "Disposal of Materials Outside the Right of Way", of the City of Turlock Standard Specifications.

All import borrow shall be backfill material type "E" as described in section 19-3.06 of the Caltrans Standard Specifications. All backfill material shall be compacted at 95% relative compaction for the entire depth of imported material. The minimum compacted section shall be six inches and shall be composed of import borrow, existing material, or a combination of both.

SC-13.21 ACCESS RAMP

Access Ramps shall conform to the provisions of Section 13, “Concrete Construction” of the City Standard Specifications and the 2010 ADA Standards.

Contractor shall construct access ramps as located on the plans and in accordance with Section 13 of the City Standard Specifications.

Detectable warning surfaces shall be manufactured by ARMOR-TILE, or approved equal.

The Contractor shall install detectable warning surfaces in a manner that extends the entire width of the opening of the ramp for a depth of 3’.

SC-13.22 PAINT RED CURB

Contractor shall paint face and top of curbs red in accordance with the current MUTCD as identified on the project plans. Contractor shall submit one 1-gallon sample of the paint to be used.

SC-13.23 INSTALL ROADSIDE SIGN

Contractor shall install roadside signs and post in accordance with the City Standard Specifications, the Standard Drawings and these special provisions. All signs shall be high intensity prismatic.

SC-13.24 WORK ZONE MOBILITY

The Contractor shall provide a smooth and efficient flow of traffic, while retaining safety through the roadway work zone.

The Contractor shall develop and submit a temporary traffic control plan (TTCP) for review. The TTCP shall conform to the requirements of the City of Turlock’s Traffic Control Plan Checklist.

The Contractor will be allowed to close lanes of traffic to accomplish the Work, provided that one lane in each direction is open to traffic. If the Work requires closure of lanes that would make it impossible to leave one lane in each direction open to traffic, the Contractor will be allowed to use flaggers and have one lane of traffic open. The Contractor will bear the entire cost of the flagging.

The Contractor will not be allowed to close the road to traffic at any point.

Contractor shall meet the requirements outlined in Section 11 of the City of Turlock Standard Specifications.

The Contractor shall bear the full cost of flagging operations.

The Contractor shall only be allowed to place traffic control devices for closures of lanes in areas where Work is occurring. If an area is not being worked on, the traffic control devices must not restrict traffic.

In times of low visibility (dark, foggy, etc.) the Contractor shall affix flashing beacons to all traffic control devices in a standard method.

If any component in the traffic control system is displaced, or ceases to operate or function as specified, from any cause, during the progress of the work, Contractor shall immediately

repair said component to its original condition or replace said component and shall restore the component to its original location. The cost of repairing or replacing said traffic control devices shall be the responsibility of Contractor. The cost of supplying any and all traffic control devices shall be considered as included in other contract items of work and no additional compensation will be allowed therefore.

If the Contractor does not adhere to the accepted TTCP, the Contractor may not continue work for the remaining day and any subsequent days until Contractor corrects traffic control devices to adhere to the accepted TTCP. Such shut downs are not eligible for increases in working days or contract cost.

SC-13.25 Replace the entirety of Article 15.1 and substitute the following in lieu thereof:

Claims between the Owner and Contractor shall be addressed as provided by California Public Contract Code Section 9204, which is set forth in its entirety:

§ 9204. Legislative findings and declarations regarding timely and complete payment of contractors for public works projects; claims process
(a) The Legislature finds and declares that it is in the best interests of the state and its citizens to ensure that all construction business performed on a public works project in the state that is complete and not in dispute is paid in full and in a timely manner.
(b) Notwithstanding any other law, including, but not limited to, Article 7.1 (commencing with Section 10240) of Chapter 1 of Part 2, Chapter 10 (commencing with Section 19100) of Part 2, and Article 1.5 (commencing with Section 20104) of Chapter 1 of Part 3, this section shall apply to any claim by a contractor in connection with a public works project.
(c) For purposes of this section:

(1) “Claim” means a separate demand by a contractor sent by registered mail or certified mail with return receipt requested, for one or more of the following:
(A) A time extension, including, without limitation, for relief from damages or penalties for delay assessed by a public entity under a contract for a public works project.
(B) Payment by the public entity of money or damages arising from work done by, or on behalf of, the contractor pursuant to the contract for a public works project and payment for which is not otherwise expressly provided or to which the claimant is not otherwise entitled.
(C) Payment of an amount that is disputed by the public entity.
(2) “Contractor” means any type of contractor within the meaning of Chapter 9 (commencing with Section 7000) of Division 3 of the Business and Professions Code who has entered into a direct contract with a public entity for a public works project.
(3)(A) “Public entity” means, without limitation, except as provided in subparagraph (B), a state agency, department, office, division, bureau, board, or commission, the California State University, the University of California, a city, including a charter city, county, including a charter county, city and county, including a charter city and county, district, special district, public authority, political subdivision, public corporation, or nonprofit transit corporation wholly owned by a public agency and formed to carry out the purposes of the public agency.

(B) “Public entity” shall not include the following:

(i) The Department of Water Resources as to any project under the jurisdiction of that department.
(ii) The Department of Transportation as to any project under the jurisdiction of that department.
(iii) The Department of Parks and Recreation as to any project under the jurisdiction of that department.
(iv) The Department of Corrections and Rehabilitation with respect to any project under its jurisdiction pursuant to Chapter 11 (commencing with Section 7000) of Title 7 of Part 3 of the Penal Code.

(v) The Military Department as to any project under the jurisdiction of that department.

(vi) The Department of General Services as to all other projects.
(vii) The High-Speed Rail Authority.

(4) “Public works project” means the erection, construction, alteration, repair, or improvement of any public structure, building, road, or other public improvement of any kind.
(5) “Subcontractor” means any type of contractor within the meaning of Chapter 9 (commencing with Section 7000) of Division 3 of the Business and Professions Code who either is in direct contract with a contractor or is a lower tier subcontractor.

(d)(1)(A) Upon receipt of a claim pursuant to this section, the public entity to which the claim applies shall conduct a reasonable review of the claim and, within a period not to exceed 45 days, shall provide the claimant a written statement identifying what portion of the claim is disputed and what portion is undisputed. Upon receipt of a claim, a public entity and a contractor may, by mutual agreement, extend the time period provided in this subdivision.

(B) The claimant shall furnish reasonable documentation to support the claim.

(C) If the public entity needs approval from its governing body to provide the claimant a written statement identifying the disputed portion and the undisputed portion of the claim, and the governing body does not meet within the 45 days or within the mutually agreed to extension of time following receipt of a claim sent by registered mail or certified mail, return receipt requested, the public entity shall have up to three days following the next duly publicly noticed meeting of the governing body after the 45-day period, or extension, expires to provide the claimant a written statement identifying the disputed portion and the undisputed portion.

(D) Any payment due on an undisputed portion of the claim shall be processed and made within 60 days after the public entity issues its written statement. If the public entity fails to issue a written statement, paragraph (3) shall apply.

(2)(A) If the claimant disputes the public entity’s written response, or if the public entity fails to respond to a claim issued pursuant to this section within the time prescribed, the claimant may demand in writing an informal conference to meet and confer for settlement of the issues in dispute. Upon receipt of a demand in writing sent by registered mail or certified mail, return receipt requested, the public entity shall schedule a meet and confer conference within 30 days for settlement of the dispute.

(B) Within 10 business days following the conclusion of the meet and confer conference, if the claim or any portion of the claim remains in dispute, the public entity shall provide the claimant a written statement identifying the portion of the claim that remains in dispute and the portion that is undisputed. Any payment due on an undisputed portion of the claim shall be processed and made within 60 days after the public entity issues its written statement. Any disputed portion of the claim, as identified by the contractor in writing, shall be submitted to nonbinding mediation, with the public entity and the claimant sharing the associated costs equally. The public entity and claimant shall mutually agree to a mediator within 10 business days after the disputed portion of the claim has been identified in writing. If the parties cannot agree upon a mediator, each party shall select a mediator and those mediators shall select a qualified neutral third party to mediate with regard to the disputed portion of the claim. Each party shall bear the fees and costs charged by its respective mediator in connection with the selection of the neutral mediator. If mediation is unsuccessful, the parts of the claim remaining in dispute shall be subject to applicable procedures outside this section.

(C) For purposes of this section, mediation includes any nonbinding process, including, but not limited to, neutral evaluation or a dispute review board, in which an independent third party or board assists the parties in dispute resolution through negotiation or by issuance of an evaluation. Any mediation utilized shall conform to the timeframes in this section.

(D) Unless otherwise agreed to by the public entity and the contractor in writing, the mediation conducted pursuant to this section shall excuse any further obligation under Section 20104.4 to mediate after litigation has been commenced.

(E) This section does not preclude a public entity from requiring arbitration of disputes under private arbitration or the Public Works Contract Arbitration Program, if mediation under this section does not resolve the parties' dispute.

(3) Failure by the public entity to respond to a claim from a contractor within the time periods described in this subdivision or to otherwise meet the time requirements of this section shall result in the claim being deemed rejected in its entirety. A claim that is denied by reason of the public entity's failure to have responded to a claim, or its failure to otherwise meet the time requirements of this section, shall not constitute an adverse finding with regard to the merits of the claim or the responsibility or qualifications of the claimant.

(4) Amounts not paid in a timely manner as required by this section shall bear interest at 7 percent per annum.

(5) If a subcontractor or a lower tier subcontractor lacks legal standing to assert a claim against a public entity because privity of contract does not exist, the contractor may present to the public entity a claim on behalf of a subcontractor or lower tier subcontractor. A subcontractor may request in writing, either on his or her own behalf or on behalf of a lower tier subcontractor, that the contractor present a claim for work which was performed by the subcontractor or by a lower tier subcontractor on behalf of the subcontractor. The subcontractor requesting that the claim be presented to the public entity shall furnish reasonable documentation to support the claim. Within 45 days of receipt of this written request, the contractor shall notify the subcontractor in writing as to whether the contractor presented the claim to the public entity and, if the original contractor did not present the claim, provide the subcontractor with a statement of the reasons for not having done so.

(e) The text of this section or a summary of it shall be set forth in the plans or specifications for any public works project that may give rise to a claim under this section.

(f) A waiver of the rights granted by this section is void and contrary to public policy, provided, however, that (1) upon receipt of a claim, the parties may mutually agree to waive, in writing, mediation and proceed directly to the commencement of a civil action or binding arbitration, as applicable; and (2) a public entity may prescribe reasonable change order, claim, and dispute resolution procedures and requirements in addition to the provisions of this section, so long as the contractual provisions do not conflict with or otherwise impair the timeframes and procedures set forth in this section.

(g) This section applies to contracts entered into on or after January 1, 2017.

(h) Nothing in this section shall impose liability upon a public entity that makes loans or grants available through a competitive application process, for the failure of an awardee to meet its contractual obligations.

(i) This section shall remain in effect only until January 1, 2020, and as of that date is repealed, unless a later enacted statute, that is enacted before January 1, 2020, deletes or extends that date.

CONFORMED

CITY OF TURLOCK
Development Services Department
Engineering Division

156 S. Broadway, Suite 150
Turlock, CA 95380
Phone: (209) 668- 5520
Fax: (209) 668- 5563

TRAFFIC CONTROL PLAN CHECKLIST

When scheduled work requires the full or partial closure of a city street, the City of Turlock requires that a traffic control plan (TCP) be submitted for review by the Engineering Division. For a timely approval, each TCP should be submitted at least (1) week prior to the beginning of any work and should conform to the standards shown in this document. Please review and check off each item prior to submitting a TCP via mail, email, fax or in-person. This signed document should accompany the TCP when submitted.

☐ **Standards/Reference Material**: Plans should be completed in accordance with the California Manual of Uniform Traffic Control Devices (CA MUTCD), as well as the Work Area Traffic Control Handbook (WATCH). The CA MUTCD is available in .pdf form through the CalTrans website (http://www.dot.ca.gov/hq/traffops), while the WATCH is available through BNI Books by calling (888) BNI-BOOK.

☐ **Paper Size**: Plans should be submitted on 8.5"x11" (letter), 11"x17" (ledger) or 24"x36" paper sizes only. Multiple pages are acceptable if the TCP will not fit onto one page.

☐ **Dimensions**: Plans should show accurate dimensions between all relevant objects, to include, but not limited to: spacing between signs, length of tapers, length/width of work area, as well as any other dimensions likely to be needed to properly direct traffic. The TCP should be drawn in such a way that it accurately reflects the location of the fixed objects (i.e. if in reality a huge space exists between two objects, then don't draw them right next to each other).

☐ **Traffic Control Devices**: Plans should identify all traffic control devices, both by name and sign code, as well as by location through the proper placement on the TCP. This can be written next to the traffic control device, or through the use of a legend at the right side or bottom of the page. See the attached page for a list of commonly used sign codes approved for use in the State of California.

☐ **Dates/Times of work**: Plans should note the proposed dates, times, and duration of work; when work will be completed in phases, this should be noted as well. Even if a start and/or end date is not able to be determined in advance, the expected duration should be noted. Special consideration must be made for traffic controls used during hours of darkness or overnight. As always, the final approval for all work schedules is at the discretion of the public works inspector.

☐ **Contact Information** : Each TCP should include the name, company, phone number, fax number and/or email address (if applicable) of the person submitting the plan.

Complete closure of a city street for construction is not allowed, *except in special circumstances with the prior expressed consent of the City Engineer or his representative. Partial closures are acceptable when accompanied by flagmen, or alternative traffic control devices, that allow traffic to flow on a deviated path. If the Engineering Division has questions, we will direct them to the person listed as the contact. Once the TCP is approved, we will submit a copy of the approved plan to the contractor, as well as the appropriate public works inspector. Your signature below constitutes an understanding of the process as outlined above, as well as an agreement to follow and abide by its terms.*

Date: _____ Signature: _____
Phone Number: _____ Email: _____

Revised 11/2008

SC-13.25 USE OF SITE

STAGING AREA: The Contractor shall not impede use of the existing transit center, except as required to construct the improvements shown on the plan. The existing public parking lot on the Transit Center site and the undeveloped portion of the site may be used for construction staging. Any damage to existing City land or facilities used for staging shall be repaired by the Contractor to pre-construction conditions. If additional space is needed, Contractor must make arrangements for staging off-site. For off-site staging, Contractor shall enter into a written private land use agreement and provide a copy of the private land use agreement to the City. Prior to attainment of Final Completion, Contractor shall provide a copy of a letter authored and signed the private property owner stating that the property has been returned to owner's use and the condition of the property is in an acceptable condition. If used, Contractor shall include off-site staging areas in the SWPPP.

MODIFICATIONS TO PHASE 1 TRANSIT CENTER AREA: The Work requires alteration of the existing transit center area. The Contractor shall sequence the Work so as to minimize disruption of the existing facilities to a reasonable extent. The cost of sequencing limitations and constraints to maintain operation of the facility to a reasonable extent shall be considered included in the original contract cost. The contractor's accepted progress schedule must clearly identify when work activities will disrupt normal operation of the existing transit center. The Contractor shall give written notice a minimum of twenty one (21) calendar days in advance of any work activity that will disrupt normal operation of the existing transit center facility in any way. Adequate barricades, caution tape, signs, and other flagging materials or barriers shall be utilized to protect the public from interaction with construction areas.

The Contractor shall be allowed to work on elements of the work that restrict access to of buses and pedestrians to passenger waiting areas at the same time, (i.e. shade structures A, B, and C). However, once work begins that renders the area inaccessible to transit passengers, the Contractor must expeditiously work on that element until completion. For each working day that passengers may not access any of the existing passenger waiting areas, and Contractor is not expeditiously working on completion of that work, Contractor shall pay one hundred dollars ($100) per day to the City in a deductive change order.

Contractor shall maintain access for buses to enter the transit center passenger loading areas from a minimum of two different driveway entrances at all times.

PARKING: Contractor's employees may close the the Transit Center's existing public parking lot to public use to allow contractor to park personal vehicles and for use as a staging area for materials and equipment.

FIELD OFFICE: Maintaining a field office is not a requirement of these specifications. However, should the Contractor elect to utilize a field office, the Contractor may locate it on the Transit Center site, provided that the location is approved by the Owner prior to placement.

TEMPORARY CONSTRUCTION POWER: If needed, Contractor shall arrange and pay for temporary electric power with the local utility company, the Turlock Irrigation District. The cost of temporary power shall be considered as included in the original contract cost.

SC-13.26 SALVAGED MATERIALS

Contractor shall relocate salvaged materials as described in the plans. If no mention of location is made on the plans for an item to be salvaged, Contractor shall arrange for delivery of said item(s) to the City of Turlock Corporation Yard located at 701 S. Walnut Road. Contractor shall coordinate delivery of salvaged materials through the public works inspector.

SC-13.27 ROLE OF INSPECTORS

PUBLIC WORKS INSPECTOR: The assigned public works inspector is authorized to inspect the Work. Inspections may extend to entire or part of the Work and to preparation, fabrication, and manufacture of products for the Work. Deficiencies or defects in the Work, which have been observed, will be called to Contractor's attention.

The public works inspector does not have authority to:

1. Alter of waive provisions of Contract Documents outside of the established method defined in Article 7 – Changes In The Work of Division 01, General Conditions, and Division 02, Supplementary Conditions.
2. Inspect Contractor's means, methods, techniques, sequences, or procedures for construction.
3. Accept portions of the Work, issue instructions contrary to intent of Contract Documents, or act as foreman for Contractor.
4. Supervise, control, or direct Contractor's safety precautions or programs or inspect for safety conditions on Work site, or of persons thereon, whether Contractor's employees or others.

The public works inspector and City's project manager has authority to:

1. Conduct on-site observations of the Work in progress to assist Owner and Architect in determining when the Work is, in general in accordance with Contract Documents.
2. Report to Owner and Architect whenever inspector believes that Work is faulty, defective, does not conform to Contract Documents, or has been damaged; or whenever there is defective material or equipment; or whenever it is believed that the Work should be uncovered for observation or requires special testing.

BUILDING INSPECTOR: The Work requires conformance with applicable building codes as noted on the project plans. All construction or work for which compliance with applicable building codes is required is subject to inspection by the City of Turlock Building Division. The Building Inspector has authority to visit the construction site to inspect the work that is being performed and to ensure that it complies with the applicable building codes. A record of inspection shall be made on a job card maintained by the Building Inspector indicating whether completed portions of construction are satisfactory. The Building Inspector will notify the Contractor if any work is not in compliance with the relevant building codes. Any portions of the work which do not comply must be corrected before they can otherwise be concealed or covered up. The Building Inspector shall have no authority to interpret contract documents or requirements outside of the purview of applicable building codes.

SC-13.28 SUBSTITUTES AND "OR EQUALS":

A. Whenever an item of material or equipment is specified or described in the Contract Documents by using the name of a proprietary item or the name of a particular Supplier, the specification or description is intended to establish the type, function, appearance, and quality required. Unless the specification or description contains or is followed by words reading that no like, equivalent, or "or equal" item or no substitution is permitted, other items of material or equipment or material or equipment of other Suppliers may be submitted to for review under the circumstances described below.

1. "Or Equal" Items: If in the Architect's discretion an item of material or equipment proposed by Contractor is functionally equal to that named and sufficiently similar so that no change in related Work will be required, it may be considered by Architect as an "or-equal" item, in which case review and approval of the proposed item may, in Architect's sole discretion, be accomplished without compliance with some or all of the requirements for approval of proposed substitute

items. For the purposes of this paragraph, a proposed item of material or equipment will be considered functionally equal to an item so named if:

a. In the exercise of reasonable judgment Architect determines that: (i) it is at least equal in quality, durability, appearance, strength, and design characteristics; (ii) it will reliably perform at least equally well the function imposed by the design concept of the completed Project as a functioning whole, and;

b. Contractor certifies that: (i) there is no increase in cost to the City; and (ii) it will conform substantially, even with deviations, to the detailed requirements of the item named in the Contract Documents.

2. Substitute Items:

a. If in Architect's sole discretion an item of material or equipment proposed by Contractor does not qualify as an "or equal" item under paragraph A.1, it will be considered a proposed substitute item.

b. Contractor shall submit sufficient information as provided below to allow Architect to determine that the item of material or equipment proposed is essentially equivalent to that named and an acceptable substitute therefor. Requests for review of proposed substitute items of material or equipment will not be accepted by Architect from anyone other than Contractor.

c. The procedure for review by Architect will be as set forth in paragraph A.2.d, and as Architect may decide is appropriate under the circumstances.

d. Contractor shall first make written application to Architect for review of a proposed substitute item of material or equipment that Contractor seeks to furnish or use. The application shall certify that the proposed substitute item will perform adequately the functions and achieve the results called for by the general design, be similar in substance to that specified, and be suited to the same use as that specified. The application will state the extent, if any, to which the use of the proposed substitute item will prejudice Contractor's achievement of Substantial Completion on time, whether or not use of the proposed substitute item in the Work will require a change in any of the Contract Documents (or in the provisions of any other direct contract with City for work on the Project) to adapt the design to the proposed substitute item and whether or not incorporation or use of the proposed substitute item in connection with the Work is subject to payment of any license fee or royalty. All variations of the proposed substitute item from that specified will be identified in the application, and available engineering, sales, maintenance, repair, and replacement services will be indicated. The application will also contain an itemized estimate of all costs or credits that will result directly or indirectly from use of such substitute item, including costs of redesign and claims of other contractors affected by any resulting change, all of which will be considered by Architect in evaluating the proposed substitute item. Architect may require Contractor to furnish additional data about the proposed substitute item.

B. Substitute Construction Methods or Procedures: If a specific means, method, technique, sequence, or procedure of construction is shown or indicated in and expressly required by the Contract Documents, Contractor may furnish or utilize a substitute means, method, technique, sequence, or procedure of construction approved by Architect. Contractor shall submit sufficient information to allow Architect, in Architect's sole discretion, to determine that the substitute proposed is equivalent to that expressly called for by the Contract Documents. The procedure for review by Architect will be similar to that provided in subparagraph A.2.

C. Architect's Evaluation: Architect will be allowed a reasonable time within which to evaluate each proposal or submittal made pursuant to paragraphs A. and B.. Architect will be the sole judge of acceptability. No "or-equal" or substitute will be ordered, installed or utilized until Architect's review is complete, which will be evidenced by either a Change Order for a substitute or an approved Shop Drawing for an "or equal." Architect will advise Contractor in writing of any negative determination.

D. Special Guarantee: City may require Contractor to furnish at Contractor's expense a special performance guarantee or other surety with respect to any substitute.

E. Architect's Cost Reimbursement: Architect will record time required by Architect and Architect's Consultants in evaluating substitute proposed or submitted by Contractor pursuant to paragraphs A.2 and B. and in making changes in the Contract Documents (or in the provisions of any other direct contract with City for work on the Project) occasioned thereby. Whether or not Architect approves a substitute item so proposed or submitted by Contractor, Contractor shall reimburse City for the charges of Architect and Architect's Consultants for evaluating each such proposed substitute.

F. Contractor's Expense: Contractor shall provide all data in support of any proposed substitute or "or equal" at Contractor's expense.

SC-13.29 FACILITY MAINTENANCE PLAN:

Contractor shall provide a Facility Maintenance Plan. Provide three (3) copies of the Facility Maintenance Plan in 3-ring binders with rigid covers or spiral bound volumes with laminated covers. Tabs shall be used to separate content. An electronic PDF version shall also be provided.

The Facility Maintenance Plan includes the following elements:

- Table of Contents
- Preventative and routine maintenance plan for all equipment and components of the Work as specified by each equipment and component manufacturer
- Recommended maintenance and replacement schedule for equipment.
- General maintenance and cleaning instructions for all finished surfaces
- Replacement part information
- Manufacturer’s published Operation and Maintenance manuals for all equipment installed on the project. The model number with options and color selection shall be specified or highlighted within each manual for easy reference.
- Copies of product warranties and contact information for warranty work

SC-13.30 UNDERGROUNDING EXISTING OVERHEAD UTILITIES:

Existing overhead utilities, including fiber optic cable and power lines, are located along the Golden State Boulevard frontage of the Transit Center. These utilities will be undergrounded as part of the construction of the phase 2 project. Contractor shall furnish and install equipment and materials necessary for the undergrounding of above ground utilities as indicated in the Contract Documents and shall coordinate and comply with the Turlock Irrigation District in connection with this work. Refer to Appendix B of these Specifications and the project plans for the scope of work to be performed by the Contractor and TID.

ARTICLE 14 – TERMINATION OR SUSPENSION OF THE CONTRACT

SC-14.1 Delete Section 14.1 in its entirety.

SC-14.2 Delete Section 14.2 in its entirety.

SC-14.4 Delete Section 14.4 in its entirety.

ARTICLE 15 – CLAIMS AND DISPUTES

SC-15.1 Delete Section 15.1 and insert the following in lieu thereof:

~~**The process for dispute resolution and claims shall be as per the Caltrans Standard Specifications.**~~

Claims between the Owner and Contractor shall be addressed as provided by California Public Contract Code Section 9204, which is set forth in its entirety:
§ 9204. Legislative findings and declarations regarding timely and complete payment of contractors for public works projects; claims process
(a) The Legislature finds and declares that it is in the best interests of the state and its citizens to ensure that all construction business performed on a public works project in the state that is complete and not in dispute is paid in full and in a timely manner.
(b) Notwithstanding any other law, including, but not limited to, Article 7.1 (commencing with Section 10240) of Chapter 1 of Part 2, Chapter 10 (commencing with Section 19100) of Part 2, and Article 1.5 (commencing with Section 20104) of Chapter 1 of Part 3, this section shall apply to any claim by a contractor in connection with a public works project.
(c) For purposes of this section:

(1) "Claim" means a separate demand by a contractor sent by registered mail or certified mail with return receipt requested, for one or more of the following:
(A) A time extension, including, without limitation, for relief from damages or penalties for delay assessed by a public entity under a contract for a public works project.
(B) Payment by the public entity of money or damages arising from work done by, or on behalf of, the contractor pursuant to the contract for a public works project and payment for which is not otherwise expressly provided or to which the claimant is not otherwise entitled.
(C) Payment of an amount that is disputed by the public entity.
(2) "Contractor" means any type of contractor within the meaning of Chapter 9 (commencing with Section 7000) of Division 3 of the Business and Professions Code who has entered into a direct contract with a public entity for a public works project.
(3)(A) "Public entity" means, without limitation, except as provided in subparagraph (B), a state agency, department, office, division, bureau, board, or commission, the California State University, the University of California, a city, including a charter city, county, including a charter county, city and county, including a charter city and county, district, special district, public authority, political subdivision, public corporation, or nonprofit transit

corporation wholly owned by a public agency and formed to carry out the purposes of the public agency.

(B) "Public entity" shall not include the following:

(i) The Department of Water Resources as to any project under the jurisdiction of that department.
(ii) The Department of Transportation as to any project under the jurisdiction of that department.
(iii) The Department of Parks and Recreation as to any project under the jurisdiction of that department.
(iv) The Department of Corrections and Rehabilitation with respect to any project under its jurisdiction pursuant to Chapter 11 (commencing with Section 7000) of Title 7 of Part 3 of the Penal Code.

(v) The Military Department as to any project under the jurisdiction of that department.
(vi) The Department of General Services as to all other projects.
(vii) The High-Speed Rail Authority.

(4) "Public works project" means the erection, construction, alteration, repair, or improvement of any public structure, building, road, or other public improvement of any kind.
(5) "Subcontractor" means any type of contractor within the meaning of Chapter 9 (commencing with Section 7000) of Division 3 of the Business and Professions Code who either is in direct contract with a contractor or is a lower tier subcontractor.

(d)(1)(A) Upon receipt of a claim pursuant to this section, the public entity to which the claim applies shall conduct a reasonable review of the claim and, within a period not to exceed 45 days, shall provide the claimant a written statement identifying what portion of the claim is disputed and what portion is undisputed. Upon receipt of a claim, a public entity and a contractor may, by mutual agreement, extend the time period provided in this subdivision.

(B) The claimant shall furnish reasonable documentation to support the claim.

(C) If the public entity needs approval from its governing body to provide the claimant a written statement identifying the disputed portion and the undisputed portion of the claim, and the governing body does not meet within the 45 days or within the mutually agreed to extension of time following receipt of a claim sent by registered mail or certified mail, return receipt requested, the public entity shall have up to three days following the next duly publicly noticed meeting of the governing body after the 45-day period, or extension, expires to provide the claimant a written statement identifying the disputed portion and the undisputed portion.

(D) Any payment due on an undisputed portion of the claim shall be processed and made within 60 days after the public entity issues its written statement. If the public entity fails to issue a written statement, paragraph (3) shall apply.

(2)(A) If the claimant disputes the public entity's written response, or if the public entity fails to respond to a claim issued pursuant to this section within the time prescribed, the claimant may demand in writing an informal conference to meet and confer for settlement of the issues in dispute. Upon receipt of a demand in writing sent by registered mail or certified mail, return receipt requested, the public entity shall schedule a meet and confer conference within 30 days for settlement of the dispute.

(B) Within 10 business days following the conclusion of the meet and confer conference, if the claim or any portion of the claim remains in dispute, the public entity shall provide the claimant a written statement identifying the portion of the claim that remains in dispute and the portion that is undisputed. Any payment due on an undisputed portion of the claim shall be processed and made within 60 days after the public entity issues its written statement. Any disputed portion of the claim, as identified by the contractor in writing, shall be submitted to nonbinding mediation, with the public entity and the claimant sharing the associated costs equally. The public entity and claimant shall mutually agree to a mediator within 10 business days after the disputed portion of the claim has been identified in writing. If the parties cannot agree upon a mediator, each party shall select a mediator and those mediators shall select a qualified neutral third party to mediate with regard to the disputed portion of the claim. Each party shall bear the fees and costs charged by its respective mediator in connection with the selection of the neutral mediator. If mediation is unsuccessful, the parts of the claim remaining in dispute shall be subject to applicable procedures outside this section.

(C) For purposes of this section, mediation includes any nonbinding process, including, but not limited to, neutral evaluation or a dispute review board, in which an independent third party or board assists the parties in dispute resolution through negotiation or by issuance of an evaluation. Any mediation utilized shall conform to the timeframes in this section.

(D) Unless otherwise agreed to by the public entity and the contractor in writing, the mediation conducted pursuant to this section shall excuse any further obligation under Section 20104.4 to mediate after litigation has been commenced.

(E) This section does not preclude a public entity from requiring arbitration of disputes under private arbitration or the Public Works Contract Arbitration Program, if mediation under this section does not resolve the parties' dispute.

(3) Failure by the public entity to respond to a claim from a contractor within the time periods described in this subdivision or to otherwise meet the time requirements of this section shall result in the claim being deemed rejected in its entirety. A claim that is denied by reason of the public entity's failure to have responded to a claim, or its failure to otherwise meet the time requirements of this section, shall not constitute an adverse finding with regard to the merits of the claim or the responsibility or qualifications of the claimant.

(4) Amounts not paid in a timely manner as required by this section shall bear interest at 7 percent per annum.

(5) If a subcontractor or a lower tier subcontractor lacks legal standing to assert a claim against a public entity because privity of contract does not exist, the contractor may present to the public entity a claim on behalf of a subcontractor or lower tier subcontractor. A subcontractor may request in writing, either on his or her own behalf or on behalf of a lower tier subcontractor, that the contractor present a claim for work which was performed by the subcontractor or by a lower tier subcontractor on behalf of the subcontractor. The subcontractor requesting that the claim be presented to the public entity shall furnish reasonable documentation to support the claim. Within 45 days of receipt of this written request, the contractor shall notify the subcontractor in writing as to whether the contractor presented the claim to the public entity and, if the original contractor did not present the claim, provide the subcontractor with a statement of the reasons for not having done so.

(e) The text of this section or a summary of it shall be set forth in the plans or specifications for any public works project that may give rise to a claim under this section.

(f) A waiver of the rights granted by this section is void and contrary to public policy, provided, however, that (1) upon receipt of a claim, the parties may mutually agree to waive, in writing, mediation and proceed directly to the commencement of a civil action or binding arbitration, as applicable; and (2) a public entity may prescribe reasonable change order, claim, and dispute resolution procedures and requirements in addition to the provisions of this section, so long as the contractual provisions do not conflict with or otherwise impair the timeframes and procedures set forth in this section.

(g) This section applies to contracts entered into on or after January 1, 2017.

(h) Nothing in this section shall impose liability upon a public entity that makes loans or grants available through a competitive application process, for the failure of an awardee to meet its contractual obligations.

(i) This section shall remain in effect only until January 1, 2020, and as of that date is repealed, unless a later enacted statute, that is enacted before January 1, 2020, deletes or extends that date.

(*Addendum 2*)

SC-15.2 Delete Section 15.2 in its entirety.

SC-15.3 Delete Section 15.3 in its entirety.

SC-15.4 Delete Section 15.4 in its entirety.

END OF SECTION

CONFORMED

SECTION 02 00 00

EXISTING CONDITIONS

Phase 1 of the Turlock Regional Transit Center was completed in 2012 with funding from the American Reinvestment and Recovery Act, as administered through the Federal Transit Administration. The Transit Center provides a central location for transit users in the City of Turlock to access the City's fixed route system as well as the Stanislaus County and Merced bus systems. The existing transit center allows egress and ingress from three different driveway approaches: Del's Lane, W. Hawkeye Avenue, N. Golden State Boulevard.

Buried utilities exist within the existing transit center as constructed in 2011-2012. A PDF copy of as-built drawings may be obtained for informational purposes by contacting Stephen Fremming, Associate Civil Engineer, ph: 209-668-5417, sfremming@turlock.ca.us.

Existing overhead utilities, including fiber optic cable and power lines, are located along the Golden State Boulevard frontage of the Transit Center. These utilities will be undergrounded as part of the construction of the Phase 2 project. Contractor shall furnish and install equipment and materials necessary for the undergrounding of above ground utilities as indicated in the Contract Documents and shall coordinate and comply with the Turlock Irrigation District in connection with this work.

END OF SECTION

CONFORMED

SECTION 03 10 00

CONCRETE FORMING

PART 1 GENERAL

1.1 SUMMARY

A. Section Includes:
   1. Forms for cast-in-place concrete, with shoring, bracing, and anchorage.
   2. Form accessories.
   3. Stripping of forms.

B. Related Sections:
   1. Division 01: Administrative, procedural, and temporary work requirements.

1.2 REFERENCES

A. American Concrete Institute (ACI):
   1. 301 - Specifications for Structural Concrete for Buildings.
   2. 347 - Recommended Practice for Concrete Formwork.

B. American Society of Mechanical Engineers (ASME) A17.1 - Safety Code for Elevators and Escalators.

C. Engineered Wood Association (APA) PRP-108 - Performance Standards and Qualification Policy for Structural-Use Panels.

1.3 SUBMITTALS

A. Submittals for Review:
   1. Shop Drawings: Diagram of proposed construction joints not indicated on Drawings.

1.4 QUALITY ASSURANCE

A. Design formwork in accordance with ACI 301 and 347.

PART 2 PRODUCTS

2.1 MANUFACTURERS

A. Acceptable Manufacturers - Architectural Form Liners:
   1. Dayton Superior.
   2. Fitzgerqald Formliners.
   3. Greenstreak, Inc.

B. Acceptable Manufacturers – Void Forms:
   1. Surevoid Products, Inc.

C. Acceptable Manufacturers - Form Accessories:
   1. Dayton Superior.
   2. Greenstreak, Inc.
   3. Meadow Burke.

D. Substitutions: Not permitted.

2.2 MATERIALS

A. Forms:

1. Wood, metal, glass fiber, or other approved material that will not adversely affect surface of concrete and will provide or facilitate obtaining specified surface finish.
2. Wood:
   a. Concealed surfaces:
      1) Lumber, No. 2 Common or better, dressed to smooth contact surfaces, or:
      2) APA Rated Plyform Class I.
   b. Exposed surfaces: Non absorptive medium density overlay plywood.
3. Metal: Minimum 16 gage steel, tight fitting, stiffened to support concrete.

B. Void Forms:
1. Corrugated paper with wax-coated exterior and uniform cellular configuration.
2. Capable of supporting live and dead loads while maintaining full void depth indicated.
3. Designed to lose strength upon contact with soil moisture.
4. Soil retainers: 1/4 inch thick tempered hardboard.

C. Tubular Forms:
1. Round, spirally wound laminated fiberboard, surface treated with release agent, non reusable.

2.3 ACCESSORIES

A. Form Ties: Snap off type, adjustable length, 1 inch back break dimension, free of defects that could leave holes larger than 1 inch in concrete.

B. Form Release Agent: Nonstaining, colorless mineral oil that will not absorb moisture, stain concrete, or impair adhesion of coatings to be applied to concrete.

C. Construction Joints Forms: Formed galvanized steel, minimum 18 gage, with keyway.

D. Anchors and Fasteners: Size as required, sufficient strength to maintain forms in place while concrete is placed.

PART 3 EXECUTION

3.1 CONSTRUCTION

A. Construct formwork, shoring, and bracing to produce concrete of required shape, line, and dimension.

B. Arrange and assemble formwork with minimum joints, located to allow dismantling without damage to concrete.

C. Make joints watertight.

D. Provide chamfer strips in corners of forms to produce beveled external corners.

E. Camber formwork to compensate for deflection during concrete placement.

F. Adjust supports to take up settlement caused by concrete placement.

G. Provide temporary openings in formwork to allow cleaning and observation; locate at bottom of forms. Close with tight fitting panels flush with face of forms.

H. Construct forms for beams and girders so that sides may be removed without disturbing bottom of form or its support.

I. Clean contact and screed surfaces prior to concrete placement.

J. Construction Joints:
1. Unless otherwise indicated on drawings, each unit of construction is a single unit; place concrete continuously to provide monolithic construction.
2. Obtain Architect's approval of construction joint locations not indicated on Drawings.

3. Provide keys and dowels in joints.
4. Use construction joint form for joints in floor slabs. Set screed edge at required elevation. Secure to prevent movement.

K. Form Release Agent:
1. Apply form release agent to formwork prior to placing reinforcing, anchoring devices, and embedded items; follow manufacturer's instructions.
2. Do not allow agent to puddle in forms or to contact hardened concrete against which fresh concrete is to be placed.

L. Waterstops:
1. Install waterstops at below-grade joints in concrete.
2. Install continuously without displacing reinforcement.

M. Inserts and Embedded Parts:
1. Before concrete is placed, install inserts, anchor slots, anchor bolts, and embedded parts required for attachment of work.
2. Provide formed openings where required for pipes, conduits, sleeves, and other work passing through concrete members.
3. Maintain in position during concrete placement.

N. Form Removal:
1. Do not remove formwork until concrete has attained sufficient strength to resist dead loads plus applied live loads.
2. Remove formwork in manner that will not damage surfaces of concrete; patch work damaged during form removal operations.
3. Provide shoring, reshoring, and bracing as required.

O. Installation Tolerances:
1. Construct formwork to maintain tolerances required by ACI 301.

END OF SECTION

CONFORMED

SECTION 03 20 00

CONCRETE REINFORCING

PART 1 GENERAL

1.1 SUMMARY

A. Section Includes:
   1. Reinforcing bars, wire fabric, and accessories for cast-in-place concrete.

B. Related Sections:
   1. Division 01: Administrative, procedural, and temporary work requirements.

1.2 REFERENCES

A. American Concrete Institute (ACI) 301 - Specifications for Structural Concrete for Buildings.

B. ASTM International (ASTM):
   1. A185/A185M - Standard Specification for Welded Steel Wire Reinforcement, Plain, for Concrete.
   2. A615/A 615M - Standard Specification for Deformed and Plain Billet-Steel Bars for Concrete Reinforcement.
   3. A767 - Standard Specification for Zinc-Coated (Galvanized) Bars for Concrete Reinforcement.
   4. D3963 - Standard Specification for Fabrication and Jobsite Handling of Epoxy-Coated Reinforcing Steel.

C. American Welding Society (AWS) D1.4 - Structural Welding Code - Reinforcing Steel.

D. Concrete Reinforcing Steel Institute (CRSI):
   1. Manual of Practice.
   2. Publication 63 - Recommended Practice for Placing Reinforcing Bars.
   3. Publication 65 - Recommended Practice for Placing Bar Supports, Specifications and Nomenclature.

1.3 SUBMITTALS

A. Submittals for Review:
   1. Shop Drawings:
      a. Include bar sizes, spacings, laps, locations, and quantities of reinforcing bars, wire fabric, and accessories.
      b. Provide bending and cutting schedules.
      c. Show complete layout plan for each layer of reinforcing.

1.4 DELIVERY, STORAGE AND HANDLING

A. Deliver reinforcing to project site in bundles marked with tags indicating bar size, length, and mark.

B. Store reinforcing above ground in dry, well drained area; protect from corrosion.

PART 2 PRODUCTS

2.1 MATERIALS

A. Reinforcing Bars:
   1. ASTM A615/A615M, deformed billet steel, Grade as indicated on Drawings.
   2. Finish: Galvanized in accordance with ASTM A767, Class I.

B. Welded Wire Fabric:

1. ASTM A185/A185M. Furnish in flat sheets.
2. Finish: Galvanized in accordance with ASTM A767, Class I.

2.2 ACCESSORIES

A. Spacers, Chairs, Bolsters, and Bar Supports:
   1. Sized and shaped for strength and support of reinforcement during concrete placement.
   2. Galvanized or plastic coated steel for surfaces exposed to weather.

B. Tie Wire: Annealed steel, minimum 16 gage.

2.3 FABRICATION

A. Fabricate in accordance with ACI 301 and CRSI Manual.

B. Bend bars cold; do not heat or bend by makeshift methods. Discard damaged bars.

C. Welding: AWS D1.4.

D. Fabrication Tolerances:
   1. Sheared length: Plus or minus 1 inch.
   2. Bends in stirrups and ties: Plus or minus 1/2 inch.
   3. All other bends: Plus or minus 1 inch.

PART 3 EXECUTION

3.1 PREPARATION

A. Before placing in work, thoroughly clean reinforcing of loose rust, mill scale, dirt, oil, and other materials that could reduce bonding.

B. Inspect reinforcing left protruding for future bonding or following delay in work, and clean if necessary.

3.2 INSTALLATION

A. Install reinforcing in accordance with ACI 301, and CRSI Manual and Publications 63 and 65.

B. Accurately position reinforcing; securely tie at intersections.

C. Welding: AWS D1.4.

D. Install wire fabric reinforcing in longest practical lengths. Offset end laps in adjacent widths to prevent continuous lap.

E. Do not displace or damage vapor retarder.

F. Locate splices not indicated on Drawings at points of minimum stress.

G. Clean and reprotect galvanized surfaces cut or damaged during installation.

END OF SECTION

CONFORMED

SECTION 03 30 00

CAST-IN-PLACE CONCRETE

PART 1 GENERAL

1.1 SUMMARY

A. Section Includes:
1. Cast-in-place concrete for piers, foundations, paving, and slabs on grade.
2. Equipment pads.
3. Bases for flagpoles and lighting fixtures.

B. Related Sections:
1. Division 01: Administrative, procedural, and temporary work requirements.

1.2 REFERENCES

A. American Concrete Institute (ACI):
1. 301 - Structural Concrete for Buildings.
2. 305R - Hot Weather Concreting.
3. 306R - Cold Weather Concreting.
4. 308 - Standard Practice for Curing Concrete.
5. 318 - Building Code Requirements for Structural Concrete.

B. ASTM International (ASTM):
1. C31 - Standard Test Method for Method of Making and Curing Concrete Test Specimens in the Field.
2. C33 - Standard Specification for Concrete Aggregates.
3. C39 - Standard Test Method for Test Method for Compressive Strength of Cylindrical Concrete Specimens.
4. C94 - Standard Specification for Ready-Mixed Concrete.
5. C143 - Standard Test Method for Slump of Portland Cement Concrete.
6. C150 - Standard Specification for Portland Cement.
7. C171 - Standard Specification for Sheet Materials for Curing Concrete.
8. C172 - Standard Test Method for Method of Sampling Freshly Mixed Concrete.
9. C231 - Standard Test Method for Air Content of Freshly Mixed Concrete by the Pressure Method.
10. C260 - Standard Specification for Air-Entraining Admixtures for Concrete.
11. C309 - Standard Specification for Liquid Membrane-Forming Compounds for Curing Concrete.
12. C330 - Standard Specification for Lightweight Aggregates for Structural Concrete.
13. C494 - Standard Specification for Chemical Admixtures for Concrete.
14. C618 - Standard Specification for Fly Ash and Raw or Calcined Natural Pozzolans for Use as a Mineral Admixture in Portland Cement Concrete.
15. C1116/1116M - Standard Specification for Fiber-Reinforced Concrete and Shotcrete.
16. D1752 - Standard Specification for Preformed Sponge Rubber and Cork Expansion Joint Fillers for Concrete Paving and Structural Construction.

1.3 SUBMITTALS

A. Submittals for Review:
1. Concrete Mix Designs: Include:
   a. Proportions of cement, fine and coarse aggregates, fibrous reinforcing, and water.
   b. Combined aggregate gradation.
   c. Aggregate specific gravities and gradations.
   d. Water/cement ratio, design strength, slump, and air content.
   e. Type of cement and aggregates.
   f. Air dry density and split cylinder ratio for lightweight concrete.
   g. Type and proportion of admixtures.

h. Special requirements for pumping.
i. Range of ambient temperature and humidity for which design is valid.
j. Special characteristics of mix requiring precautions in mixing, placing, or finishing techniques to achieve finished product.

1.4 QUALITY ASSURANCE

A. Concrete Mix Design: In accordance with ACI 301, Method 1 or 2.

1.5 DELIVERY, STORAGE AND HANDLING

A. Mix and deliver concrete to project ready mixed in accordance with ASTM C94.

B. Schedule delivery so that pours will not be interrupted for over 15 minutes.

C. Place concrete on site within 90 minutes after proportioning materials at batch plant.

1.6 PROJECT CONDITIONS

A. Cold Weather Placement - Protect concrete work from physical damage or reduced strength that could be caused by frost, freezing actions, or low temperatures. Comply with ACI 306R and following requirements:
1. Air temperature at or expected to fall below 40 degrees F, uniformly heat water and aggregates before mixing to obtain a concrete mixture temperature of not less than 50 degrees F and not more than 80 degrees F at point of placement.
2. Do not use frozen materials or materials containing ice or snow. Do not place concrete on frozen subgrade or on subgrade containing frozen materials.
3. Do not use calcium chloride, salt, and other materials containing antifreeze agents or chemical accelerators unless otherwise accepted in mix designs.

B. Hot Weather Placement - Place concrete in accordance with ACI 305R and following requirements:
1. Cool ingredients before mixing to maintain concrete temperature at time of placement below 90 degrees F. Use chilled mixing water or chopped ice if water equivalent of ice is calculated in total amount of mixing water.
2. If required, cover reinforcing steel with water soaked burlap so that steel temperature will not exceed ambient air temperature.
3. Fog spray forms, reinforcing steel, and subgrade just before concrete is placed.
4. Use water-reducing retarding admixture when required by high temperatures, low humidity, or other adverse placing conditions.

PART 2 PRODUCTS

2.1 MANUFACTURERS

A. Acceptable Manufacturers - Concrete Chemicals:
1. BASF Corporation.
2. Dayton Superior.
3. W. R. Meadows, Inc.

B. Substitutions: Not permitted.

2.2 MATERIALS

A. Portland Cement: ASTM C150, Type I or III, gray color.

B. Aggregates:
1. Fine: ASTM C33, clean, hard, durable, uncoated natural sand, free from silt, loam, and clay.
2. Coarse: ASTM C33, clean, hard, durable, uncoated crushed stone, maximum size No. 467, Table No. 2.
3. Lightweight: ASTM C330, expanded shale or clay produced by rotary kiln method.

C. Fibrous Reinforcing: ASTM C1116/1116M, 100 percent virgin polypropylene, free from reprocessed olefin materials and specifically manufactured for use as concrete secondary reinforcement.

2.3 ACCESSORIES

A. Water: Clean and potable.

B. Admixtures:
1. Water reducing or water reducing/set retarding: ASTM C494, Type A or D.
2. Air entraining: ASTM C260.

C. Expansion Joint Filler: ASTM D1752, non asphaltic type.

D. Non Shrink Grout: Premixed, consisting of non-metallic aggregate, cement, water reducing and plasticizing agents; minimum 7,000 psi compressive strength at 28 days.

E. Bonding Agent: Two component modified epoxy resin.

F. Curing Compound: ASTM C1315

G. Curing Paper: ASTM C171, waterproof paper or polyethylene film.

2.4 MIXES

A. Proportions: In accordance with ACI 301.

B. Design concrete to yield characteristics indicated on drawings.

C. Use accelerating admixture in cold weather only when approved by Architect. Use of admixtures will not reduce cold weather placement requirements.

PART 3 EXECUTION

3.1 PREPARATION

A. Notify Architect and special inspector minimum 24 hours prior to placing concrete.

B. Accurately position anchor bolts, sleeves, conduit, inserts, and accessories. Do not cut reinforcing steel to facilitate installation of inserts or accessories.

C. Remove water and debris from forms and excavations.

D. Close openings left in forms for cleaning and inspection.

E. Prepare previously placed [and existing] concrete surfaces by cleaning with steel wire brush and applying bonding agent in accordance with manufacturer's instructions.

F. Where new concrete is doweled to existing, drill holes in existing concrete, insert steel dowels, and pack holes solid with non shrink grout.

3.2 PLACEMENT OF CONCRETE

A. Place concrete in accordance with ACI 301 and ACI 318.

B. Ensure reinforcement, inserts, and embedded parts are not disturbed during concrete placement.

C. Deposit concrete as nearly as possible in its final position to minimize handling and flowing.

D. Place concrete continuously between predetermined expansion, control, and construction joints.

E. Do not place partially hardened, contaminated, or retempered concrete.

F. Do not allow concrete to free fall over 8 feet; provide tremies, chutes, or other means of conveyance.

G. Consolidate concrete with mechanical vibrating equipment. Hand compact in corners and angles of forms.

H. Screed slabs level, to flatness tolerance of 1/8 inch in 10 feet.

3.3 PLACEMENT OF GROUT

A. Remove loose and foreign matter from concrete; lightly roughen bonding surface.

B. Just prior to grouting, thoroughly wet concrete surfaces; remove excess water.

C. Mix grout in accordance with manufacturer's instructions. Do not retemper.

D. Place grout continuously, by most practical means; avoid entrapped air. Do not vibrate grout.

3.4 PROTECTION

A. Immediately after placement, protect concrete from premature drying, excessively hot or cold temperatures, and mechanical injury.

B. Maintain concrete with minimal moisture loss at relatively constant temperature for period necessary for hydration of cement and hardening of concrete.

C. Provide artificial heat to maintain temperature of concrete above minimum specified temperature for duration of curing period.

D. Keep forms sufficiently wet to prevent cracking of concrete or loosening of form joints.

3.5 CURING

A. Cure concrete in accordance with ACI 308:
   1. Horizontal surfaces:
      a. Surfaces to receive additional toppings or setting beds: Use curing paper method.
      b. Other surfaces: Use either curing paper or curing compound method.
   2. Vertical surfaces: Use either wet curing or curing compound method.

B. Curing Compound Method:
   1. Spray compound on surfaces in two coats, applying second at right angle to first, at minimum rate recommended by manufacturer.
   2. Restrict traffic on surfaces during curing.

C. Curing Paper Method:
   1. Spread curing paper over surfaces, lapping ends and sides minimum 4 inches; maintain in place by use of weights.
   2. Remove paper after curing.

D. Wet Curing Method: Spray water over surfaces and maintain wet for 7 days.

3.6 CLEANING

A. Remove efflorescence, stains, oil, grease, and foreign materials from exposed surfaces.

3.7 FIELD QUALITY CONTROL

A. Testing and Inspection Services:
   1. Certify each delivery ticket.
   2. Record time at which concrete was discharged from truck.
   3. Monitor and record amount of water and water reducing admixture added to concrete at project site.
   4. Determine ambient temperature and temperature of concrete sample for each set of test cylinders.
   5. Test cylinders:
      a. Make test cylinders in accordance with ASTM C172; one set of 3 cylinders for each 100 cubic yards or fraction thereof placed in any one day, for each different class of concrete.
      b. Mold and cure cylinders in accordance with ASTM C31; test cylinders in accordance with ASTM C39; one at 7 days and two at 28 days.
   6. Slump tests: Make slump tests at beginning of each day's placement and for each set of test cylinders in accordance with ASTM C143.
   7. Air content: Determine total air content of air entrained concrete for each strength test in accordance with ASTM C231.

END OF SECTION

CONFORMED

SECTION 03 35 00

CONCRETE FINISHING

PART 1 GENERAL

1.1 SUMMARY

A. Section Includes:
1. Finishing concrete slabs and formed surfaces.
2. Floor sealer.
3. Stained concrete finish.
4. Floor scrubber equipment

B. Related Sections:
1. Division 01: General Requirements
2. Section 03 30 00 - Cast-In-Place Concrete.
3. Section 03 35 19 – Colored Concrete Finishing and Curing

1.2 REFERENCES

A. American Concrete Institute (ACI):
1. 301 - Structural Concrete for Buildings.
2. 302.1 - Guide for Concrete Floor and Slab Construction.

B. ASTM International (ASTM):
1. C309 - Standard Specification for Liquid Membrane-Forming Compounds for Curing Concrete.
2. E1155 - Standard Test Method for Determining Floor Flatness and Levelness Using the F-Number System (Inch-Pound Units).

1.3 DEFINITIONS

A. Specified Overall Value (SOV): Describes the flatness or levelness value which must be achieved when all measured values of that type on a given Test Surface are combined.

B. Minimum Local Value (MLV): Describes the flatness or levelness value below which repair or replacement is required and applies to Minimum Local Area.

C. Minimum Local Area (MLA): An area bounded by construction or contraction joints or by column lines or half-column lines, whichever is smaller; no boundary crosses a construction joint or expansion joint.

D. Level: Horizontal, normal to the direction of gravity. An envelope is defined by 2 level lines which are separated by stated distances.

1.4 SUBMITTALS

A. Submittals for Review:
1. Product Data: Descriptive data for sealer and concrete stain.
2. Samples: stained concrete samples.

1.5 QUALITY ASSURANCE

A. Installer Qualifications: Minimum 5 years experience in work of this Section.

B. Concrete Mix Design: Free from admixtures and additives not specifically approved by colorant or stain manufacturer.

C. Mockup:

1. Size: 4 x 8 feet min.
2. Show: Stained concrete finish and joint profile.
3. Locate [here directed
4. Approved mockup may remain as part of the Work.

PART 2 PRODUCTS

2.1 MANUFACTURERS

A. Acceptable Manufacturers - Concrete Stains:
1. Rustoleum. (www.rustoleum.com)
2. H and C Concrete Stains. (www.hc-concrete.com)
3. Kemiko Concrete Stains. (www.kemiko.com)
4. L.M. Scofield Co., Inc. (www.scofield.com)

B. Acceptable Manufacturers - Concrete Sealers:
1. BASF Corporation. (www.buildingsystems.basf.com)
2. Dayton Superior Corporation. (www.daytonsuperior.com)
3. W. R. Meadows, Inc. (www.wrmeadows.com)
4. Nox-Crete Products Group. (www.nox-crete.com)
5. Rustoleum (www.rustoleum.com)

C. Substitutions: Not permitted.

D. Floor Scrubber:
1. Contractor to purchase and provide to the City of Turlock the following new equipment:
- Wrangler 1503 AB/AE – 15” Compact Automatic Scrubber or approved equal

2.2 MATERIALS

A. Concrete Materials: Specified in Section 03 30 00.

B. Concrete Stain:
1. Source: Tint Base Concrete Stain by Rustoleum or approved substitute, sandstone color

C. Floor Sealer:
1. Type: ASTM C309, water based, acrylic copolymer resin.
2. Source: Concrete Sealer by Rustoleum or approved substitute.

2.3 MIXES

A. Patching Mortar:
1. Use same proportions as concrete except omit coarse aggregate.
2. Add minimum water required for handling and placing.

B. Mortar Slurry: 1 part Portland cement and 1-1/2 part damp, loose sand, by volume.

PART 3 EXECUTION

3.1 FINISHING FORMED SURFACES

A. Concealed Surfaces: Leave texture imparted by forms.

B. Exposed Surfaces:
1. While concrete is still green, patch voids over 1/2 inch in diameter or depth.
2. Chip away defective concrete; form edges perpendicular to surface. Wet area to be patched with clean water.
3. Apply bonding agent in accordance with manufacturer's instructions.
4. Press mortar into place; strike off slightly higher than surrounding surface. Allow initial shrinkage to occur before finishing.
5. Finish to match texture and color of adjacent surfaces.

CONFORMED

6. Remove fins and other protrusions by rubbing with carborundum stone while concrete is still green.

3.2 FINISHING INTERIOR FLOOR SURFACES

A. Finish concrete floor surfaces in accordance with ACI 301 and ACI 302.1.

B. Steel trowel surfaces to receive resilient flooring.

C. Steel trowel and fine broom finish surfaces to receive thin set tile.

D. Steel trowel and seal surfaces to be exposed. Apply sealer in accordance with manufacturer's instructions.

E. Steel trowel and stain surfaces where scheduled.
1. Apply stain in accordance with manufacturer's instructions, to uniform coverage.
2. Work stain into surface voids.
3. Prevent overlaps, application patterns, and streaks.
4. Apply color curing compound in accordance with manufacturer's instructions, to uniform coverage.

F. Tolerances:
1. Maximum variation of surface flatness for exposed concrete floors: 1/8 inch in 10 feet.
2. Maximum variation of surface flatness under tile: 1/8 inch in 10 feet.
3. Maximum variation of surface flatness under resilient flooring 1/8 inch in 10 feet.
4. Correct defects by grinding or removal and replacement of defective work. Re-measure corrected areas by same process.

3.3 FINISHING EXTERIOR SLAB SURFACES

A. Finish concrete slab surfaces in accordance with ACI 301.

B. Steel trowel and broom finish surfaces unless otherwise indicated.

C. Steel trowel and crossrake ramp surfaces.

D. Steel trowel and color surfaces where scheduled.
1. Apply colorant in accordance with manufacturer's instructions, to uniform coverage.
2. After application work colorant into surface by hand floating or power troweling.
3. After final application power trowel to smooth, hard, dense surface, without burnishing.
4. Prevent overlaps, application patterns, and streaks.
5. Apply color curing compound in accordance with manufacturer's instructions, to uniform coverage.

E. Tolerances:
1. Maximum variation of surface flatness: 1/4 inch in 10 feet.
2. Correct defects by grinding or removal and replacement of defective work. Re-measure corrected areas by same process.

END OF SECTION

CONFORMED

03 35 19

COLORED CONCRETE FINISHING AND CURING

1 - GENERAL

1.1 SUMMARY

A. Section Includes:

1. Dry-shake colored hardener applied to pavements where indicated on Drawings.
2. Curing of colored concrete.

1.2 REFERENCES

A. American Concrete Institute (ACI):

1. ACI 301 "Specification for Structural Concrete for Buildings."
2. ACI 302 IR "Recommended Practice for Concrete Floor and Slab Construction."
3. ACI 303.1 "Standard Specification for Cast-In-Place Architectural Concrete."
4. ACI 304 "Recommended Practice for Measuring, Mixing, Transporting and Placing of Concrete."
5. ACI 305R "Recommended Practice for Hot Weather Concreting."
6. ACI 306R "Recommended Practice for Cold Weather Concreting."

B. American Society of Testing and Materials (ASTM):

1. ASTM C309 "Standard Specifications for Liquid Membrane-Forming Compounds for Curing Concrete."
2. ASTM C494 "Standard Specification for Chemical Admixtures for Concrete."

1.3 ACTION SUBMITTALS

A. Product Data: Submit manufacturer's complete technical data sheets for the following:

1. Dry-shake colored hardener.
2. Curing compound.

B. Samples for Initial Selection: Manufacturer's color charts showing full range of colors available.

1.4 QUALITY ASSURANCE

A. Manufacturer Qualifications: Manufacturer with 10-years' experience in manufacture of specified products.

B. Installer Qualifications: An installer with 5-years' experience with work of similar scope and quality.

C. Comply with the requirements of ACI 301.

D. Obtain each specified material from same source and maintain high degree of consistency in workmanship throughout Project.

E. Notification of manufacturer's authorized representative shall be given at least 1-week before start of Work.

F. Colored Concrete Mockup:

1. At location on Project selected by the Engineer, place and finish 10 feet by 10 feet (3 by 3 m) area.
2. Construct mockup using processes and techniques intended for use on permanent work, including curing procedures. Include samples of control, construction, and expansion joints in sample panels. Mockup shall be produced by the individual workers who will perform the work for the Project.
3. Accepted mockup provides visual standard for work of Section.
4. Mockup shall remain through completion of the work for use as a quality standard for finished work.
5. Remove mockup when directed.

1.5 DELIVERY, STORAGE, AND HANDLING

A. Deliver products in original factory unopened, undamaged packaging bearing identification of product, manufacturer, batch number, and expiration data, as applicable.

B. Store the product in a location protected from damage, construction activity, and precipitation in strict accordance with the manufacturer's recommendations.

1.6 FIELD CONDITIONS

A. Schedule placements to minimize exposure to wind and hot sun before curing materials are applied.
B. Avoid placing concrete if rain, snow, or if frost is forecast within 24-hours. Protect fresh concrete from moisture and freezing.
C. Comply with professional practices described in ACI 305R and ACI 306R.

1.7 PRE-JOB CONFERENCE

A. One week prior to placement of concrete, a meeting shall be held to discuss the Project and application methods.

2 PRODUCTS

2.1 MATERIALS

A. Pre-approved manufacturer: L. M. Scofield Company, Douglasville, Georgia (800) 800-9900 or the appropriate local contact: Eastern Division – 201-672-9050; Western Division – 714-568-1870; Central Division Office – 630-377-5959.
    1. SUBSTITUTIONS: The use of products by other manufacturers other than those specified will be considered providing that the Contractor requests its use in writing within 14-days prior to date of the creation of the field mockup. This request shall be accompanied by the following:
        a. Certificate of compliance from material manufacturer stating that proposed products meet or exceed requirements of this Section.
        b. Documented proof that proposed materials have a 10-year proven record of performance confirmed by at least 5 local projects that design professional can examine.
B. Dry-shake Colored Hardener: LITHOCHROME® Color Hardener; L. M. Scofield company, factory proportioned, mixed, and packaged, ready-to-use surface hardener.
    1. Colors: A-21 Deep Charcoal, 1139 Burberry Beige.
C. Curing Compound for Dry-Shake Colored Hardener Concrete: Comply with ASTM C309 and be of same manufacturer as colored admixture, for use with dry-shake colored hardener concrete.
    1. Exterior Dry-Shake Colored Hardener Concrete Curing Compound: LITHOCHROME® Colorwax; L. M.Scofield company. Use to cure exterior flatwork that will be allowed to weather naturally with no or only occasional maintenance.
        a. Color: match color hardener

2.2 CONCRETE MIX DESIGN

A. Comply with the following:
    1. Minimum Cement Content: Six sacks per cubic yard of concrete.
    2. Slump of concrete shall be consistent throughout Project at 4-inches or less. At no time shall slump exceed 5-inches. If super plasticizers or mid-range water reducers are allowed, slump shall not exceed 8-inches.
B. Do not add calcium chloride to mix as it causes mottling and surface discoloration.
C. Supplemental admixtures shall not be used unless approved by manufacturer.
D. Do not add water to the mix in the field.
E. Maximum air content shall not exceed 5 percent.

3 – EXECUTION

3.1 CONCRETE PLACEMENT

A. Move concrete into place with square-tipped shovels or concrete rakes.
B. Vibrators, when used, shall be inserted and withdrawn vertically.
C. Concrete shall be struck to specified level with wood or magnesium straight edge or mechanical vibrating screed.
D. Concrete surface shall be further leveled and consolidated with highway magnesium straight edge and/or magnesium bull float.

E. Mechanically float concrete surfaces as soon as concrete surface has taken its initial set and will support weight of a power float machine equipped with float shoes or combination blades and operator.

3.2 INSTALLATION – DRY-SHAKE COLORED HARDENER

A. The coverage rate shall be a minimum of 90 pounds per 100 square feet.
B. Apply 2/3 of specified application rate to freshly floated concrete surface. Bleed water shall not be present during or following application of first and second shake.
C. Do not throw dry-shake; distribute evenly by hand or mechanical spreader designed to apply floor hardeners. Consult L. M. Scofield Company for recommended manufacturers of mechanical spreaders.
D. As soon as dry-shake material has absorbed moisture, indicated by uniform darkening of surface, mechanically float concrete surface a second time, just enough to bring moisture from base slab through dry-shake color hardener.
E. Immediately following second floating, apply remaining 1/3 of specified application rate. If applied by hand, broadcast in opposite direction of first application for a more uniform coverage. If a mechanical spreader is used, apply the same manner as previously described.
F. As soon as dry-shake material has absorbed moisture, mechanically float concrete surface a third time.
G. Do not add water to the surface.
H. As surface further stiffens, remove float blades to expose the power finishing blades or raise combination blades slightly. Flat trowel surface to remove marks and pinholes.
I. Further troweling operations can be done, each time raising blades, until desired texture or finish is obtained.
J. DO NOT BURNISH TROWEL COLORED SURFACE FLOOR HARDENERS.

3.3 CURING

A. Floors shall be cured with liquid membrane curing compound as recommended by manufacturer.
B. Apply immediately after floor surface has hardened sufficiently so that application of curing compound will not mar surface. Apply uniformly over entire surface at coverage rate recommended by manufacturer and meeting or exceeding the moisture retention requirements of ASTM C309.
C. There shall be no free water on surface at time of application.

3.4 PROTECTION OF FINISHED WORK

A. Prohibit foot or vehicular traffic on floor surface for the time specified by manufacturer, or until floor is properly protected from damage.
B. Barricade area to protect flooring.
C. Protect floor surface from damage until final inspection and acceptance by Owner

3.5 APPLICATOR

A. For a list of qualified contractors, contact your local L. M. Scofield Company representative or the appropriate Division Office: Eastern Division – 201-672-9050; Western Division – 714-568-1870; Central Division Office – 630-377-5959.

4 - PAYMENT

The contract price paid per square foot for “Colored Concrete Finishing and Curing” shall include full compensation for furnishing all labor, material, tools, equipment and incidentals, and for doing all the work involved in coloring, curing, and finishing of Portland cement concrete (PCC) pavement as specified herein, complete in place, as shown on the plans, as specified in the City of Turlock Standard Specifications and these special provisions, and as directed by the Engineer.

CONFORMED

SECTION 04 73 00

SIMULATED STONE VENEER

PART 1 GENERAL

1.1 SUMMARY

A. Related Documents: General and Supplementary Conditions of the Contract, Division 1 General Requirements, and Drawings are applicable to this Section.

B. Section Includes:

1. Simulated stone veneers for interior and exterior applications.
2. Reinforcement, anchorages, mortar, and accessories.

C. Related Sections:

1. Section 061000 – Rough Carpentry
2. Section 079200 – Joint Sealers
3. Section 092900 – Portland Cement Plaster

SUBMITTALS

D. Submit following in accordance with Division 01 General Conditions and Division 02 Supplementary Conditions:

1. Product Data: Submit for fabricated wire reinforcement and each type of stone specified. Include all applicable physical and performance data.
2. Samples: Submit 3 samples of simulated stone units to illustrate color, texture, and size range of each type unit.
3. Manufacturer's detailed installation instructions.
4. List of projects on which manufacturer has supplied simulated stone materials in the past 5 years.
5. Certifications listed in Quality Assurance article of Part 1 this Section.

1.2 FIELD SAMPLES

A. General: Comply with Division 01

B. Sample Installation: Construct stone wall at job site 6' x 6' (min.) in size, including mortar, special shapes, bonding, joint work, reinforcement, moisture barrier, grouting, corbelling, mortar color, expansion, control joints, and accessories.

1. Obtain Architect's approval before beginning work. Protect and retain sample as a basis on which the quality of the work will be judged. Do not remove until Substantial Completion.
2. Accepted Field Sample: May not remain as part of completed Work.

1.3 QUALITY ASSURANCE

A. Installer: Minimum 5 years experience in similar types of work of similar scope and be able to furnish list of previous jobs and references if requested by Architect.

B. Fabricator: Licensee of manufacturer with not less than 5 years experience manufacturingsimulated stone products of size, type, and quantity as required for this project.

CONFORMED

C. Expansion Joints: Provide expansion joints as indicated on Drawings or, if not indicated, install at frequency and in accordance with details and as recommended by manufacturer. Confirm locations and frequency with Architect before beginning work.

D. Certifications:

1. Provide written documentation that products have met or exceeded at least one of the following certifications for a minimum of 10 years:
   a. ICBO – International Conference of Building Officials;
   b. SBCCI – Southern Building Code Congress International;
   c. BOCA – Building Officials and Code Administrators International; or
   d. ICC-International Code Council.
2. Provide written documentation that stone products comply with specified minimum criteria when tested in accordance with testing standards specified in Part 2 of this Section.

1.4 PROJECT CONDITIONS

A. Environmental Requirements:

1. Minimum air temperature of 40 degrees F (4 degrees C) prior to, during, and for 48 hours after completion of work; and
2. Cold Weather Requirements: IMIAC (International Masonry Industry All-Weather Council) - Recommended Practices and Guide Specifications for Cold Weather Masonry Construction.

1.5 DELIVERY, STORAGE, AND HANDLING

A. Deliver, store, handle, and protect materials in accordance with Section 01600.

1. Store mortar materials on pallets in dry place.
2. Protect materials from rain, moisture, and freezing temperatures.
3. Protect reinforcement and accessories from elements.

1.6 WARRANTY

A. Special Warranty: Prepare and submit in accordance with Section 01780.

1. Provide 40-year warranty against manufacturing defects in manufactured stone products.

PART 2 PRODUCTS

2.1 MANUFACTURERS

A. Basis of Design Manufacturer: Coronado Stone Products.

B. Stone Product: Subject to compliance with requirements, provide the following product:

1. Sand Canyon Honed –16” x 30” as manufactured by Coronado Stone Products
   a. Stone Color: Custom Color to be specified by architect

c. Substitutions: Per Division 01

2.2 STONE MATERIALS

A. Simulated Stone:

1. Precast simulated stone, composed of following materials:
   a. Portland Cement: ASTM C 150, Type 1, 2, or 3 depending upon color to be produced.
   b. Course Aggregates: ASTM C 330, lightweight type, color as necessary to obtain final approved color of stone.
   c. Sand: ASTM C 144, special color if required to match approved sample.

CONFORMED

d. Iron oxide colors.
e. Water: Clean and free from deleterious substances.

2.3 RELATED MATERIALS

A. Setting Accessories:
1. Moisture Barrier:
   a. Refer to Section 07-25-00
2. Metal Lath:
   a. Refer to section 09-24-00
3. Joint Sealant: Refer to Section 07-92-00.
4. Cleaner: Nonacid cleaner as recommended by simulated stone manufacturer.

B. Graffiti Coating / Weather Seal
1. PROSOCO, Inc – Sure Clean Weather Seal Blok Guard & Graffiti Control II
   a. Product Description:
      Clear-drying, water-based silicone emulsion for weatherproofing concrete block and other porous masonry materials and protecting them from graffiti attacks without altering the natural appearance.

   b. Test Area
      Test a minimum 4 ft. by 4 ft. area on each type of masonry. Use the manufacturer's application instructions. Let protective treatment test area cure before inspection. Keep test panels available for comparison throughout the protective treatment project.

   c. Application

      Apply two (2) coats to all interior and exterior manufactured stone veneer.

      Before applying, read "Preparation" and "Safety Information" sections in the Manufacturer's Product Data Sheet. Do not dilute or alter. Apply "wet on wet" per manufacturers specifications.

      Spray
      1. Using low-pressure (<50 psi) spray equipment, saturate, "wet-on-wet" spraying from the bottom up. Avoid excessive overlapping. *For textured and porous surfaces*, apply enough material to create 6 to 8 inch rundown below the contact point.
      2. Let first application penetrate masonry surface for 2 to 3 minutes. *For textured and porous surfaces*, reapply in same saturating manner to ensure complete coverage of recessed surfaces.
      3. Immediately brush out runs and drips to prevent build up.

      Brush or Roller

      Saturate uniformly. Let product penetrate for 2-3 minutes. Re-saturate. Brush out heavy runs and drips that don't penetrate.

      Dense, Smooth Surface Application

      Apply enough in a single saturating application to completely wet the surface without creating drips, puddles or rundown. Brush out or back roll all runs and drips for uniform appearance. Do not over apply. Over application may cause unacceptable color change. One application is normally enough. Always test for application rate.

CONFORMED

Second Coat Application Instructions

Apply the second wet-on-wet coat as soon as the first application is dry to the touch or within one hour. Allowing more than one hour between coats could reduce the effectiveness of the second coat or cause darkening. Immediately back roll or brush out runs and drips for a uniform appearance and to prevent build up.

Drying Time:

Treated surfaces dry to the touch in 1 hour. Protect surfaces from rainfall for 6 hours following treatment. Blok-Guard® & Graffiti Control II treatments gain water repellency properties in 24 hours.

Graffiti Removal

Remove graffiti with PROSOCO Defacer Eraser Graffiti Wipe

Cleanup

Cleanup tools, equipment and over spray with soap and warm water. Cleanup is more difficult from surfaces hotter than 95 degrees F (35 degrees C).

Maintenance

Contractor to provide three (3) containers of PROSOCO Defacer Eraser Graffiti Wipe to owner

PART 3 EXECUTION

3.1 EXAMINATION AND PREPARATION

A. Examination: Examine conditions and proceed with work in accordance with Division 01 and Division 02
   1. Verify that field conditions are acceptable and are ready to receive work.
   2. Verify items provided by other Sections of work are properly sized and located.
   3. Verify that built-in items are in proper location and ready for roughing into masonry work.
   4. Verify correct product prior to installation.
   5. Consult Owner and manufacturer if deficiencies exist. Correct deficiencies in accordance with stone manufacturer's recommendations.

B. Protect surrounding area from possible damage during installation work.

C. Initiating installation constitutes Installer's acceptance of existing surfaces and substrate.

3.2 APPLICATION

A. Moisture Barrier:
   1. Apply sheets horizontally, starting at the base of the wall, and lapping each successive upper sheet over the previous lower sheet.
   2. Lap horizontal and vertical joints 6 inches.
   3. Cut and seal joints, penetrations, openings, and projections with manufacturer's recommended tape.

CONFORMED

4. Install with corrosion-resistant staples.

B. Lathing: Apply metal lath taut, with long dimension perpendicular to supports.
   1. Lap ends minimum 1 inch. Secure end laps with tie wire where they occur between supports.
   2. Lap sides of lath minimum 1-1/2 inches.
   3. Attach metal lath to framing using nails or screws of type, size, and spacing as recommended by system manufacturer.
   4. Continuously reinforce internal angles with corner mesh, except where the metal lath returns 3 inches from corner to form the angle reinforcement; fasten at perimeter edges only.
   5. Place 4 inch wide strips of metal lath centered over junctions of dissimilar backing materials. Secure rigidly in place.

C. Mortar:
   1. Apply 3/8 inch scratch coat of mortar to lath and allow to dry 48 hours.

D. Simulated Stone Veneer: Install in accordance with manufacturer's instructions.
   1. Sand Canyon Honed: Do not install stones vertically. Blend the stone on the wall from several different boxes to ensure proper color. Due to the large profile of the Sand Canyon Honed, Coronado recommends selecting an installer that has previous experience with precast or large tile installations.
   2. Apply 3/8 to 1/2 inch of mortar covering to back of each stone.
   3. Press units firmly into position, wiggle each piece slightly and apply light pressure to unit to ensure firm bonding, causing mortar to extrude slightly around edges of units and to leave a joint width of 3/8" .
   4. Place units with uniform mortar joints Full Smooth Tooled in accordance with manufacturer's instructions.
   5. Install outside corner return units with short and long lengths alternated.

E. Plan work to minimize jobsite cutting. Perform necessary cutting with proper tools to provide uniform edges; take care to prevent breaking unit corners or edges.

F. Remove excess mortar; do not allow mortar to dry on face of units.
   1. Point and tool joints before mortar has set.
   2. Clean and finish joints in accordance with architect's and manufacturer's instructions.

G. Control Joints: Size in accordance with Section 07920 for sealant performance, but in no case larger than adjacent mortar joints in exposed stone units.

H. Expansion Joints: Provide where indicated on Drawings or as recommended by system manufacturer.

I. Built-in Work: As work progresses, build in door and window frames, nailing strips, anchor bolts, plates, and other items specified in various sections.
   1. Build in items plumb and level.
   2. Bed anchors of metal door and glazed frames in mortar joints. Fill frame voids solid with mortar.
   3. Do not build in organic materials subject to deterioration.

3.3 ADJUSTING

A. Cutting and Fitting: Cut and fit for chases, pipes, conduit, sleeves, and grounds. Cooperate with other sections of work to provide correct size, shape, and location.
   1. Obtain approval prior to cutting or fitting any area not indicated or where appearance or strength of masonry work may be impaired.

3.4 CLEANING AND SEALING

CONFORMED

A. Cleaning: Comply with Division 01
   1. Remove excess mortar and smears using brush or steel wool.
   2. Replace defective mortar. Match adjacent work.
   3. Clean soiled surfaces with non-acidic solution, acceptable to the stone manufacturer, which will not harm masonry or adjacent materials.
   4. Leave surfaces thoroughly clean and free of mortar and other soiling.
   5. Use nonmetallic tools in cleaning operations.

END OF SECTION

CONFORMED

SECTION 05 12 00

STRUCTURAL STEEL FRAMING

PART 1 GENERAL

1.1 SUMMARY

A. Section Includes:
   1. Structural steel framing members.
   2. Grouting base plates.

B. Related Sections:
   1. Division 01: General Requirements

1.2 REFERENCES

A. American Institute of Steel Construction (AISC) - Specifications for Structural Steel Buildings.

B. American Welding Society (AWS) D1.1 - Structural Welding Code - Steel.

C. ASTM International (ASTM):
   1. A36/A36M - Standard Specification for Carbon Structural Steel.
   2. A53/A53M - Standard Specification for Pipe, Steel, Black and Hot-Dipped, Zinc-Coated, Welded and Seamless.
   3. A108 - Standard Specification for Steel Bars, Carbon, Cold-Finished, Standard Quality.
   4. A307 - Standard Specification for Low-Carbon Steel Externally and Internally Threaded Standard Fasteners.
   5. A325 - Standard Specification for High-Strength Bolts for Structural Steel Joints, Including Suitable Nuts and Plain Hardened Washers.
   6. A490 - Standard Specification for Quenched and Tempered Alloy Steel Bolts for Structural Steel Joints.
   7. A500 - Standard Specification for Cold-Formed Welded and Seamless Carbon Steel Structural Tubing in Rounds and Shapes.
   8. A501 - Standard Specification for Hot-Formed Welded and Seamless Carbon Steel Structural Tubing.
   9. A572/A572M - Standard Specification for High Strength Low Alloy Columbium-Vanadium Steels of Structural Quality.
   10. A992/A992M - Standard Specification for Steel for Structural Shapes.
   11. C109 - Standard Test Method for Compressive Strength of Hydraulic Cement Mortars (Using 2-In. or 50-mm Cube Specimens).
   12. E164 - Standard Practice for Ultrasonic Contact Examination of Weldments.

D. Society for Protective Coatings (SSPC) - Painting Manual.

1.3 SUBMITTALS

A. Submittals for Review:
   1. Shop Drawings: Indicate profiles, sizes, spacing, and location of structural members, openings, attachments, and fasteners, and connections not detailed.

B. Quality Control Submittals:
   1. Welder Qualifications: As required by AWS D1.1.

1.4 QUALITY ASSURANCE

A. Fabricator and Erector Qualifications: Minimum 10 years experience in work of this Section.

B. Welder Qualifications: AWS D1.1.

C. Design Requirements: Design connections not detailed on Drawings under supervision of a Professional Structural Engineer experienced in this work and registered in the State in which the project is located.

1.5 DELIVERY, STORAGE AND HANDLING

A. Store steel above ground on platforms, skids, or other supports; separate with wooden separators.

B. Protect steel from corrosion.

C. Prevent damage to prime coat.

PART 2 PRODUCTS

2.1 MATERIALS

A. Steel:
1. Shapes, bars, and plates: see drawings
2. Hollow structural sections: see drawings
3. Pipe: see drawings

2.2 ACCESSORIES

A. Anchor Bolts: ASTM A307.

B. High Strength Bolts: ASTM A325, Type 1, uncoated.

C. Standard Bolts: ASTM A307, Grade A.

D. Primer Paint: SSPC Paint 15, Type 1, red oxide.

E. Non Shrink Grout: Premixed, consisting of non-metallic aggregate, cement, water reducing and plasticizing agents; minimum 7,000 PSI compressive strength at 28 days.

F. Welding Materials: AWS D1.1, type required for materials being welded.

2.3 FABRICATION

A. Fabricate structural steel in accordance with AISC Manual.

B. Welding: AWS D1.1. Stress relieve welded assemblies by heat treatment.

C. Where collection of water inside structural tubing could occur, provide drain hole at lowest point.

D. Cap open ends of tubes and seal weld. Wherever practical, weld connections all around. Seal seams that cannot be practically welded with joint sealer.

E. Shop Painting:
1. Shop prime steel surfaces except:
   a. Surfaces to be welded.
   b. Contact surfaces of high strength friction type bolted connections.
   c. Surfaces to receive direct-applied fireproofing.
2. Surface preparation: SSPC Method SP2 - Hand Tool Cleaning or Method SP3 - Power Tool Cleaning.
3. Application: One coat; follow coating manufacturer's instructions.

4. Minimum dry film thickness: 2.0 mils.

PART 3 EXECUTION

3.1 ERECTION OF STEEL FRAMING

A. Erect structural steel in accordance with AISC Specifications.

B. Accurately assemble to lines and elevations indicated, within specified erection tolerances.

C. Align and adjust members forming parts of complete frame or structure after assembly but before fastening.

D. Provide temporary shoring and bracing members with connections of sufficient strength to resist imposed loads.

E. Align column bases with leveling plates.

F. Align bearing plates with wedges or shims.

G. Fasten splices of compression members after abutting surfaces have been brought completely into contact.

H. Clean bearing surfaces and surfaces that will be in permanent contact before members are assembled.

I. Locate splices only where indicated.

J. Do not correct fabrication by gas cutting on major members.

K. Remove temporary shoring and bracing members after permanent members are in place and final connections have been made.

L. Installation Tolerances:
1. Maximum variation from plumb: 1/8 inch per story, noncumulative.
2. Maximum variation from level: 1/8 inch in 10 feet, noncumulative.
3. Maximum offset from alignment of adjacent members: ¼ inch.

3.2 PLACEMENT OF GROUT

A. Remove loose and foreign matter from concrete; lightly roughen bonding surface.

B. Remove foreign materials from steel surfaces; align and level members in final position.

C. Just prior to grouting, thoroughly wet concrete surfaces; remove excess water.

D. Mix grout in accordance with manufacturer's instructions. Do not retemper.

E. Place grout continuously, by most practical means; avoid entrapped air. Do not vibrate grout.

F. Do not remove leveling shims for at least 48 hours after grouting. After removing shims, fill voids with sand-cement grout.

3.3 FIELD QUALITY CONTROL

A. Testing and Inspection Services:
1. Inspect steel elements for conformance to specified requirements including:
   a. Location and adequacy of bracing.
   b. Location and set of anchor bolts and other inserts.

c. Alignment, plumb, camber, and other required attributes.

2. Inspect high strength bolted construction in accordance with AISC Specification and as follows:
   a. Visually inspect high strength bolted connections.
   b. Check at least two bolts of every third connection with calibrated torque wrench for proper torque.
3. Inspect field welds in accordance with AWS D1.1 and as follows:
   a. Visually inspect welds.
   b. Test full penetration welds by ultrasonic method in accordance with ASTM E164.
4. Make one set of six test cubes for each 1/3 cubic yard of grout placed or fraction thereof:
   a. Mold and test cubes in accordance with ASTM C109; three at 7 days and three at 28 days.
   b. Restrain grout from expansion by use of top plate.

3.4 ADJUSTING

A. Touch up bolt heads, nuts, field welds, and abrasions in shop coating with same primer used in shop.

END OF SECTION

CONFORMED

SECTION 05 40 00

COLD-FORMED METAL FRAMING

PART 1 GENERAL

1.1 SUMMARY

A. Section Includes:
   1. Formed steel stud exterior wall framing.
   2. Formed steel joist framing.

B. Related Sections:
   1. Division 01: General Requirements

1.2 REFERENCES

A. American Iron and Steel Institute (AISI) - Specification for the Design of Cold-Formed Steel Structural Members.

B. American Society of Civil Engineers (ASCE) 7 - Minimum Design Loads for Buildings and Other Structures.

C. American Welding Society (AWS)D1.3 - Structural Welding Code - Sheet Steel.

D. ASTM International (ASTM):
   1. A1003/A1003M - Standard Specification for Steel Sheet, Carbon, Metallic- and Nonmetallic-Coated for Cold-Formed Framing Members.
   2. C955 - Standard Specification for Load-Bearing (Transverse and Axial) Steel Studs, Runners (Tracks), and Bracing or Bridging for Screw Application of Gypsum Board and Metal Plaster Bases.
   3. C1007 - Standard Specification for Installation of Load Bearing (Transverse and Axial) Steel Studs and Related Accessories.
   4. C1513 - Standard Specification for Steel Tapping Screws for Cold-Formed Steel Framing Connections.

E. Society for Protective Coatings (SSPC) - Painting Manual.

F. Steel Framing Alliance (SFA).

1.3 SUBMITTALS

A. Submittals for Review:
   1. Shop Drawings: Indicate framing layout, components, connections, fastenings, and pertinent details.
   2. Product Data: Indicate framing components, sizes, materials, finishes, and accessories.

B. Quality Control Submittals:
   1. Certificates of Compliance: Certificate from Professional Structural Engineer responsible for system design that system was designed in accordance with Contract Document requirements, applicable Building Code, and generally accepted engineering practices.

1.4 QUALITY ASSURANCE

A. Manufacturer and Installer Qualifications: Minimum 10 years experience in work of this Section.

B. Manufacturer: Current member of SFA.

C. Calculate structural properties of framing members in accordance with AISI Specifications.

D. Design framing under the direct supervision of a Professional Structural Engineer with minimum 2 years experience in the work of this Section and licensed in the State in which the Project is located.

E. Design exterior wall stud system to withstand:
1. Live and dead loads in accordance with Building Code.
2. Wind pressure loads in accordance with ASCE 7.
3. Movement caused by an ambient temperature range of 120] degrees F and a surface temperature range of 160 degrees F.
4. Maximum deflection under loading: L/360 without sheathing materials.

F. Design joist system to withstand:
1. Live and dead loads in accordance with Building Code.
2. Maximum deflection under loading: L/360 without decking materials.

G. Design system to accommodate construction tolerances, deflection of building structural members, and clearances at openings.

H. Welder Qualifications: AWS D1.3.

PART 2 PRODUCTS

2.1 MANUFACTURERS

A. Products by following manufacturers are acceptable:
1. California Expanded Metal Company. www.cemcosteel.com)
2. ClarkDietrich Building Systems. (www.clarkdietrich.com)
3. Craco Mfg., Inc. (www.cracometals.com)
4. Marino Ware Industries. (www.marinoware.com)

B. Substitutions: Under provisions of Division 01.

2.2 MATERIALS

A. Framing Materials:
1. ASTM A1003/A1003M, galvanized sheet steel, G60 coating class.
2. Fabricate components to ASTM C955.
3. Studs: Channel profile, punched for utility access.
4. Tracks:
   a. Channel profile, same gage and depth as studs, unpunched.
   b. Top track: Deflection compensating type, deep leg runner with slotted screw holes; permit plus or minus 1/2 inch movement of overhead structure without damage to framing.
   c. Top and Bottom track: 1-1/4 inch high legs.
5. Joists: Channel profile, unpunched.
6. Joist end closures: Channel profile, same gage and depth as joists, unpunched.

2.3 ACCESSORIES

A. Bracing, Furring, Bridging: Formed sheet steel, thickness determined by performance requirements specified.

B. Plates, Gussets, Clips: Formed sheet steel, thickness determined by performance requirements specified.

C. Fasteners: ASTM C1513; self-drilling, self-tapping screws.

D. Touch Up Paint: SSPC Paint 20, Type I or II.

E. Welding Materials: AWS D1.3; type required for materials being welded.

2.4 FABRICATION

A. Framing components may be prefabricated using templates.

PART 3 EXECUTION

3.1 INSTALLATION - GENERAL

A. Install framing components in accordance with ASTM C1007, manufacturer's instructions, and approved Shop Drawings.

B. Welding: In accordance with AWS D1.3.

C. Make provisions for erection stresses. Provide temporary alignment and bracing.

3.2 INSTALLATION - STUD FRAMING

A. Place top and bottom tracks in straight lines with ends butted. Fasten tracks per drawings.

B. Place studs at spacing indicated and not more than 2 inches from abutting walls and at each side of openings.

C. Install deflection compensating top track at framing extending to underside of structure.

D. Construct corners using minimum of three studs.

E. Double studs at wall openings, door jambs, and window jambs.

F. Do not splice studs.

G. Erect studs, brace, and reinforce to develop full strength, to achieve design requirements.

H. Install headers above openings and intermediate studs above and below openings to align with wall stud spacing.

I. Install framing between studs for attachment of mechanical and electrical items, and to prevent stud rotation.

J. Laterally brace walls at locations indicated.

3.3 INSTALLATION - JOISTS

A. Place joists at spacings indicated and not more than 2 inches from abutting walls. Connect members to supports using fastener method.

B. Set members parallel and level, with lateral bracing and bridging where indicated.

C. Locate joists directly over bearing studs or load distribution member.

D. Provide additional joists under parallel partitions when partition length exceeds one-half of joist span and around openings that interrupt one or more joists.

E. Do not splice joists.

F. Provide web stiffeners at reaction points and points of concentrated loads.

CONFORMED

G. Provide end blocking where joist ends are not otherwise restrained from rotation.

3.4 INSTALLATION TOLERANCES

A. Maximum Variation from True Position: 1/4 inch.

B. Maximum Variation of any Member from Plane: 1/4 inch.

3.5 ADJUSTING

A. Touch up field connections and breaks in factory coatings with touch up paint applied in accordance with manufacturer's instructions.

END OF SECTION

CONFORMED

SECTION 05515

ROOF ACCESS LADDERS

PART 1 GENERAL

1.1 SECTION INCLUDES

A. Aluminum access ladders.

1.2 RELATED SECTIONS

A. Division 01 – General Requirements

1.3 REFERENCES

A. AA – Aluminum Association.

B. ASTM B 209 - Standard Specification for Aluminum and Aluminum-Alloy Sheet and Plate.

C. ASTM B 221 - Standard Specification for Aluminum and Aluminum-Alloy Extruded Bars, Rods, Wire, Profiles, and Tubes.

D. OSHA 1910.27 – Fixed Ladders.

1.4 SUBMITTALS

A. Submit under provisions of Division 01

B. Product Data: Manufacturer's data sheets on each product.

C. Shop Drawings:

1. Detail fabrication and erection of each ladder indicated. Include plans, elevations, sections, and details of metal fabrications and their connections.

2. Provide templates for anchors and bolts specified for installation under other Sections.

3. Provide reaction loads for each hanger and bracket.

D. Qualification Data:

1. Refer to Quality Assurance provisions for submittal requirements evidencing experience, certifications and resources.

E. Selection Samples: For each finish specified, two complete sets of color chips representing manufacturer's full range of available colors.

F. Verification Samples: For each finish specified, two samples, minimum size 6 inches (150 mm) square, represent actual product color.

1.5 QUALITY ASSURANCE

A. Manufacturer Qualifications: A firm experienced in producing aluminum metal ladders similar to those indicated for this Project.

1. Record of successful in-service performance.

2. Sufficient production capacity to produce required units.

3. Professional engineering competent in design and structural analysis to fabricate ladders in compliance with industry standards and local codes.

B. Installer Qualifications: Competent and experienced firm capable of selecting fasteners and installing ladders to attain designed operational and structural performance.

C. Product Qualification: Product design shall comply with OSHA 1910.27 minimum standards for ladders.

D. Mock-Up: Provide a mock-up for evaluation of surface preparation techniques and application workmanship.

1. Install ladder in area designated by Architect.

2. Do not proceed with remaining work until workmanship and installation are approved by Architect.

3. Rework mock-up as required to produce acceptable work.

1.6 DELIVERY, STORAGE, AND HANDLING

A. Store products in manufacturer's unopened packaging until ready for installation.

1.7 PROJECT CONDITIONS

A. Field Measurements: Verify dimensions by field measurement before fabrication.

1. Established Dimensions: Where field measurements cannot be made without delaying the Work, indicate established dimensions on shop drawing submittal and proceed with fabrication.

1.8 WARRANTY

A. A. Manufacturer has responsibility for an extended Corrective Period for work of this Section for a period of 5 years commencing on the shipment date of the product against all the conditions indicated below, and when notified in writing from Owner, manufacturer shall promptly and without inconvenience and cost to Owner correct said deficiencies.

1. Defects in materials and workmanship.

2. Deterioration of material and surface performance below minimum OSHA standards as certified by independent third party testing laboratory. Ordinary wear and tear, unusual abuse or neglect excepted.

3. Within the warranty period, the manufacturer shall, at its option, repair, replace, or refund the purchase price of defective ladder.

B. Manufacturer shall be notified immediately of defective products, and be given a reasonable opportunity to inspect the goods prior to return. Manufacturer will not assume responsibility, or compensation, for unauthorized repairs or labor. Manufacturer makes no other warranty, expressed or implied, to the merchantability, fitness for a particular purpose, design, sale, installation, or use, of the ladder; and shall not be liable for incidental or consequential damages, losses of or expenses, resulting from the use of ladder products.

1.9 EXTRA MATERIALS

A. Furnish touchup kit for each type and color of paint finish provided.

PART 2 PRODUCTS

2.1 MANUFACTURERS

A. Basis of Design Manufacturer: O'Keeffe's, Inc.; 100 N Hill Drive, Suite 12, Brisbane, CA 94005. Toll Free Tel: (888) 653-3333. Tel: (415) 824-4900. Fax: (415) 824-5900. Email: info@okeeffes.com. Web: http://www.okeeffes.com.

B. Substitutions: Per Division 01 General Conditions

2.2 APPLICATIONS/SCOPE

A. Fixed Access Ladder:

1. Standard Duty Channel Rail w/ safety post

a. Model 500 as manufactured by O'Keeffe's Inc.

2. Tubular Rail Low Parapet Access Ladder with Roofover Rail Extension.

a. Model 502 as manufactured by O'Keeffe's Inc.

2.3 FINISHES

A. Clear Anodic Finish: AA-M10C22A41 Mechanical finish as fabricated. Architectural Class I,

clear coating 0.018 mm or thicker.

2.4 MATERIALS

A. Aluminum Sheet: Alloy 5005-H34 to comply with ASTM B209.

B. Aluminum Extrusions: Alloy 6063-T6 to comply with ASTM B221.

2.5 FABRICATION

A. Rungs: Not less than 1-1/4 inches (32 mm) in section and 18–3/8 inches (467mm) long, formed from tubular aluminum extrusions. Squared and deeply serrated on all sides.

1. Rungs shall withstand a 1,500 pound (454 kg) load without deformation or failure.

B. Channel Side Rails: Not less than 1/8 inch (3 mm) wall thickness by 3 inches (76 mm) wide.

C. Heavy Duty Tubular Side Rails: Assembled from two interlocking aluminum extrusions no less than 1/8 inch (3 mm) wall thickness by 3 inches (76 mm) wide. Construction shall be self-locking stainless steel fasteners, full penetration TIG welds and clean, smooth and burr-free surfaces.

D. Walk-Through Rail and Roof Rail Extension: Not less than 3 feet 6 inches (1067 mm) above the landing and shall be fitted with deeply serrated, square, tubular grab rails.

E. Ladder Safety Post: Retractable hand hold and tie off.

F. Rail and Harness Fall Arrest System: Supplied where specified as alternate to safety cage and landing platforms, in accordance with OSHA regulation 1910.27; permanently mounted to ladder rungs and complete with necessary components.

PART 3 EXECUTION

3.1 EXAMINATION

A. Coordinate anchorages. Furnish setting drawings, templates, and anchorage structural loads for fastener resistance.

B. Do not begin installation until supporting structure is complete and ladder installation will not interfere with supporting structure work.

C. If supporting structure is the responsibility of another installer, notify Architect of unsatisfactory supporting work before proceeding.

3.2 INSTALLATION

A. Install in accordance with manufacturer's instructions and in proper relationship with adjacent construction.

CONFORMED

3.3 PROTECTION

A. Protect installed products until completion of project.

B. Touch-up, repair or replace damaged products before Substantial Completion.

END OF SECTION

CONFORMED

SECTION 06 10 00

ROUGH CARPENTRY

PART 1 GENERAL

1.1 SUMMARY

A. Section Includes:
   1. Wood blocking and furring.
   2. Telephone and electrical panel backboards.
   3. Roof curbs.

B. Related Sections:
   1. Division 01: General Requirements

1.2 REFERENCES

A. American Wood Protection Association (AWPA) U1 - Use Category System - User Specification for Treated Wood.

B. ASTM International (ASTM):
   1. A153/A153M - Standard Specification for Zinc Coating (Hot-Dip) on Iron and Steel Hardware.
   2. E84 - Standard Test Method for Surface Burning Characteristics of Building Materials.
   3. F593 - Standard Specification for Stainless Steel Bolts, Hex Cap Screws and Studs.

C. Engineered Wood Association (APA) PRP-108 - Performance Standards and Qualification Policy for Structural-Use Panels.

D. Forest Stewardship Council (FSC) STD-40-004 - Chain of Custody Standard.

E. National Institute of Standards and Technology (NIST) - Product Standard PS 20 - American Softwood Lumber Standard.

F. Northeastern Lumber Manufacturers Association (NELMA) - Standard Grading Rules for Northeastern Lumber.

G. National Lumber Grades Authority (NLGA) - Standard Grading Rules for Canadian Lumber.

H. Redwood Inspection Service (RIS) - Standard Specifications for Grades of California Redwood Lumber.

I. Southern Pine Inspection Bureau (SPIB) - Standard Grading Rules for Southern Pine Lumber.

J. West Coast Lumber Inspection Bureau (WCLIB) - Standard Grading Rules for West Coast Lumber.

K. Western Wood Products Association (WWPA) G-5 - Western Lumber Grading Rules.

1.3 QUALITY ASSURANCE

A. Lumber Grading Agency: Certified to NIST PS 20.

B. Identify lumber and sheet products by official grade mark.

C. Fire Retardant Treated Products: Bear label of recognized independent testing laboratory indicating flame spread rating of 25 or less, tested to ASTM E84.

1.4 DELIVERY, STORAGE AND HANDLING

A. Store materials minimum 6 inches above ground on framework or blocking and cover with protective waterproof covering providing for adequate air circulation.

B. Do not store seasoned or treated materials in damp location.

C. Protect edges and corners of sheet materials from damage.

PART 2 PRODUCTS

2.1 MANUFACTURERS

A. Acceptable Manufacturers - Wood Treatments:
1. Viance LLC.

B. Substitutions: Not permitted.

2.2 MATERIALS

A. Lumber:
1. Grading rules: CBC SECTION 2303.1
2. Species: DF.
3. Grade: Structural I.
4. Surfacing: Surfaced four sides (S4S) unless otherwise indicated.
5. Maximum moisture content: 19 percent.

B. Sheet Products:
1. Type: APA Plywood
2. Panel grade: APA Rated Sheathing.

2.3 ACCESSORIES

A. Fasteners:
1. Type and size: As required by conditions of use.
2. Exterior locations and treated products: Stainless steel, ASTM F593, Type 304 or 316.
3. Other interior locations: Plain steel.

2.4 FABRICATION

A. Preservative Treatment:
1. Treat [lumber] [and] [sheet products] in accordance with AWPA U1:
   a. Interior locations protected from moisture sources: Category UC1 - Interior/Dry.
   b. Interior locations subject to sources of moisture: Category UC2 - Interior/Damp.
   c. Exterior locations above ground: Category UC3A - Above Ground/Protected.
   d. Exterior locations in contact with ground: Category UC4A - Ground Contact/General Use.
2. Treatment process: Type CCA - Chromated Copper Arsenate.

B. Fire Retardant Treatment; treat lumber and sheet products in accordance with AWPA U1:
1. Interior locations: Category UCFA - Fire Retardant/Interior.
2. Exterior locations: Category UCFB - Fire Retardant/Exterior.

PART 3 EXECUTION

3.1 INSTALLATION

A. Provide blocking, nailers, grounds, furring, and other similar items required to receive and support work.

B. Set members level, plumb, and rigid.

C. Curb roof openings except where prefabricated curbs are provided. Form corners by alternating lapping side members.

D. Install telephone and electrical panel backboards where indicated. Oversize panel by 12 inches on all sides.

END OF SECTION

CONFORMED

SECTION 06 11 00

FRAMING AND SHEATHING

PART 1 GENERAL

1.1 SUMMARY

A. Section Includes:
1. Roof and wall framing.
2. Floor decking.
3. Roof and wall sheathing.
4. Wood blocking and furring.
5. Telephone and electrical panel backboards.
6. Roof curbs.
7. Preservative and fire retardant treatment of wood.

B. Related Sections:
1. Division 01: General Requirements

1.2 REFERENCES

A. American Wood Protection Association (AWPA) U1 - Use Category System - User Specification for Treated Wood.

B. ASTM International (ASTM):
1. A153/A153M - Standard Specification for Zinc Coating (Hot-Dip) on Iron and Steel Hardware.
2. A653/A653M - Standard Specification for Steel Sheet, Zinc-Coated (Galvanized) or Zinc-Iron Alloy Coated (Galvannealed) by the Hot-Dip Process.
3. E84 - Standard Test Method for Surface Burning Characteristics of Building Materials.
4. F593 - Standard Specification for Stainless Steel Bolts, Hex Cap Screws and Studs.
5. F1554 - Standard Specification for Anchor Bolts, Steel, 36, 55 and 105 KSI Yield Strength.

C. Engineered Wood Association (APA) PRP-108 - Performance Standards and Qualification Policy for Structural-Use Panels.

D. Forest Stewardship Council (FSC) STD-40-004 - Chain of Custody Standard.

E. National Institute of Standards and Technology (NIST) - Product Standard PS 20 - American Softwood Lumber Standard.

F. Northeastern Lumber Manufacturers Association (NELMA) - Standard Grading Rules for Northeastern Lumber.

G. National Lumber Grades Authority (NLGA) - Standard Grading Rules for Canadian Lumber.

H. Redwood Inspection Service (RIS) - Standard Specifications for Grades of California Redwood Lumber.

I. Southern Pine Inspection Bureau (SPIB) - Standard Grading Rules for Southern Pine Lumber.

J. West Coast Lumber Inspection Bureau (WCLIB) - Standard Grading Rules for West Coast Lumber.

K. Western Red Cedar Lumber Association (WRCLA) - Grading Rules.

L. Western Wood Products Association (WWPA) G-5 - Western Lumber Grading Rules.

1.3 QUALITY ASSURANCE

A. Lumber Grading Agency: Certified to NIST PS 20.

B. Identify lumber and sheet products by official grade mark.

C. Fire Retardant Treated Products: Bear label of recognized independent testing laboratory indicating flame spread rating of 25 or less, tested to ASTM E84.

1.4 DELIVERY, STORAGE AND HANDLING

A. Store materials minimum 6 inches above ground on framework or blocking and cover with protective waterproof covering providing for adequate air circulation.

B. Do not store seasoned or treated materials in damp location.

C. Protect edges and corners of sheet materials from damage.

1.5 WARRANTIES

A. Provide manufacturer's 10 year warranty against rot and termite damage for composite wood.

PART 2 PRODUCTS

2.1 MANUFACTURERS

A. Acceptable Manufacturers - Laminated Veneer Lumber:
1. Boise Cascade Corporation.
2. Georgia-Pacific Corporation.
3. LP Corp.

B. Acceptable Manufacturers - Prefabricated Wood I Joists:
1. Weyerhauser.

C. Acceptable Manufacturers - Composite Wood:
1. CertainTeed Corp.
2. Trex Co.

D. Acceptable Manufacturers - Wood Treatments:
1. Viance LLC.

E. Substitutions: Not permitted.

2.2 MATERIALS

A. Dimension Lumber:
1. Grading rules: CBC SECTION 2303.1
2. Species: DF.
3. Grade: Structural I.
4. Surfacing: Surfaced four sides (S4S) unless otherwise indicated.
5. Maximum moisture content: 19 percent.

B. Laminated Veneer Lumber:
1. Fabricated by laminating wood veneers under pressure using exterior type adhesive with grain of veneers parallel with length.
2. Veneer: Douglas Fir or Southern Pine.

C. Prefabricated Wood I Joists:

1. Fabricated by bonding stress graded lumber flanges to webs with exterior type adhesive.
2. Flange material: As standard with joist manufacturer.
3. Web material: As standard with joist manufacturer.

D. Composite Joists and Headers:
1. Fabricated by laminating wood veneers to narrow oriented strand board to produce rectangular members with veneers making up not less than 32 percent of total cross section.

E. Composite Wood:
1. Extruded product consisting of polyethylene and wood fibers with integral coloring.
2. Color: to be selected from manufacturer's full color range.

F. Sheet Products:
1. Type: APA Plywood.
2. Panel grade:
   a. Wall] and roof sheathing: APA Structural I Rated Sheathing.
   b. Combination subfloor/underlayment: APA Sturd-I-Floor.
   c. Underlayment: APA Underlayment.
3. Exposure:
   a. Exterior applications: Exterior.
   b. Interior applications: Interior.

2.3 ACCESSORIES

A. Anchor Bolts: ASTM F1554.

B. Fasteners:
1. Type and size: As required by conditions of use.
2. Exterior locations and treated products: Stainless steel, ASTM F593, Type 304 or 316.
3. Other interior locations: Plain steel.

C. Metal Connectors and Joist Hangers:]
1. Galvanized steel, ASTM A653/A653M.
2. Size and shape: To suit framing conditions.

D. Subflooring Adhesive:
1. Waterproof, water based, air cure type, in cartridge dispensers.

E. Sill Gasket: 1/4 inch thick, plate width, closed cell polyethylene or urethane foam from continuous rolls.

F. Termite Shield: Galvanized sheet steel, minimum 26 gage.

2.4 FABRICATION

A. Preservative Treatment:
1. Treat lumber and sheet products in accordance with AWPA U1:
   a. Interior locations protected from moisture sources: Category UC1 - Interior/Dry.
   b. Interior locations subject to sources of moisture: Category UC2 - Interior/Damp.
   c. Exterior locations above ground: Category UC3A - Above Ground/Protected.
   d. Exterior locations in contact with ground: Category UC4A - Ground Contact/General Use.
2. Treatment process: Type CCA - Chromated Copper Arsenate.

B. Fire Retardant Treatment; treat lumber and sheet products in accordance with AWPA U1:
1. Interior locations: Category UCFA - Fire Retardant/Interior.
2. Exterior locations: Category UCFB - Fire Retardant/Exterior.

PART 3 EXECUTION

CONFORMED

3.1 INSTALLATION

A. Set members level, plumb, and rigid.

B. Make provisions for erection loads, and for temporary bracing to maintain structure safe, plumb, and in true alignment until completion of erection and installation of permanent bracing.

C. Place beams, joists, and rafters with crown edge up.

D. Construct load bearing framing members full length without splices.

E. Sills:
1. Place full width continuous sill flashings under framed walls on cementitious foundations. Lap flashing joint 4 inches.
2. Place sill gasket directly on cementitious foundation. Fit tight to protruding foundation anchor bolts.
3. Anchor sills to foundation with expansion fasteners or power driven fasteners.

F. Joist Framing:
1. Provide minimum 1-1/2 inches of bearing.
2. Lap members framing from opposite sides minimum 4 inches.
3. Construct double joist headers at floor and ceiling openings and under wall stud partitions that are parallel to floor joists. Frame rigidly into joists.
4. Bridge joists at mid span for spans in excess of 8 feet.

G. Stud Framing:
1. Provide single bottom plate and double top plates for load bearing partitions.
2. Provide single bottom and top plates for non load bearing partitions.
3. Anchor bottom plates to concrete structure with expansion fasteners or power driven fasteners.
4. Triple studs at corners and partition intersections.
5. Anchor studs abutting masonry or concrete with toggle or expansion bolts.
6. Frame openings with double studs and headers. Space short studs over and under opening to stud spacing.
7. At corners, provide diagonal 1 x 4 inch bracing; notch studs to fit.

H. Rafter Framing:
1. Notch to fit exterior wall plates.
2. Double rafters at roof openings; support with metal hangers.
3. At ridge, place rafters directly opposite each other and secure to ridge member.
4. At hips and valleys, bevel ends for bearing against hip or valley rafter.
5. Locate collar ties at every third pair of rafters, one third of the distance to ceiling joists; cut ends to fit slope and secure to rafters.

I. Beams:
1. Provide minimum end bearing of 4 inches.
2. Nail built-up members with two rows of nails spaced 6 inches on center maximum.

J. Lumber Decking:
1. Place decking to span two or more supports, with ends occurring over supports.
2. Stagger end joints in adjacent rows.
3. Secure to each support with 2 fasteners.

K. Roof Sheathing:
1. Place panels perpendicular to framing members with ends staggered and sheet ends over firm bearing.
2. If tongue-and-groove panels are not used, Install sheathing clips between adjacent sheets between roof framing members.
3. Leave 1/8 inch expansion space at panel ends and edges.

4. Secure to supports with nails spaced maximum 6 inches on center along edges and maximum 12 inches on center in field of panels.

L. Wall Sheathing:
1. Place panels parallel to framing members, with ends over firm bearing and staggered.
2. At corners, place sheathing for a horizontal distance of 48 inches.
3. Leave 1/8 inch expansion space at panel ends and edges.
4. Secure to supports with nails spaced maximum 6 inches on center along edges and maximum 12 inches on center in field of panels.

M. Floor Decking:
1. Place panels perpendicular to framing members, with ends over firm bearing and staggered.
2. Leave 1/8 inch expansion space at panel ends and edges.
3. Secure to supports with nails spaced maximum 6 inches on center along edges and in field of panels.

N. Provide blocking, nailers, grounds, furring, and other similar items required to receive and support work.

O. Curb roof openings except where prefabricated curbs are provided. Form corners by alternating lapping side members.

P. Install telephone and electrical panel backboards where indicated: Oversize panel by 12 inches on all sides.

3.2 TOLERANCES

A. Framing Members: 1/4 inch from true position, maximum.

B. Surface Flatness of Floor: 1/4 inch in 10 feet maximum.

END OF SECTION

CONFORMED

SECTION 06 17 33

WOOD I-JOISTS

PART 1 GENERAL

1.1 SUMMARY

A. Section Includes:
   1. Wood chord and plywood web joists for roof framing.
   2. Bridging and bracing.
   3. Framing for openings.

B. Related Sections:
   1. Division 01: General Requirements
   2. Section 06 1100 - Framing and Sheathing.

1.2 REFERENCES

A. ASTM International (ASTM) A653/A653M - Standard Specification for Steel Sheet, Zinc-Coated (Galvanized) or Zinc-Iron Alloy-Coated (Galvannealed) by the Hot-Dip Process.

B. Engineered Wood Association (APA) PRP-108 - Performance Standards and Qualification Policy for Structural-Use Panels.

C. Forest Stewardship Council (FSC) STD-40-004 - Chain of Custody Standard.

D. National Institute of Standards and Technology (NIST) - Product Standard PS 20 - American Softwood Lumber Standard.

1.3 SUBMITTALS

A. Submittals for Review:
   1. Shop Drawings: Indicate framing system, sizes and spacing of joists, loads, bearing and anchorage details, bridging and bracing, and framed openings.

1.4 QUALITY ASSURANCE

A. Fabricator Qualifications: Minimum 10 years experience in work of this Section.

B. Identify lumber and panel products by official grade mark.

C. Design Requirements: Design joists under supervision of Professional Structural Engineer with experience in work of this Section, licensed in State in which Project is located.

1.5 DELIVERY, STORAGE AND HANDLING

A. Transport and store joists in upright position resting on bearing ends.

B. Protect from moisture, warpage, and distortion.

PART 2 PRODUCTS

2.1 MANUFACTURERS

A. Design Basis: Contract Documents are based on products by Weyerhauser Company.

A. Equivalent products by following manufacturers are acceptable:
   1. Weyerhauser Company.

B. Substitutions: Not permitted.

2.2 MATERIALS

A. Lumber:
   1. Graded in accordance with NIST PS 20.

B. Plywood:
   1. APA PRP-108, grade as dictated by design, Exterior Exposure.

2.3 ACCESSORIES

A. Fasteners: Galvanized steel, type suited to conditions.

B. Joist Bridging: Type and size required by joist manufacturer.

2.4 FABRICATION

A. Cut members accurately to length to achieve tight fit.

B. Provide single top and bottom chords.

C. Jig joists during fabrication to obtain tight joint connections.

PART 3 EXECUTION

3.1 INSTALLATION

A. Install joists in accordance with manufacturer's instructions.

B. Place level and true to line.

C. Provide temporary bracing to hold joists in position until permanently secured.

D. Prior to inducing loads, place permanent bridging, bracing, and anchors to maintain joists straight and in correct position.

E. Do not field cut joists.

F. Place headers and supports to frame openings as specified in Section 06 1100.

G. Installation Tolerances: Maximum 1/2 inch variation from true position.

END OF SECTION

CONFORMED

SECTION 06 18 00

GLUED-LAMINATED CONSTRUCTION

PART 1 GENERAL

1.1 SUMMARY

A. Section Includes:
   1. Glued-laminated wood beams.
   2. Steel hardware and attachment devices.
   3. Preservative treatment of wood.

B. Related Sections:
   1. Division 01: General Requirments

1.2 REFERENCES

A. American Institute of Timber Construction (AITC):
   1. 117 - Standard Specifications for Structural Glued Laminated Timber of Softwood Species, Design and Manufacturing Requirements.
   2. A190.1 - American National Standard, Structural Glued Laminated Timber.

B. American Wood Protection Association (AWPA) U1 - Use Category System - User Specification for Treated Wood.

C. ASTM International (ASTM):
   1. A36/A36M - Standard Specification for Carbon Structural Steel.
   2. A123/A123M - Standard Specification for Zinc (Hot-Galvanized) Coatings on Products Fabricated From Rolled, Pressed, and Forged Steel Shapes, Plates, Bars and Strips.
   3. A325 - Standard Specification for High Strength Joints for Structural Steel Joints.
   4. D2559 - Standard Specification for Adhesives for Structural Laminated Wood Products for Use Under Exterior (Wet Use) Exposure Conditions.
   5. E84 - Standard Test Method for Surface Burning Characteristics of Materials.

D. Engineered Wood Association (APA) - Certification procedures.

E. Forest Stewardship Council (FSC) STD-40-004 - Chain of Custody Standard.

F. National Institute of Standards and Technology (NIST) - Product Standard PS 20 - American Softwood Lumber Standard.

1.3 SUBMITTALS

A. Submittals for Review:
   1. Shop Drawings: Indicate framing systems, sizes and spacing of members, bearing and anchorage details, bracing, and framed openings.
   2. Product Data: Manufacturer's data including load tables.
   3. Samples: 6 inch long samples of laminated decking showing cross section and finish.

1.4 QUALITY ASSURANCE

A. Fabricator Qualifications:
   1. Minimum 10 years experience in work of this Section and certified by AITC or APA in accordance with ANSI A190.1.
   2. Design and laminate members to AITC 117.

B. Design members under direct supervision of Professional Structural Engineer with experience in work of this Section, licensed in State in which project is located.

1.5 DELIVERY, STORAGE AND HANDLING

A. Deliver beams individually wrapped.

PART 2 PRODUCTS

2.1 MANUFACTURERS

A. Equivalent products by following manufacturers are acceptable:
   1. Boise Cascade Corporation.
   2. Sentinel Structures, Inc.
   3. Southern Components, Inc.

B. Substitutions: Not permitted.

2.2 MATERIALS

A. Lumber:
   1. Species: Manufactored.
   2. Graded in accordance with NIST PS 20 with following values:
      a. Bending: 2400 PSI.
      b. Tension parallel to grain: 1755 psi.
      c. Compression parallel to grain: 2500 psi.
      d. Modulus of elasticity: 1800 psi.

2.3 ACCESSORIES

A. Adhesives: ASTM D2559.

B. Steel Connectors and Brackets: ASTM A36/A36M, hot dip galvanized to ASTM A123/A123M.

C. Bolts: ASTM A325 galvanized steel.

D. Deck Fasteners: Hot-dip galvanized or fluoropolymer coated steel, size and type to suit conditions of use.

E. Sealer: Surface type, waterborne, clear, containing water repellent, fungicide, and insecticide.

2.4 FABRICATION

A. Fabricate in accordance with ANSI A190.1.

B. Cut and fit to length.

C. Fabricate beams with camber built in.

D. Fabricate decking with tongue and groove edges.

E. Do not splice or join members in locations other than those indicated on Drawings.

F. Use adhesives rated for wet conditions of service.

G. Surface Finish: Smooth.

H. After trimming, apply sealer in accordance with AITC requirements.

I. Fabricate steel hardware and connections with joints fitted, welded, and ground smooth.

J. Preservative Treatment:
1. Treat wood in accordance with AWPA U1:
   a. Interior locations protected from moisture sources: Category UC1 - Interior/Dry.
   b. Interior locations subject to sources of moisture: Category UC2 - Interior/Damp.
   c. Exterior locations above ground: Category UC3A - Above Ground/Protected.
   d. Exterior locations in contact with ground: Category UC4A - Ground Contact/General Use.
2. Treatment process: Type CCA - Chromated Copper Arsenate.

PART 3 EXECUTION

3.1 ERECTION

A. Erect members in accordance with approved Shop Drawings.

B. Beams
1. Set members level and plumb, in correct position.
2. Provide temporary bracing to hold members in place until permanently secured.
3. Fit members together accurately without trimming, cutting, or unauthorized modifications.
4. Anchor securely in place.

C. Decking:
1. Place perpendicular to framing members, with ends staggered and over firm bearing.
2. Fully engage tongue and groove edges.
3. Fasten securely to supporting framework and adjacent deck units.

D. Preservative Treated Products: Treat field cuts and holes with concentrated solution of same preservative as originally applied.

E. Installation Tolerances:
1. Beams:
   a. Maximum variation from true position: Plus or minus 1/2 inch.
   b. Maximum variation from plumb: Plus or minus 1/4 inch in 10 feet, noncumulative.
   c. Maximum variation from level or from indicated slopes: Plus or minus 1/4 inch in 10 feet, noncumulative.
2. Decking:
   a. Maximum variation in surface flatness: 1/8 inch in 10 feet measured in any direction.

END OF SECTION

CONFORMED

SECTION 06 41 00

ARCHITECTURAL WOOD CASEWORK

PART 1 - GENERAL

1.01 SUMMARY

A. Section Includes:
   1. Plastic Laminate Casework
   2. Hardware typically furnished by the casework manufacturer.
   3. Shelving.
   4. Structural supports incorporated into wood casework.

B. Related Sections:
   1. Division 01: General Requirements
   2. Section 07 92 00 - Joint Sealers.

1.02 SUBMITTALS

A. Shop Drawings:
   1. Submit shop drawings in conformance with the requirements of *Architectural Woodwork Standards*.
   2. Include dimensioned plan, sections, elevations, and details, including interface with adjacent work
   3. See Division 01: General Conditions for additional submittal requirements

B. Samples:
   1. Submit a sample in the specified finish of each hardware item that will be visible at exposed surfaces when the job is complete.
   2. Submit plastic laminate samples.

1.03 QUALITY ASSURANCE

A. Work shall be in accordance with the Grade or Grades specified of the *Architectural Woodwork Standards*.

B. Qualification:
   1. Firm (woodwork manufacturer) with no less than 5 years of production experience similar to a specific project, whose qualifications indicate the ability to comply with the requirements of this Section.
   2. The woodwork manufacturer must have at least one project in the past 5 years where the value of the woodwork was within 20 percent of the cost of woodwork for this Project.

C. Single Source Responsibility: A single manufacturer shall provide and install the work of described in this Section.

D. Pre-Installation Conference:
   1. Convene 2 weeks prior to beginning work of this Section.
   2. Attendance: Architect, Owner, Contractor, installer, and related trades.
   3. Review, discuss and resolve:
      a. Critical dimensions.
      b. Product delivery and storage.
      c. Staging and sequencing.
      d. Protection of completed work.

1.04 DELIVERY STORAGE AND HANDLING

A. Deliver materials only when the project is ready for installation and the general contractor has provided a clean storage area.
   1. Delivery of architectural millwork shall be made only when the area of operation is enclosed, all plaster and concrete work is dry and the area broom clean.
   2. Maintain indoor temperature and humidity within the range recommended by the *Architectural Woodwork Standards* for the location of the project.

1.05 SCHEDULING

A. Coordinate fabrication, delivery, and installation with the general contractor and other applicable trades.

PART 2 - PRODUCTS

2.01 COMPONENTS

A. Lumber: In accordance with the *Architectural Woodwork Standards* Grade specified for the product being fabricated. Moisture Content: 6% to 12% for boards up to 2 inch (50.8 mm) nominal thickness, and shall not exceed 19% for thicker pieces.
B. Core: MDF meeting the requirements of *Architectural Woodwork Standards*.
   1. Made with no added Urea Formaldehyde.
   2. Water resistant core, where required: Particle board meeting the requirements of ANSI A208.1 Grade M3 MR-50 or MDF meeting the requirements of ANSI A 208.2 Grade 155 MR-50.
C. Veneer core plywood: A non-telegraphing hardwood manufactured with exterior glue.
D. Plastic Laminate: Meeting the requirements of the *Architectural Woodwork Standards* for its use.

   1. Acceptable Manufacturers - Plastic Laminate:
   2. Design Basis: Contract Documents are based on products by Lamin-Art
   3. Equivalent products by following manufacturers are acceptable:
      a. Formica Corp.
      b. Nevamar Co.
      c. Wilsonart International, Inc.
   4. Color:
      a. Cabinets, Doors, Drawer Faces: Lamin-Art - #3061-VT “Italian Cheery” Velva-Tex finish
      b. Countertops: Lamin-Art – Provide selection from manufacturer’s standard range.
   5. Substitutions: Not permitted

Substitutions: Not permitted.

F. Edgeband: PVC, matching the color and pattern of the exposed laminate.
G. Adhesives: Type I, fully waterproof casework with sinks, Type II, water resistant at other locations.
H. Hardware:
   1. Finish: satin stainless steel
   2. Pulls: 4” wire type
   3. Drawer Guides: Full extension
      a. Meeting the requirements of the AWS for the type and size of drawer.
      b. File Drawers: Full extension. Minimum 100 pound capacity except 150 pound capacity for lateral files.
   4. Hinges: Concealed European style Grade II hinges minimum 120º opening
   5. Door Catches:
   6. Shelf Supports: Bored hole system with metal supports.

7. Locks
    a. Door locks:
    b. Drawer locks:
    c. Keying: Keyed alike or as specified by owner
        1. Provide 3 keys per lock.
        2. Provide 2 master keys.
8. Elbow Catches

2.02 FABRICATION

A. Grade: AWS CustomGrade.
B. Exposed Exterior Surfaces: High Pressure Decorative Laminate. Color and pattern as selected by the architect.
C. Exposed interior surfaces: High pressure laminate matching exposed surfaces.
D. Semi-exposed surfaces: Low-pressure melamine overlay
E. Cabinet construction type: Frameless.
F. Door Interface Style: Flush overlay
G. Edgeband: PVC, matching the color and pattern of the exposed laminate.
    1. Edgeband at doors, drawer fronts, and false fronts: 3mm PVC
H. Drawers:
    1. Sides: Particle board with melamine surfacing.
    2. Bottoms: MDF with melamine faces. Bottoms shall be fully housed into drawer sides, backs, and sub-fronts, and securely glued.
    3. Joinery: Nailed and glued lock joints.

PART 3 - EXECUTION

3.01 EXAMINATION

A. Verify the adequacy and proper location of any required backing or support framing.
B. Verify that mechanical, electrical, plumbing, and other building components affecting work in this Section are in place and ready.

3.02 INSTALLATION

A. Prior to installation, condition cabinets to average humidity that will prevail after installation.
B. Install all work in conformance with the *Architectural Woodwork Standards*, latest edition.
    1. Installation shall conform to the *AWS* Grade of the items being installed.
C. All work shall be secured in place, square, plumb, and level.
D. All work abutting other building components shall be properly scribed.
E. Mechanical fasteners used at exposed and semi-exposed surfaces, excluding installation attachment screws and those securing cabinets end to end, shall be countersunk.
F. Equipment cutouts shown on plans shall be cut by the installer.
G. Adhere countertops, splashes, and skirts with beads of adhesive.
H. Fill joints between cabinets, tops, splashes, and adjacent construction with joint sealer as specified in Section 07 9200; finish flush

3.03 ADJUSTING & TOUCH UP

A. Before completion of the installation, the installer shall adjust all moving and operating parts to function smoothly and correctly.

CONFORMED

B. All nicks, chips, and scratches in the finish shall be filled and retouched. Damaged items that cannot be repaired shall be replaced.

3.04 CLEANUP

A. Upon completion of installation, the installer shall clean all installed items of pencil and ink marks and broom clean the area of operation, depositing debris in containers provided by the general contractor.

END OF SECTION

CONFORMED

SECTION 07 21 15

BATT INSULATION

PART 1 GENERAL

1.1 SUMMARY

A. Section Includes:
   1. Batt insulation in wall, ceiling and roof assemblies.

B. Related Sections:
   1. Division 01: General Requirements
   2. Section 05-40-00 – Cold-Formed Metal Framing
   3. Section 06-11-00 – Framing and Sheathing

1.2 REFERENCES

A. ASTM International (ASTM):
   1. C665 - Standard Specification for Mineral Fiber Blanket Thermal Insulation for Wood Frame and Light Construction Buildings.
   2. E84 - Standard Test Method for Surface Burning Characteristics of Building Materials.
   3. E136 - Standard Test Method for Behavior of Materials in a Vertical Tube Furnace at 750 Degrees C.

B. 2013 California Building Code, Section 720

1.3 SUBMITTALS

A. Quality Control Submittals:
   1. Certificates of Compliance: Certification from an independent testing laboratory that insulation meets fire hazard classification requirements.

1.4 QUALITY ASSURANCE

A. Fire Hazard Classification:
   1. Noncombustible, tested to ASTM E136.
   2. Flame spread/smoke developed rating for exposed insulation of 25/450 or less per 2013 CBC 720.3, tested to ASTM E84.

1.5 DELIVERY, STORAGE AND HANDLING

A. Store insulation in clean, dry, sheltered area, off ground or floor, until used. Protect against wetting and moisture absorption.

1.6 PROJECT CONDITIONS

A. Do not install insulation until building is substantially water and weather tight.

PART 2 PRODUCTS

2.1 MANUFACTURERS

A. Acceptable Manufacturers:
   1. Johns Manville.
   2. Certainteed
   3. Owens Corning.

B. Substitutions: Not permitted.

2.2 MATERIALS

A. Thermal Batt Insulation:
   1. Type: ASTM C665, glass fiber composition.
   2. Facing: Reinforced Kraft paper vapor barrier on one side with stapling flanges.
   3. Thermal resistance:
      a. 3-1/2 inches thick: R-value of 11.00.
      b. 3-5/8 inches thick: R-value of 13.00.
      c. 6-1/4 inches thick: R-value of 19.00.
      d. 10 inches thick: R-value of 30.00.
      e. 12 inches thick: R-value of 38.00.

2.3 ACCESSORIES

A. Tape: Minimum 2 inches wide, polyester self-adhering type, mesh reinforced.

B. Fasteners: Hot-dip galvanized steel staples or type best suited to application, minimum 5/8 inch penetration into framing.

C. Impale Fasteners: Steel impaling fasteners on metal base with lock washers, length to suit insulation thickness.

D. Wire Mesh: Hexagonal steel wire, galvanized.

PART 3 EXECUTION

3.1 INSTALLATION

A. Staple or nail in place at maximum 12 inches on center.

B. Butt insulation to adjacent construction. Butt ends and edges.

C. Carry insulation around pipes, wiring, boxes, and other components.

D. Ensure complete enclosure of spaces without voids.

E. Apply with vapor barrier facing towards interior of structure.

F. Tape seal lapped flanges, butt ends, and tears and holes in facings.

G. At metal stud walls, the insulation shall be wired in place with two #9 wire, one within 12 inches of the top and one at the mid-point of each stud bay.

END OF SECTION

CONFORMED

SECTION 07 22 00

ROOF DECK INSULATION

PART 1 – GENERAL

1.1 RELATED DOCUMENTS

A. Drawings and general provisions of the Contract, including the Conditions of the Contract and Division 01 Specification Sections apply to this section.

1.2 SUMMARY

A. Section includes roof insulation over the properly prepared deck substrate.

B. Related Sections:
1. Section 07 05 00 – Common Work Procedures for Thermal and Moisture Protection.
2. Section 07 52 00 Modified Bituminous Membrane Roofing
3. Section 07 62 00 – Sheet Metal Flashing and Trim.

1.3 REFERENCES

A. American Society for Testing and materials (ASTM):
1. ASTM A167 Standard Specification for Stainless and Heat-Resisting Chromium Nickel Steel Plate, Sheet and Strip.
2. ASTM A653 Standard Specification for Steel Sheet, Zinc-Coated (Galvanized) or Zinc-Iron Alloy-Coated (Galvanized) by the Hot-Dip Process.
3. ASTM B29 Standard Specification for Refined Lead.
4. ASTM B32 Standard Specification for Solder Metal.
5. ASTM C165 Standard Test Method for Measuring Compressive Properties of Thermal Insulation.
6. ASTM C208 Standard Specification for Cellulosic Fiber Insulation Board.
7. ASTM C209 Standard Test Method for Cellulosic Fiber Insulating Board.
8. ASTM C272 Standard Test Method for Water Absorption of Core Materials for Structural Sandwich Constructions.
9. ASTM C1396 Standard Specification for Gypsum Wallboard.
10. ASTM C518 Standard Test Method for Steady-State Heat Flux Measurements and Thermal Transmission Properties by Means of the Heat Flow Meter Apparatus.
11. ASTM C578 Standard Specification for Perlite Thermal Insulation Board.
12. ASTM C728 Standard Test Methods for Fire Test of Roof Coverings.
13. ASTM C1289 Standard Specification for Faced Rigid Polyisocyanurate Thermal Insulation.
14. ASTM D5 Standard Test Method for Penetration of Bituminous Materials.
15. ASTM D36 Standard Test Method for Softening Point of Bitumen (Ring and Ball Apparatus).
16. ASTM D312 Standard Specification for Asphalt Used in Roofing.
17. ASTM D412 Standard Test Methods for Vulcanized Rubber and Thermoplastic Rubbers and Thermoplastic Elastomers-Tension.
18. ASTM D1621 Standard Test Method for Compressive Properties of Rigid Cellular Plastics.

19. ASTM D1622 Standard Test Method for Apparent Density of Rigid Cellular Plastics.
20. ASTM D1863 Standard Specification for Mineral Aggregate Used on Built-Up Roofs.
21. ASTM D2126 Standard Test Method for Response off Rigid Cellular Plastics to Thermal Humid Aging.
22. ASTM D2178 Standard Specification for Asphalt Glass Felts used in Roofing and Waterproofing.
23. ASTM D4601 Standard Specification for Asphalt-Coated Glass Fiber Base Sheet Used in Roofing.
24. ASTM D5147 Standard Sampling and Testing Modified Bituminous Sheet Material.

B. Cast Iron Soil Pipe Institute, Washington, D.C. (CISPI)

C. Factory Mutual Research (FM):
1. Roof Assembly Classifications.

D. National Roofing Contractors Association (NRCA):
1. Roofing and Waterproofing Manual.

E. Underwriters Laboratories, Inc. (UL):
1. Fire Hazard Classifications.

F. Warnock Hersey (WH):
1. Fire Hazard Classifications.

G. Sheet Metal and Air Conditioning Contractors National Association (SMACNA)

H. Steel Deck Institute, St. Louis, Missouri (SDI)

I. Southern Pine Inspection Bureau, Pensacola, Florida (SPIB)

J. Insulation Board, Polyisocyanurate (FS HH-I-1972)

K. Insulation Board, Thermal (Fiberboard) (FS LLL-1-535B)

1.4 SUBMITTALS

A. Product Data: Provide manufacturer’s specification data sheets for each product in accordance with Division 01 Section Submittal Procedures. 01300.

B. Provide approval letters from insulation manufacturer for use of their insulation within this particular roofing system type.

C. Provide a sample of each insulation type.

D. Shop Drawings
1. Submit manufacturer’s shop drawings indicating complete installation details of tapered insulation system, including identification of each insulation block, sequence of installation, layout, drain locations, roof slopes, thicknesses, crickets and saddles.

2. Shop drawing shall include: Outline of roof, location of drains, complete board layout of tapered insulation components, thickness and the average “R” value for the completed insulation system.

E. Certification
1. Submit roof manufacturer’s certification that insulation fasteners furnished are acceptable to roof manufacturer.
2. Submit roof manufacturer’s certification that insulation furnished is acceptable to roofing manufacturer as a component of roofing system and is eligible for roof manufacturer’s system warranty.

1.5 QUALITY ASSURANCE

A. Fire Classification, ASTM E-108.

B. Manufacturer’s Certificate: Certify that roof system furnished is approved by Factory Mutual, Underwriters Laboratories, Warnock Hersey or approved third party testing facility in accordance with ASTM E108, Class A for external fire and meets local or nationally recognized building codes.

C. Manufacturer’s Certificate: Certify that the roof system is adhered properly to meet or exceed the requirements of FM 1-90.

D. Pre-installation meeting: Refer to Division 07 roofing specifications for pre-installation meeting requirements.

1.6 DELIVERY, STORAGE AND HANDLING

A. Deliver products to site with seals and labels intact, in manufacturer’s original containers, dry and undamaged.

B. Store all insulation materials in a manner to protect them from the wind, sun and moisture damage prior to and during installation. Any insulation that has been exposed to any moisture shall be removed from the project site.

C. Keep materials enclosed in a watertight, ventilated enclosure (i.e. tarpaulins).

D. Store materials off the ground. Any warped, broken or wet insulation boards shall be removed from the site.

PART 2 – PRODUCTS

2.1 PRODUCTS, GENERAL

A. Refer to Division 01 Section “Common Product Requirements.”

B. Basis of Design: Materials, manufacturer’s product designations, and/or manufacturer’s names specified herein shall be regarded as the minimum standard of quality required for work of this Section. Comply with all manufacturer and contractor/fabricator quality and performance criteria specified in Part 1.

C. Substitutions: Products proposed as equal to the products specified in this Section shall be submitted in accordance with Bidding Requirements and Division 01 provisions.

1. Proposals shall be accompanied by a copy of the manufacturer's standard specification section. That specification section shall be signed and sealed by a professional engineer licensed in the state in which the installation is to take place. Substitution requests containing specifications without licensed engineer certification shall be rejected for non-conformance.
2. Include a list of three (3) projects of similar type and extent, located within a one hundred mile radius from the location of the project. In addition, the three projects must be at least five (5) years old and be available for inspection by the Architect, Owner or Owner's Representative.
3. Equivalency of performance criteria, warranty terms, submittal procedures, and contractual terms will constitute the basis of acceptance.
4. The Owner's decision regarding substitutions will be considered final. Unauthorized substitutions will be rejected.

2.2 INSULATION MATERIALS

A. Thermal Insulation Properties and Approved Insulation Boards.
   1. Tapered Polyisocyanurate Roof Insulation; ASTM C1289:
      a. Qualities: Factory Tapered, closed cell polyisocyanurate foam core bonded to heavy duty glass fiber mat facers.
      b. Thickness: Minimum ½"
      c. Average R-Value: Minimum R-30
      d. Tapered Slope: ½" per foot
      e. Compliances: UL, WH or FM listed under Roofing Systems Federal Specification HH-I-1972, Class 1
      f. Acceptable Products:
         1) E'NRG'Y-2; Johns Manville
         2) H Shield, Hunter
         3) GAFTEMP Isotherm R; GAF
         4) Approved Equivalent
   2. High Density Fiberboard Roof insulation; ASTM C208
      a. Qualities: Rigid, composed of interlocking fibers factory blended treated with asphalt on all six sides. "Six Side Primed"
      b. Board Size: Four feet by four feet (4' x 4')
      c. Thickness: Minimum ½"
      d. Compliances: UL, WH, FM listed under Roofing Systems. Federal Specification LLL-I-535-B.
      e. Acceptable Manufacturers:
         1) Celotex
         2) Temple Inland
         3) GAF Building Materials Corporation
         4) Approved Equivalent

2.3 RELATED MATERIALS

A. Fiber Cant and Tapered Edge Strips: Performed rigid insulation units of sizes/shapes indicated, matching insulation board or of perlite or organic fiberboard, as per the approved manufacturer.
   1. Acceptable Manufacturers:
      a. Celotex
      b. Johns Manville
      c. GAF
      d. Approved Equivalent

B. Protection Board: Pre-molded semi-rigid asphalt composition board one half (1/2) inch.

C. Roof Board Joint Tape: Six (6) inches wide glass fiber mat with adhesive compatible with insulation board facers.

D. Asphalt: ASTM D312, Type III Steep Asphalt.

E. Roof Deck Insulation Adhesive: Insul-Lock HR - Dual-component, high rise foam adhesive as recommended by insulation manufacturer and approved by FM indicated ratings.
1. Tensile Strength (ASTM D412)……250 psi
2. Density (ASTM D1875)……..8.5 lbs./gal.
3. Viscosity (ASTM D2556)…….22,000 to 60,000 cP.
4. 2 `Peel Strength (ASTM D903)…..17 lb/in.
5. 3 `Flexibility (ASTM D816)……Pass @ -70°F

F. Fasteners: Corrosion resistant screw fastener as recommended by roof membrane manufacturer.
1. Factory Mutual Tested and Approved with three (3) inches coated disc for I-90 rating, length required to penetrate metal deck one inch.

PART 3 – EXECUTION

3.1 EXECUTION, GENERAL

A. Comply with requirements of Division 01 Section “Common Execution Requirements.”

3.2 INSPECTOR OF SURFACES

A. Roofing contractor shall be responsible for preparing an adequate substrate to receive insulation.
1. Verify that work which penetrates roof deck has been completed.
2. Verify that wood nailers are properly and securely installed.
3. Examine surfaces for defects, rough spots, ridges, depressions, foreign material, moisture, and unevenness.
4. Do not proceed until defects are corrected.
5. Do not apply insulation until substrate is sufficiently dry.
6. Broom clean substrate immediately prior to application.
7. Use additional insulation to fill depressions and low spots that would otherwise cause ponding water.
8. Verify that temporary roof has been completed.

3.3 INSTALLATION

A. Attachment with Mechanical Fasteners (Polyiso Board)
1. Approved insulation board shall be fully attached to the deck with an approved mechanical fastening system. As a minimum, the amount of fasteners shall be in accordance with manufacturer’s recommendation for FM I-90 system. Otherwise, a minimum of one fastener per two square feet shall be installed. See specification 07 52 00 for further details.
2. Filler pieces of insulation require at least two fasteners per piece if size of insulation is less than four square feet.

3. Spacing pattern of fasteners shall be as per manufacturer's recommendations to meet the FM requirements. Placement of any fastener from edge of insulation board shall be a minimum of three inches, and a maximum of six (6) inches.
4. Minimum penetration into deck shall be as recommended by the fastener manufacturer. There is a one (1) inch minimum for metal, wood and structural concrete decks where not specified by the manufacturer. For gypsum and cement-wood fiber decks, penetration shall be determined from pull-out test results with a minimum penetration of one and one-half (1 ½) inches.

B. Attachment with Insulation Adhesive. (Woodfiber Board)
1. Ensure all surfaces are clean, dry, free of dirt, debris, oils, loose ore embedded gravel, un-adhered coatings, deteriorated membrane and other contaminants that may inhibit adhesion.
2. Apply insulation adhesive directly to the substrate using a ribbon pattern with one quarter to one half (1/4-1/2) inch wide beads 12 inches o.c., using either the manual applicator or an automatic applicator, at a rate of one (1) gallon per one hundred (150) square feet per cartridge.
3. Immediately place insulation boards into wet adhesive. Do not slide boards into place. Do not allow the adhesive to skin over before installing insulation boards.
4. Briefly step each board into place to ensure contact with the adhesive. Substrates with irregular surfaces may prevent the insulation board from making positive contact with the adhesive. Relief cuts or temporary weights may be required to ensure proper contact.
5. All boards shall be cut and fitted where the roof deck intersects a vertical surface. The boards shall be cut to fit a minimum of one quarter (1/4) inch away from the vertical surface.
6. Tape joints of insulation as per manufacturer's requirements.

3.4 CLEANING

A. Remove debris and cartons from roof deck. Leave insulation clean and dry, ready to receive roofing membrane.

3.5 CONSTRUCTION WASTE MANAGEMENT

A. Remove and properly dispose of waste products generated during installation. Comply with requirements of authorities having jurisdiction.

END OF SECTION

CONFORMED

SECTION 07 25 00

WEATHER BARRIERS

PART 1 - GENERAL

1.1 SECTION INCLUDES

A. Weather barrier membrane

B. Seam Tape

C. Flashing

D. Fasteners

1.2 REFERENCES

A. ASTM International

1. ASTM C 920; Standard Specification for Elastomeric Joint Sealants
2. ASTM C 1193; Standard Guide for Use of Joint Sealants
3. ASTM D 882; Test Method for Tensile Properties of Thin Plastic Sheeting
4. ASTM D 1117; Standard Guide for Evaluating Non-woven Fabrics
5. ASTM E 84; Test Method for Surface Burning Characteristics of Building Materials
6. ASTM E 96; Test Method for Water Vapor Transmission of Materials
7. ASTM E 1677; Specification for Air Retarder Material or System for Framed Building Walls
8. ASTM E2178; Test Method for Air Permeance of Building Materials
9. ASTM E2357; Standard Test Method for Determining Air Leakage of Air Barrier Assemblies

B. AATCC – American Association of Textile Chemists & Colorists

1. Test Method 127 Water Resistance: Hydrostatic Pressure Test

C. TAPPI

1. Test Method T-410; Grams of Paper and Paperboard (Weight per Unit Area)
2. Test Method T-460; Air Resistance of Paper (Gurley Hill Method)

1.3 SUBMITTALS

A. Refer to Division 01 – General Requirements

B. Product Data: Submit manufacturer current technical literature for each component.

C. Samples: Weather Barrier Membrane, minimum 8-1/2 inches by 11 inch.

D. Quality Assurance Submittals

1. Design Data, Test Reports: Provide manufacturer test reports indicating product compliance with indicated requirements.
2. Manufacturer Instructions: Provide manufacturer's written installation instructions.
3. Manufacturer's Field Service Reports: Provide site reports from authorized field service representative, indicating observation of weather barrier assembly installation.

E. Closeout Submittals

1. Refer to Division 01 – General Conditions

(Weather Barrier Warranty: Manufacturer's executed warranty form with authorized signatures and endorsements indicating date of Substantial Completion.

1.4 QUALITY ASSURANCE

A. Qualifications

1. Installer shall have experience with installation of DuPont ™ Tyvek® weather barrier assemblies under similar conditions.
2. Installation shall be in accordance with weather barrier manufacturer's installation guidelines and recommendations.
3. Source Limitations: Provide weather barrier and accessory materials produced by single manufacturer.

B. Mock-up

1. Install mock-up using approved weather barrier assembly including fasteners, flashing, tape and related accessories per manufacturer's current printed instructions and recommendations.

   a. Mock-up size: 10 feet by 10 feet
   b. Mock-up Substrate: Match wall assembly construction, including window opening.
   c. Mock-up may remain as part of the work.

2. Contact manufacturer's designated representative prior to weather barrier assembly installation, to perform required mock-up visual inspection and analysis as required for warranty.

C. Pre-installation Meeting

1. Refer to Division 01 – General Conditions

2. Hold a pre-installation conference, two weeks prior to start of weather barrier installation. Attendees shall include Contractor, Architect, installer, Owner's Representative, and weather barrier manufacturer's designated representative.
3. Review all related project requirements and submittals, status of substrate work and preparation, areas of potential conflict and interface, availability of weather barrier assembly materials and components, installer's training requirements, equipment, facilities and scaffolding, and coordinate methods, procedures and sequencing requirements for full and proper installation, integration and protection.

1.5 DELIVERY, STORAGE AND HANDLING

A. Refer to Division 01 – General Conditions

B. Deliver weather barrier materials and components in manufacturer's original, unopened, undamaged containers with identification labels intact.

C. Store weather barrier materials as recommended by weather barrier manufacturer.

1.6 SCHEDULING

A. Review requirements for sequencing of installation of weather barrier assembly with installation of windows, doors, louvers and flashings to provide a weather-tight barrier assembly.

B. Schedule installation of weather barrier materials and exterior cladding within nine months of weather barrier assembly installation.

1.7 WARRANTY

A. Refer to Division 01 – General Conditions

B. Special Warranty

1. Weather barrier manufacturer's warranty for weather barrier for a period of ten (10) years from date of purchase.
2. Pre-installation meetings and jobsite observations by weather barrier manufacturer for warranty is required prior to assembly installation.

PART 2 - PRODUCTS

2.1 MANUFACTURERS

A. Design Basis: Contract Documents are based on products by: DuPont; 4417 Lancaster Pike, Chestnut Run Plaza 728, Wilmington, DE 19805; 1-800-44-TYVEK (8-9835); http://www.construction.tyvek.com

B. Substitutions: Under provisions of Division 01

2.2 MATERIALS

A. Basis of Design: spunbonded polyolefin, non-woven, non-perforated, weather barrier is based upon DuPont™ Tyvek® CommercialWrap® D and related assembly components.

B. Performance Characteristics:

1. Air Penetration: 0.001 cfm/ft^2 at 75 Pa when tested in accordance with ASTME2178. Type 1 when tested in accordance with ASTM E 1677. ≤0.04 cfm/ft @ 75 Pa when tested in accoradance with ASTM E2357.
2. Water Vapor Transmission: 30 perms, when tested in accordance with ASTM E 96, Method B.
3. Water Penetration Resistance: 235 cm when tested in accordance with AATCC Test Method 127.
4. Basis Weight: 2.4 oz/yd^2, when tested in accordance with TAPPI Test Method T-410.
5. Air Infiltration Resistance: Air infiltration at >750 seconds, when tested in accordance with TAPPI Test Method T-460.
6. Tensile Strength: 33/41 lbs/in., when tested in accordance with ASTM D 822 , Method A.
7. Surface Burning Characteristics: Class A, when tested in accordance with ASTM E 84 . Flame Spread: 15, Smoke Developed: 25.

2.3 ACCESSORIES

A. Seam Tape: 3" DuPont™ Tyvek® Tape as distributed by DuPont.

B. Fasteners:

1. Steel Frame Construction - DuPont™ Tyvek® Wrap Cap Screws,: 1-5/8 inch rust resistant screw with 2-inch diameter plastic cap fasteners.
2. Wood Frame Construction - DuPont™ Tyvek® Wrap Caps: 1-inch minimum plastic cap staple with leg length sufficient to achieve a minimum penetration of 5/8-inch into the wood stud.

C. Sealants

1. Refer to Section 07 92 00 Joint Sealants

D. Adhesives:

1. Provide adhesive recommended by weather barrier manufacturer.
2. Products:
   a. SIA 655
   b. Adhesives recommend by the weather barrier manufacturer.

E. Primers:

1. Provide flashing manufacturer recommended primer to assist in adhesion between substrate and flashing.

2. Products:
   a. SIA 655
   b. Permagrip 105
   c. Primers recommended by the flashing manufacturer

F. Flashing

1. DuPont™ FlexWrap™: Flexible membrane flashing materials for window openings and penetrations.

2. DuPont™ FlexWrap™ NF: Flexible membrane flashing materials for window openings and penetrations.

3. DuPont™ StraightFlash™: Straight flashing membrane materials for flashing windows and doors and sealing penetrations.

4. DuPont™ StraightFlash™ VF: Dual-sided flashing membrane materials for non-flanged windows and doors.

5. DuPont™ Thru-Wall Surface Adhered Membrane with Integrated Drip Edge: Thru-Wall flashing membrane materials for flashing at changes in direction or elevation (shelf angles, foundations, etc.) and at transitions between different assembly materials.

6. Preformed Inside and Outside Corners and End Dams as distributed by DuPont: Preformed three-dimensional shapes to complete the flashing system used in conjunction with DuPont™ Thru-Wall Flashing.

PART 3 - EXECUTION

3.1 EXAMINATION

A. Verify substrate and surface conditions are in accordance with weather barrier manufacturer recommended tolerances prior to installation of weather barrier and accessories.

3.2 INSTALLATION - WEATHER BARRIER

A. Install weather barrier over exterior face of exterior wall substrate in accordance with manufacturer recommendations

B. Install weather barrier prior to installation of windows and doors.

C. Start weather barrier installation at a building corner, leaving 6-12 inches of weather barrier extended beyond corner to overlap.

D. Install weather barrier in a horizontal manner starting at the lower portion of the wall surface with subsequent layers installed in a shingling manner to overlap lower layers. Maintain weather barrier plumb and level

E. Sill Plate Interface: Extend lower edge of weather barrier over sill plate interface 3-6 inches. Secure to foundation with elastomeric sealant as recommended by weather barrier manufacturer.

F. Window and Door Openings: Extend weather barrier completely over openings.

G. Overlap weather barrier

1. Exterior corners: minimum 12 inches.
2. Seams: minimum 6 inches.

H. Weather Barrier Attachment:

1. Steel or Wood Frame Construction - Attach weather barrier to studs through exterior sheathing. Secure using weather barrier manufacturer recommend fasteners, space 6 -18 inches vertically on center along stud line, and 24 inch on center, maximum horizontally.

I. Apply 4 inch by 7 inch piece of DuPont™ StraightFlash™ or weather barrier manufacturer approved alternate to weather barrier membrane prior to the installation cladding anchors.

3.3 SEAMING

A. Seal seams of weather barrier with seam tape at all vertical and horizontal overlapping seams.

B. Seal any tears or cuts as recommended by weather barrier manufacturer.

3.4 OPENING PREPARATION

A. Flush cut weather barrier at edge of sheathing around full perimeter of opening.

B. Cut a head flap at 45-degree angle in the weather barrier at window head to expose 8 inches of sheathing. Temporarily secure weather barrier flap away from sheathing with tape.

3.5 FLASHING

A. Cut 9-inch wide DuPont™ FlexWrap™ or DuPont™ FlexWrap™ NF a minimum of 12 inches longer than width of sill rough opening.

B. Cover horizontal sill by aligning DuPont™ FlexWrap™ or DuPont™ FlexWrap™ NF edge with inside edge of sill. Adhere to rough opening across sill and up jambs a minimum of 6 inches. Secure flashing tightly into corners by working in along the sill before adhering up the jambs.

C. Fan DuPont™ FlexWrap™ at bottom corners onto face of wall. Firmly press in place. Mechanically fasten fanned edges. Mechanically fastening DuPont™ FlexWrap™ NF is not required.

D. Apply 9-inch wide strips of DuPont™ StraightFlash™ at jambs. Align flashing with interior edge of jamb framing. Start StraightFlash™ at head of opening and lap sill flashing down to the sill.

E. Spray-apply primer to top 6 inches of jambs and exposed sheathing.

F. Install DuPont™ FlexWrap™ or DuPont™ FlexWrap™ NF at opening head using same installation procedures used at sill. Overlap jamb flashing a minimum of 2 inches.

G. Coordinate flashing with window installation.

H. On exterior, install backer-rod in joint between window frame and flashed rough framing. Apply sealant at jambs and head, leaving sill unsealed. Apply sealants in accordance with sealant manufacturer's instructions and ASTM C 1193.

I. Position weather barrier head flap across head flashing. Adhere using 4-inch wide DuPont™ StraightFlash™ over the 45-degree seams.

J. Tape top of window in accordance with manufacturer recommendations.

K. On interior, install backer rod in joint between frame of window and flashed rough framing. Apply sealant around entire window to create air seal. Apply sealant in accordance with sealant manufacturer's instructions and ASTM C 1193.

3.6 THRU-WALL FLASHING INSTALLATION

A. Apply primer per manufacturer's written instructions.

B. Install preformed corners and end dams bedded in sealant in appropriate locations along wall.

C. Starting at a corner, remove release sheet and apply membrane to primed surfaces in lengths of 8 to 10 feet.

D. Extend membrane through wall and leave ¼ inch minimum exposed to form drip edge.

E. Roll flashing into place. Ensure continuous and direct contact with substrate.

F. Lap ends and overlap preformed corners 4 inches minimum. Seal all laps with sealant.

G. Trim exterior edge of membrane 1-inch and secure metal drip edge per manufacturer's written instructions.

H. Terminate membrane on vertical wall. Terminate into reglet, counterflashing or with termination bar.

I. Apply sealant bead at each termination.

3.7 THRU-WALL FLASHING / WEATHER BARRIER INTERFACE AT BASE OF WALL

A. Overlap thru-wall flashing with weather barrier by 6-inches.

B. Mechanically fasten bottom of weather barrier through top of thru-wall flashing.

C. Seal vertical and horizontal seams with tape or sealing membrane.

3.8 THRU-WALL FLASHING / WEATHER BARRIER INTERFACE AT WINDOW HEAD

A. Cut flap in weather barrier at window head.

B. Prime exposed sheathing.

C. Install lintel as required. Verify end dams extend 4 inches minimum beyond opening.

D. Install end dams bedded in sealant.

E. Adhere 2 inches minimum thru-wall flashing to wall sheathing. Overlap lintel with thru-wall flashing and extend ¼ inch minimum beyond outside edge of lintel to form drip edge.

F. Apply sealant along thru-wall flashing edges.

G. Fold weather barrier flap back into place and tape bottom edge to thru-wall flashing.

H. Tape diagonal cuts of weather barrier.

I. Secure weather barrier flap with fasteners.

3.9 FIELD QUALITY CONTROL

A. Notify manufacturer's designated representative to obtain periodic observations of weather barrier assembly installation.

3.10 PROTECTION

A. Protect installed weather barrier from damage.

END OF SECTION

CONFORMED

SECTION 07 26 00

VAPOR RETARDERS

PART 1 GENERAL

1.1 SUMMARY

A. Section Includes:
   1. Sheet materials for controlling vapor diffusion at floors.

B. Related Sections:
   1. Division 01: General Conditions
   2. Section 03-3000 – Cast in Place Concrete

1.2 REFERENCES

A. ASTM International (ASTM):
   1. D882 - Standard Test Method for Tensile Properties of Thin Plastic Sheeting.
   2. D1709 - Standard Test Method for Impact Resistance of Plastic Film by the Free-Falling Dart Method.
   3. E96/E96M - Standard Test Method for Water Vapor Transmission of Materials.
   4. E154 - Standard Test Method for Water Vapor Retarders Used in Contact with Earth Under Concrete Slabs, on Walls, or as Ground Cover.
   5. E1643 - Standard Practice for Selection, Design, Installation, and Inspection of Water Vapor Retarders Used in Contact with Earth or Granular Fill Under Concrete Slabs.
   6. E1745 - Standard Test Method for Water Vapor Retarders Used in Contact with Soil or Granular Fill Under Concrete Slabs.

1.3 SUBMITTALS

A. Submittals for Review:
   1. Product Data: Include product description and performance characteristics.
   2. Samples: 12 x 12inch vapor retarder samples.

PART 2 PRODUCTS

2.1 MANUFACTURERS

A. Acceptable Manufacturers:
   1. Griffolyn, Division of Reef Industries. (www.reefindustries.com)
   2. Raven Industries. (www.rufco.com)
   3. Stego Industries. (www.stegoindustries.com)
   4. W.R. Meadows, Inc. (www.wrmeadows.com)

B. Substitutions: No substitutions

2.2 MATERIALS

A. Vapor Retarder: ASTM E1745, Class A minimum 15mil thickpolyethylene film.

2.3 ACCESSORIES

A. Adhesive:
   1. Compatible with vapor retarder and substrate, permanently non hardening.

B. Joint Tape: Minimum 2 inches wide, pressure sensitive, waterproof, compatible with vapor retarder.

PART 3 EXECUTION

3.1 INSTALLATION - UNDER SLABS ON GRADE

A. Install in accordance with [manufacturer’s instructions] and ASTM E1643.

B. Remove sharp rocks and objects that could puncture vapor retarder.

C. Install vapor retarder without tears, voids, and holes.

D. Lap ends and edges minimum 6inches over adjacent sheets.

E. Tape seal lapped joints, tears, holes, perimeter, and penetrations through vapor retarder.

3.2 REPAIR

A. Inspect vapor retarder for damage just prior to covering.

B. Clean damaged areas and cover with additional vapor retarder material cut minimum 6 inches larger than damaged area on all sides. Seal to main vapor retarder with continuous tape.

END OF SECTION

CONFORMED

SECTION 07 41 00

MANUFACTURED METAL ROOFING PANELS

PART 1 GENERAL

1.1 RELATED DOCUMENTS

A. Drawings and general provisions of the Contract, including the Conditions of the Contract and Division 01 Specification Sections apply to this section.

1.2 SUMMARY

A. Work described in this section includes pre-formed metal roofing system, soffit panel system, and gutter system with debris screen where shown on drawings complete with clips, perimeter and penetration flashing, and closures.

B. The roofing system must be certified by the roofing system manufacturer as “Solar Ready”. Roofing manufacturer shall provide the attachment point design for the proposed solar array to the roofing system specified herein. This design shall be certified by a licensed Structural Engineer in the State of California.

C. Related Work Specified Elsewhere:

1. Division 06 Section - Rough Carpentry
2. Division 07 Section - Roof Insulation
3. Division 07 Section - Sheet Metal Flashing and Trim

1.3 REFERENCES

A. American Architectural Manufacturer Association (AAMA):

1. AAMA 501.1 Standard Test Method for Metal Curtain Walls for Water Penetration using Dynamic Pressure.

B. American Iron and Steel Institute (AISI):

1. 1996 Edition Specification for the Design of Cold-Formed Steel Structural Members.

C. American Society of Civil Engineers (ASCE):

1. ASCE 7-05 Minimum Design Loads for Buildings and Other Structures.

D. American Society for Testing and Materials (ASTM):

1. ASTM A792 Standard Specification for Steel Sheet, 55% Aluminum-Zinc Alloy-Coated by the Hot-Dip Process.
2. ASTM A875 Standard Specification for Steel Sheet, Zinc-5% Aluminum Alloy-Coated by the Hot Dip Process.

3. ASTM A653 Standard Specification for Steel Sheet, Zinc-Coated (Galvanized) by the Hot-Dip Process.

4. ASTM B209 Standard Specification for Aluminum and Aluminum-Alloy Sheet and Plate.

5. ASTM D1056 Standard Specification for Flexible Cellular Materials - Sponge or Expanded Rubber.

6. ASTM D3575 Standard Test Methods for Flexible Cellular Materials made from Olefin Polymers.

7. ASTM E283 Standard Test Method for Rate of Air Leakage Through Exterior Windows, Curtain Walls, and Doors Under Specified Pressure Differences Across the Specimen.

8. ASTM E331 Standard Test Method for Water Penetration of Exterior Windows, Curtain Walls, and Doors by Uniform Static Air Pressure Difference.

9. ASTM E1592 Standard Test Method for Structural Performance of Sheet Metal Roof and Siding Systems by Uniform Static Air Pressure Difference.

10. ASTM E1646 Standard Test Method for Water Penetration of Exterior Metal Roof Panel Systems by Uniform Static Air Pressure Difference.

11. ASTM E1680 Standard Test Method for Rate of Air Leakage Through Exterior Metal Roof Panel Systems.

12. ASTM E2140 - Standard Test Method for Water Penetration of Metal Roof Panel Systems by Static Water Pressure Head

E. Testing Application Standards TAS

1. TAS 100 Test Procedure for Wind and Wind Driven Rain Resistance of Discontinuous Roof Systems

2. TAS 125 Standard Requirements for Metal Roofing Systems

3. TAS 114 app. G Test Procedure for Susceptibility to Leakage of Discontinuous Roof Systems

F. Sheet Metal and Air Conditioning Contractors National Association (SMACNA):

1. Architectural Sheet Metal Manual, 5th edition.

G. Underwriters' Laboratories (UL):

1. UL 263 Fire Tests of Building Constructions and Materials.

2. UL 580 Tests for Uplift Resistance of Roof Assemblies.

3. UL 790 Tests for Fire Resistance of Roof Covering Materials.

H. Factory Mutual Research (FM):

1. FM 4470 Approval Standard for Class 1 Panel Roofs.

1.4 SUBMITTALS FOR REVIEW

A. Shop Drawings showing layout of every roof panel and structural supporting member required in the installation with side laps and end laps marked within 1% deviation of their actual location.

1. Provide details for edge conditions, seams, joints, corners, panel profiles, assembly anchoring techniques, round and square flashings and counter flashings.

2. Provide details for the attachment of the solar array system to the roofing system.

B. Samples illustrating thickness, finish, color and textures of materials.

C. Product Data: Include manufacturer's detailed material and system description, panel and field seam installation instructions, engineering performance and finish specifications. Indicate hat channel and fastener spacing.

D. Specimen Warranty: Provide an unexecuted copy of the warranty specified for this Project, identifying the terms and conditions required of the Manufacturer and the Owner.

E. Any material submitted as equal to the specified material must be accompanied by a report signed and sealed by a professional engineer licensed in the state in which the installation is to take place. This report shall show that the submitted equal meets the Design and Performance criteria in this specification. Substitution requests submitted without licensed engineer approval will be rejected for non-conformance.

1.5 SUBMITTALS FOR INFORMATION

A. Design and Test Reports: Provide the following certified test reports from an independent testing laboratory:

1. Independent laboratory testing report for system design load and seam integrity.

2. Professional engineer's documentation that roofing system incorporates sufficient allowance for stress and movement.

3. A letter from an officer of the manufacturing company certifying that the materials furnished for this project are the same as represented in tests and supporting data.

4. Manufacturer's verifications that the panels are factory roll formed.

5. ASTM E1592: Test results must clearly demonstrate compliance with the following requirements:

a. The ultimate test failure load shall be reduced by the safety factor specified in article 1.11 to determine the allowable working load for the panel system.

b. The proposed system has been tested to insure that the allowable working load of the panel system meets or exceeds the specified negative wind uplift pressures listed in article 1.11 of this specification for all roof zones.

c. The test results are applicable for the thickness, width, and profile specified. Results are not applicable for systems that are thicker or wider than the system which was tested. If the tested material was not the specialty material specified herein (for instance, the tested material was galvalume steel), then the test results shall be reduce by the ratio of the yield strength (Fy) of the specified material to the tested material.

d. The results must clearly show that the allowable clip spacing meets or exceeds the requirements specified in section 3.0 for all roof areas. Clip spacing shall not be reduced for any roof zone from that which is specified.

6. ASTM E283 and E331: Test results must clearly demonstrate compliance with the performance requirements specified in article 1.11.

7. ASTM E1646 and E1680: Test results must clearly demonstrate compliance with the performance requirements specified in article 1.11. Results are not applicable for systems that are thinner, wider, lower grade, or different material/profile than the system which was tested. The differential test pressures must be identical to those specified in article 1.11.

8. UL 790: The proposed roof panel shall be listed as a non-combustible roof covering material and be approved for use in a UL classification assembly.

9. UL 263: The proposed roof panel shall be listed for use in a UL fire rated construction assembly.

10. AAMA 501.1: Test report shall show passed ratings for panel type as specified.

11. TAS 100: Test report shall show passed ratings for panel type as specified.

12. TAS 125: Test report shall show rating no less that that as specified in article 1.11.

13. TAS 114 appendix G: Test report shall show passed ratings for panel type as specified.

14. ASTM E2140: Test report shall show passed ratings for panel type as specified.

B. Design Loads: Submit copy of manufacturer's minimum design load calculations according to ASCE 7-05, Method 2 for Components and Cladding, sealed by a registered professional engineer. In no case shall the design loads be taken to be less than those detailed in Design and Performance Criteria article.

C. Qualification Data for Roofing Installer. Refer to Quality Assurance Article below.

D. Certification of work progress inspection frequency. Refer to Quality Assurance Article below.

E. Pre-installation Roofing Conference Proceedings. Refer to Quality Assurance Article below.

1.6 CONTRACT CLOSEOUT SUBMITTALS

A. Special Project Warranty: Provide specified warranty for the Project, executed by the authorized agent of the Manufacturer.

B. Roofing Maintenance Instructions. Provide a manual of manufacturer's recommendations for maintenance of installed roofing systems.

C. Insurance Certification: Assist Owner in preparation and submittal of roof installation acceptance certification as may be necessary in connection with fire and extended coverage insurance on roofing and associated work.

D. Demonstration and Training Schedule: Provide a schedule of proposed dates and times for instruction of Owner's personnel in the maintenance requirements for completed roofing work. Refer to Part 3 for additional requirements.

1.7 QUALITY ASSURANCE

A. Installer Qualifications: Engage an Installer who has completed the Manufacturer's Approved Roofing Contractor course and is currently certified for the installation of this roof system.

B. If required, fabricator/installer shall submit work experience and evidence of adequate financial Responsibility. The Owner's representative reserves the right to inspect fabrication facilities in determining qualifications.

C. Source Limitations: Obtain all components of roof system from a single manufacturer, including roll goods materials if required. Secondary products that are required shall be recommended and approved in writing by the roofing system Manufacturer.

1. Upon request of the Architect or Owner, submit Manufacturer's written approval of secondary components in list form, signed by an authorized agent of the Manufacturer.

2. Manufacturer shall have direct authority and control over all fabrication of steel components as well as the raw materials used in their fabrication.

D. Source Quality Control: Manufacturer shall have in place a documented, standardized quality control program such as ISO-9001 approval.

E. Engage the Manufacturer's Field Representative to conduct required inspections of work in progress 2 day per week as described herein and shall furnish written documentation of all such inspections.

F. Manufacturer shall provide the Owner project with a written statement that they will provide a site inspection 2 days per week that confirms that the project is being constructed as specified, by an experienced, full time employee of the company.

G. Alternate Manufacturers: The following manufacturer criteria must be submitted. Alternate systems will not be considered for approval unless each of these items has been submitted for review at least 10 business days prior to bid opening:

1. Submit each item listed in article 1.4 (A through E) for evaluation of the proposed system.

2. Tests shall have been made for identical systems within the ranges of specified performance criteria.

3. Empirical calculations for roof performance shall only be acceptable for positive loads.

4. A list of a minimum of five (5) jobs where the proposed alternate material was used under similar conditions. The reference list shall include date of project, size of project, project address, and telephone number of architect/owner contact.

5. A financial statement demonstrating a minimum of a 3:1 ratio of assets to liabilities.

6. A written statement from the manufacturer stating that they will provide the building owner with a site inspection 2 days per week by an experienced, full time employee of the company.

7. A written statement from a corporate officer of the manufacturing company stating that he or she has reviewed the specifications and confirms that the proposed system meets or exceeds all performance requirements listed as well as meets the panel size, gauge, weight, clip design, sealant design, uplift pressures and height of the vertical seam

8. A copy of manufacturer's 30 year warranty. Warranty must include coverage for all trim, flashing, and penetrations associated with this roof.

9. Proof that the manufacturer has been in business for a minimum number of years equal to the warranty period required for this project.

H. Site Formed Panels: Site formed panels are prohibited. All metal panels must be factory pre-manufactured and engineered for this project.

1. Panels shall be formed on heavy duty factory type roll formers. Roll formers shall gradually form the panel profile utilizing no fewer than twelve (12) forming stations to improve quality and minimize oil canning.

2. All tooling shall be polished and tempered to a minimum hardness of Rockwell C - 52. Tooling shall be maintained clean and in good working condition. Tooling repairs or modifications made by means of welding, sawing, grinding, or the like are unacceptable, as they may contribute to poor quality, aesthetics, and performance of the end product.

3. Panels shall be of identical profile and characteristics as factory formed panels and specimens used as the basis of performance tests.

4. Sealant shall be factory applied in a separate factory formed snap on cap. Site/field applied seam sealant is unacceptable. Seam caps may be shipped in forty-five (45) feet or less length and lap spliced over full length panels in accordance with manufacturer's system details.

1.8 PRE-INSTALLATION CONFERENCE

A. Convene a pre-roofing conference approximately two (2) weeks before scheduled commencement of roofing system installation and associated work.

B. Require attendance of installer of each component of associated work, installers of deck or substrate construction to receive roofing work, installers of rooftop units and other work in and around roofing which must precede or follow roofing work (including mechanical work if any), Architect, Owner, roofing system manufacturer's representative, and other representatives directly concerned with performance of the Work, including (where applicable) Owner's insurers, testing agencies and governing authorities. Objectives of conference to include:

1. Review foreseeable methods and procedures related to roofing work, including set up and mobilization areas for stored material and work area.

2. Tour representative areas of roofing substrates (decks), inspect and discuss condition of substrate, roof drains, curbs, penetrations and other preparatory work performed by others.

3. Review structural loading limitations of deck and inspect deck for loss of flatness and for required attachment.

4. Review roofing system requirements (drawings, specifications and other contract documents).

5. Review required submittals both completed and yet to be completed.

6. Review and finalize construction schedule related to roofing work and verify availability of materials, installer's personnel, equipment and facilities needed to make progress and avoid delays.

7. Review required inspection, testing, certifying and material usage accounting procedures.

8. Review weather and forecasted weather conditions and procedures for coping with unfavorable conditions, including possibility of temporary roofing (if not mandatory requirement).

9. Record discussion of conference including decisions and agreements (or disagreements) reached. Furnish a copy of record to each party attending. If substantial disagreements exist at conclusion of conference, determine how disagreements will be resolved and set date for reconvening conference.

C. Review notification procedures for inclement weather or non-working days.

D. The Owner's Representative will designate one of the conference participants to record the proceedings and promptly distribute them to the participants for record.

E. The intent of the conference is to resolve issues affecting the installation and performance of roofing work. Do not proceed with roofing work until such issues are resolved the satisfaction of the Owner and Engineer of Record. This shall not be construed as interference with the progress of Work on the part of the Owner or Engineer of Record.

1.9 DELIVERY, STORAGE, AND HANDLING

A. Manufacturer's responsibilities:

1. All roof panels shall be shipped from the manufacturer with strippable film or similar packaging material separating the individual panels to minimize flexing, stressing, scratching or otherwise damaging the material during transit to the job.

2. Fully cover steel with tarpaulins or similar protective cover during transit to prevent dirt and debris from coming in contact with the finished goods.

B. Installer's responsibilities:

1. Stack pre-finished materials to prevent twisting, bending, abrasion and denting and elevate one end to facilitate moisture run-off.

2. Unload roof panels using a boom or crane, supporting the panels in at least two locations during lifting, and never lift more than three panels at a time.

3. Protect moisture-sensitive materials and water-based from the weather.

4. Inspect materials upon delivery. Reject and remove physically damaged or marred material from project site.

1.10 PROJECT CONDITIONS

A. Determine that work of other trades will not hamper or conflict with necessary fabrication and storage and protection requirements for roofing system.

1. Protection:

a. Protect completed roofing from subsequent construction operations. Comply with Manufacturer's recommendations.

b. Do not overload roof with stored materials.

c. Support no roof-mounted equipment directly on the roofing system.

B. Ascertain that work of other trades which penetrates the roof or is to be made watertight by the roof is in place an approved prior to installation of roofing.

1.11 DESIGN AND PERFORMANCE CRITERIA

A. Thermal Expansion and Contraction:

1. Completed metal roofing and flashing system shall be capable of withstanding expansion and contraction of components caused by changes in temperature without buckling, producing excess stress on structure, anchors or fasteners, or reducing performance ability.

2. The design temperature differential shall be not less than 200º F.

3. Interface between panel and clip shall provide for unlimited thermal movement in each direction along the longitudinal direction.

4. Location of metal roofing rigid connector shall be at roof ridge unless otherwise approved by the Project Architect. Metal ridge connector may require design as per job conditions by specified manufacturer.

CONFORMED

B. Uniform wind load capacity:

1. Installed roof system shall withstand negative (uplift) design wind loading pressures complying with the following criteria. Anchor clips shall be installed exactly as spacing given in article 3.0.

Each of the following is necessary to determine the appropriate design wind pressure for roof components. Please contact a Garland sales representative for assistance in determining the proper wind uplift design criteria. Typical selections are shown in black; however, every structure requires detailed attention for proper system design

a. Design Code: ASCE 7-10, Method 2 for Components and Cladding.

b. Safety Factor: 1.67 after any load reduction or material stress increase.

c. Wind Speed: 120 mph.

C. Uniform Positive Load Capacity.

1. Installed roof system shall carry positive uniform design loads with a maximum system deflection of L/180 as measured at the rib (web) of the panel.

2. Dead Load: Loading of the roof structure, due to tear off of existing, and/or installation of new roofing materials shall not exceed the present loading due to weight of the existing roofing system.

D. Underwriters' Laboratories, Inc., (UL) fire resistance P ratings for roof assemblies: If applicable, panel system shall be approved for use in an appropriate Construction Assembly, as defined by UL 263.

E. Underwriters' Laboratories, Inc., (UL) Class A fire rating per UL 790.

F. ASTM E283: Static pressure air infiltration (doors, windows, curtain walls):

1. Pressure Leakage Rate

a. 1.57 PSF 0.0007 cfm/sq.ft.

b. 6.24 PSF 0.0002 cfm/sq.ft.

c. 20.0 PSF 0.0036 cfm/sq.ft.

G. ASTM E331: Static pressure water infiltration (doors, windows, curtain walls):

Pressure Result

5 Gal./Hr. per S.F. and Static No Leakage

Pressure of 20.0 Psf for 15 minutes

H. ASTM E1680: Static pressure air infiltration (roof panels):

1. Pressure Leakage Rate

a. 1.57 PSF 0.0012 cfm/sq.ft.

b. 6.24 PSF 0.0001 cfm/sq.ft.

c. 20.0 PSF 0.0011 cfm/sq.ft.

I. ASTM E1646: Static pressure water infiltration (roof panels):

Pressure Result

5 Gal./Hr. per S.F. and Static No Leakage

Pressure of 20.0 Psf for 15 minutes

J. Capacities for gauge, span or loading other than those tested may be determined by interpolation of test results within the range of test data. Extrapolations for conditions outside test range are not acceptable.

K. Water penetration (dynamic pressure): No water penetration, other than condensation, when exposed to dynamic rain and 70 mph wind velocities for not less than five minutes duration, when tested in accord with principles of AAMA 501.1.

L. Wind and wind driven rain resistance: No water penetration or panel movement when exposed to 110 mph wind velocities when tested in accordance with TAS 100.

M. The installed roof system assembly shall show that it can resist the calculated roof pressure in section 1.11.B in accordance with the test results of TAS 125.

N. Water penetration in low slope applications: No water penetration or panel movement when subject to 6" head of water for 6 hrs when tested in accordance with the ASTM E2140 and when subject to 6" head of water for 7 days when tested in accordance with the TAS 114 appendix G.

1.12 WARRANTIES

A. Manufacturer shall execute a single warranty covering of the following criteria. Multiple-source warranties are not acceptable.

1. Manufacturer's 30 year watertight warranty, including coverage for all trim, flashings, gutters, and penetrations associated with the roof area.

2. 20 year coverage on finish including checking, crazing, peeling, chalking, fading and/or adhesion.

3. Warranty shall commence on date of substantial completion, or as agreed by contract.

4. Installer shall provide manufacturer with 2 year warranty covering roofing system installation and watertightness.

5. Provide a single warranty by a single approved manufacturer for standing seam roof areas, membrane roof areas, metal wall panels, gutter systems, coping systems soffit systems, and transitions between the material types.

1.13 MANUFACTURER'S INSPECTIONS

A. When the project is in progress, the roofing system manufacturer will inspect the work not less than 2 days per week. In addition, the manufacturer will:

1. Keep the Architect or Owner informed as to the progress and quality of the work as observed with a weekly inspection report submitted online.

2. Report to the Architect in writing any failure or refusal of the Contractor to correct unacceptable practices called to the Contractor's attention.

3. Confirm after completion that manufacturer has observed no applications procedures in conflict with the specifications other than those that may have been previously reported and corrected.

PART 2 PRODUCTS

2.1 PRODUCTS, GENERAL

A. Refer to Division 01 Section "Common Product Requirements."

B. Basis of Design: Materials, manufacturer's product designations, and/or manufacturer's names specified herein shall be regarded as the minimum standard of quality required for work of this Section. Comply with all manufacturer and contractor/fabricator quality and performance criteria specified in Part 1.

C. Substitutions: Products proposed as equal to the products specified in this Section shall be submitted in accordance with Bidding Requirements and Division 01 provisions.

1. Proposals shall be accompanied by a copy of the manufacturer's standard specification section. That specification section shall be signed and sealed by a professional engineer licensed in the state in which the installation is to take place. Substitution requests containing specifications without licensed engineer certification shall be rejected for non-conformance.

2. Include a list of three (3) projects of similar type and extent, located within a one hundred mile radius from the location of the project. In addition, the three projects must be at least five (5) years old and be available for inspection by the Architect, Owner or Owner's Representative.

3. Equivalency of performance criteria, warranty terms, submittal procedures, and contractual terms will constitute the basis of acceptance.

4. The Owner's decision regarding substitutions will be considered final. Unauthorized substitutions will be rejected.

2.2 ACCEPTABLE MANUFACTURERS

A. The design is based upon R-MER Span roofing systems engineered and manufactured by The Garland Company. Local representative Richard Jones (800) 762-8225 ext. 720

2.3 SOFFIT PANEL SYSTEM

A. Materials

1. Panel material: 032” thickness aluminum, 3105-H14 alloy, smooth as per ASTM B209-96.

2. Flashing and flat stock material. Fabricate from .032” thick aluminum in profiles indicated on drawings of same material and finish as soffit system, unless indicated otherwise.

2.4 METAL ROOFING SYSTEM

A. Materials.

1. Panel material: 24 gauge, Galvalume steel, type AZ-55, smooth as per ASTM A792-96.

2. Flashing and flat stock material: Fabricate in profiles indicated on drawings of same material, thickness, and finish as roof system, unless indicated otherwise.

B. Finishes:

1. Exposed surfaces for coated panels:

    a. Two coat coil applied, baked-on full-strength (70% resin) fluorocarbon coating system (polyvinylidene fluoride, PVF2), applied by manufacturer's approved applicator.

    b. Coating system shall provide nominal 1.0 mil dry film thickness, consisting of primer and color coat.

    c. Color shall be from GARLAND standard color selection.

0. Unexposed surfaces for coated panels shall be baked-on polyester coating with .20 - .30 dry film thickness (TDF).

1. Exposed and unexposed surfaces for uncoated panels shall be as shipped from the mill.

C. Characteristics:

1. Provide the same panel profile from a single manufacturer for all standing seam roof areas.

2. Provide standing seam panels incorporating mechanically interlocked, concealed anchor clips allowing unlimited thermal movement, and of configuration which will prevent entrance or passage of water.

    a. Panel/Cap configuration must have a total of four (4) layers of steel surrounding anchor clip for prevention of water infiltration and increased system strength designed to limit potential for panel blow-off.

    b. Profile of panel shall have mesa's every two (2) inches on center continuous throughout panel which are a minimum of one and one-half (1-1/2) inches wide.

    c. Exposed fasteners, screws and/or roof mastic are unacceptable and will be rejected. System configuration only allows for exposed fasteners at panel overlap (if required) and trim details (as per manufacturer's guidelines).

    d. Provide panels in continuous lengths from ridge to eave with no overlaps unless approved by manufacturer, in writing.

    e. Panels lengths which exceed maximum shipping lengths shall be field rolled on equipment owned by the panel manufacturer. Seam sealant must be factory applied.

    f. Seam caps shall be manufactured in the factory and may be installed with end laps. Seam sealant must be factory applied.

    g. Curved panels shall be mechanically curved to the exact radius of each curved roof area. Panels may be mechanically curved in the factory or on site. Flat panels field-conformed to the roof shape are unacceptable and will be rejected.

3. Seam must be two and three-eighths (2-3/8) inches minimum height for added upward pressures and aesthetic appeal. Seam shall have continuous anchor reveals to allow anchor clips to resist positive and negative loading and allow unlimited expansion and contraction of panels due to thermal changes. Integral (not mechanically sealed) seams are unacceptable.

    a. Two (2) piece clips are unacceptable.

    b. Sealant applied in panel cap must be isolated from clip to insure that no sealant damage occurs from the movement of the panel during expansion and contraction.

c. Clip must maintain a clearance of a minimum of three-eighths (3/8) inches between panel and substrate for proper ventilation to help prevent condensation on underside of panel and eliminate the contact of panel fastener head to panel.

d. I-SPAN Anchors: Provide anchors of continuous lengths with a zero point zero six two (0.062) inches minimum thickness of extruded aluminum, alloy 6005-T5, with projecting legs for additional panel alignment and provision for unlimited thermal movement in each direction along the longitudinal dimension.

e. Anchor shall provide non-penetrating, concealed engagement at the panel seams in a manner similar to the standard anchor clips.

f. Sealant applied in panel cap must be isolated from anchor to insure that no sealant damage occurs from the movement of the panel during expansion and contraction.

g. Anchor must maintain a clearance of a minimum of three-eighths (3/8) inches between panel and substrate for proper ventilation to help prevent condensation on underside of panel and eliminate the contact of panel fastener head to panel.

h. Anchor must maintain a clearance of a minimum of three-eighths (3/8) inches between panel and substrate for proper ventilation to help prevent condensation on underside of panel and eliminate the contact of panel fastener head to panel.

0. Seam cap: Snap-on cap shall be a minimum of 1" wide "T" shaped of continuous length up to forty-five (45) feet according to job conditions and field seamed by means of manufacturer's standard seaming machine.

a. Cap shall be designed to receive two (2) beads of continuous hot applied gasketing sealant which will be applied independent of anchor clip to allow unlimited thermal movement of panel without damage to cap sealant.

b. Sealant shall be a SIS (Styrene-Isoprene-Styrene) block copolymer type thermoplastic rubber adhesive, non-fatigue water barrier.

1. Standing Seam Panel Width: 18".

2. Stiffening ribs: Located in flat of panel to minimize oil canning and telegraphing of structural members.

7. Replace ability: Panels shall be of a symmetrical design with snap on, mechanically seamed cap configuration such that individual panels may be removable for replacement without removing adjacent panels.

8. Panel ends shall be panned at ridge, headwall, and hip conditions, or where applicable.

9. Panel length: Full length without joints, including bends.

D. Accessories.

1. Gable anchor clips for:

a. Standing Seam style.

b. Galvalume steel, type AZ-55, minimum thickness 16 gauge

0. Fasteners:

a. Concealed fasteners: Corrosion resistant steel fasteners (zinc plated, stainless steel or equal) designed to meet structural loading requirements. Provide #14 as the minimum fastener size.

b. Exposed fasteners: Series 410 stainless steel fasteners or one-eighth (1/8) inch diameter stainless steel waterproof rivets. All exposed fasteners shall be factory painted to match the color of the standing seam panels.

1. Closures: Factory precut closed cell foam meeting ASTM D1056 or ASTM D3575, enclosed in metal channel matching panels when used at hip, ridge, rake, and jamb.

2. Provide all miscellaneous accessories for complete installation.

3. Panel joint (end lap) sealant: Non-curing modified isobutylene tri-polymer tape of thickness to fully adhere to both surfaces being joined with indicated service life of 20 years.

2.5 ACCESSORY PRODUCTS

A. Sealant:

1. Acceptable product:

a. Concealed Application: Non-curing butyl sealant or equal.

b. Exposed Application: Garland SS sealant or equal.

2. Colors: As selected by architect from sealant manufacturer's standard selection.

B. Underlayment:

1. Underlayment shall be applied over entire roof area.

2. Underlayment shall be one ply of 60 mil self adhesive membrane, Aqua Block 60 or equal. Seams shall be lapped in accordance with manufacturer's recommendations.

C. Insulation:

1. Install ASTM C 1289 Type II, Class 1, Grade 2 Polyisocyanurate insulation for an R-value of 30.

D. Steel Framing:

1. Install a 16 gauge steel zee furring section to the roof deck to match the insulation height. Install zee sections perpendicular to the panel seams and space as required to accommodate the panel anchor clip spacing given in part 3.

2. Fasten the steel zee furring sections to the roof deck with the fastener called out for in the manufacturers engineering package for use with the specified roofing system.

2.6 FABRICATION

A. Shop fabricate metal roofing and flashing components to the maximum extent possible, forming metal work with clear, sharp, straight, and uniform bends and rises. Hem exposed edges of flashings.

B. Form flashing components from full single width sheet in minimum ten (10) foot lengths. Provide shop fabricated, mitered corners, joined using closed end pop rivets and joint sealant.

C. Fabricate roofing and related sheet metal work in accordance with approved shop drawings and applicable standards.

PART 3 EXECUTION

3.1 EXECUTION, GENERAL

A. Comply with requirements of Division 01 Section "Common Execution Requirements."

3.2 PREPARATION

A. Design system so that the panel installation may be started and/or terminated at any given point in the area.

1. It is understood that the ongoing operations of the Owner are of a critical nature as to leak sensitivity. Do not work on more roof area than can be restored completely watertight in one day.

B. Remove existing loose material, dirt and debris from the roof area. All accumulations of asphalt or other repair materials shall be removed to provide a smooth, flat substrate without imperfections that will be evident in the finished work.

1. Existing metal details and other metal accessories specified for re-use that interfere with the installation of the new roof system shall be carefully removed and set aside for re-use.

2. Any metal described above that will come in contact with the new roof shall be checked for type and replaced or protected if galvanic action may be a problem.

C. Strip existing contaminating material from all metal components that are indicated to be re-utilized. Protect these metal components. Replace damaged components with new of similar type and dimension.

D. Replace wood blocks and/or sleepers indicated to be replaced with new pressure-treated wood, redwood, or other form of blocking acceptable to the Manufacturer.

1. Do not use pressure-treated wood containing salt-based preservatives or materials corrosive to steel. Provide Material Safety Data Sheets to the roofing manufacturer for verification prior to installation.

E. Remove pipes, conduits or equipment indicated to be abandoned and removed.

1. All curbs, soil stacks, and other interior flashing surfaces shall be extended to a minimum of 8" above the new horizontal roof surface or shall be pressure sealed at the top edge.

3.3 INSTALLATION, GENERAL

A. Install roof system when the atmospheric dry bulb temperature is minimum 40 degrees Fahrenheit and rising.

B. Install all components of the roof system in exact accordance with the manufacturer's standard published procedures as applicable to these project conditions and substrates.

C. Install all required vapor retarder, air seals and preliminary tapered, insulating substrates required per enclosed specifications.

D. Lay out and anchor all roof framing sections or purlins according to the approved roof plan.

3.4 ROOFING AND FLASHING INSTALLATION

A. Comply with all details and install roofing materials and flashings in accordance with approved shop drawings and manufacturer's product data, within specified erection tolerances.

B. Prepare roof for the installation of standing seam panels, including:

1. Install all decking, framing, and/or furring members as indicated in this specification and bid documents.

2. Install all insulation, vapor retarder, and/or air infiltration barriers as indicated in this specification and bid documents.

3. Install all underlayments and/or temporary water proofing materials as required in this specification and bid documents. For panel installation over board insulation, include the requirement for bearing plates. Delete where applicable.

C. Directly over the completed roof substrate, install one (1) piece panel anchor clips. All anchor clips will be set on sixteen (16) gauge galvanized zee furring sections. Anchor clips will be fastened into the structural roof zee furring sections based on the following spacing pattern:

1. Clip spacing must be 5’ for Zone 1 (field)

2. Clip spacing must be 5’ for Zone 2 (eave, [ridge, hip,] and rake).

3. Clip spacing must be 5’ for Zone 3 (corners)

4. Clip spacing for Zones 2 & 3 must extend 3’ feet onto the roof area.

5. I-SPAN Anchors shall be used in lieu of standard anchor clips in the following roof zones: [Per project specific requirements].

D. Installation of Roof Panels: Roof panels can be installed by starting from either end and working towards the opposite end. Due to the symmetrical design of the specified panels system, it is also acceptable to start from the middle of the roof and work toward each end.

1. A stainless steel pop rivet shall be secured through the anchor reveal of the panel leg and extend into the arm of the panel clip located at the ridge of the system. Provide at each arm of the clip along the ridge. The panel is then anchored at both sides of the clip.

a. Capture all drilling debris during this operation with a rag or cloth placed on the panels at the drilling operation.

b. Panels are not securely attached to the roof until fixed to the anchor clip. To avoid damage and injury, all panels shall be fixed to the anchor clip immediately as they are installed.

2. Un-installed panels which are temporarily stored on the ground or roof shall be secured in place at the end of each day's work to prevent possible damage or injury.

E. Isolate dissimilar metals and masonry or concrete from metals with bituminous coating. Use gasketed fasteners where required to prevent corrosive action between fastener, substrate, and panels.

F. Limit exposed fasteners to extent indicated on shop drawings.

G. Anchorage shall allow for temperature expansion/contraction movement without stress or elongation of panels, clips, or anchors. Attach clips to structural substrate using fasteners of size and spacing as determined by manufacturer's design analysis to resist specified uplift and thermal movement forces.

H. Seal laps and joints in accordance with roofing system manufacturer's product data.

I. Coordinate flashing and sheet metal work to provide weather tight conditions at roof terminations. Fabricate and install in accordance with standards of SMACNA Manual.

J. Provide for temperature expansion/contraction movement of panels at roof penetrations and roof mounted equipment in accordance with system manufacturer's product data and design calculations.

K. Installed system shall be true to line and plane and free of dents, and physical defects. In light gauge panels with wide flat surfaces, some oil canning may be present. Oil canning does not affect the finish or structural integrity of the panel and is therefore not cause for rejection.

L. Maximum variation from true planes or lines shall be one-fourth (1/4) inch in twenty (20) feet and three-eighths (3/8) inch in forty (40) feet of more.

M. Form joints in linear sheet metal to allow for one-fourth (1/4) inch minimum expansion at twenty (20) feet on center maximum and eight (8) feet from corners.

N. At joints in linear sheet metal items, set sheet metal items in two (2) one-fourth (1/4) inch beads of butyl sealant. Extend sealant over all metal surfaces. Mate components for positive seal. Allow no sealant to migrate onto exposed surfaces.

O. Remove damaged work and replace with new, undamaged components.

P. Touch up exposed fasteners using paint furnished by roofing panel manufacturer and matching exposed panel surface finish.

Q. Clean exposed surfaces of roofing and accessories after completion of installation. Leave in clean condition at date of substantial completion. Touch up minor abrasions and scratches in finish.

3.5 CLEANING

A. Clean installed work in accordance with the manufacturer's instructions.

B. Replace damaged work than cannot be restored by normal cleaning methods.

3.6 CONSTRUCTION WASTE MANAGEMENT

A. Remove and properly dispose of waste products generated during roofing procedures. Comply with requirements of authorities having jurisdiction

3.7 FINAL INSPECTION

A. At completion of roofing installation and associated work, meet with Contractor, Architect, installer, installer of associated work, Owner, roofing system manufacturer's representative, and other representatives directly concerned with performance of roofing system.

B. Inspect roofing work and flashing of roof penetrations, walls, curbs and other equipment. List all items requiring correction or completion and furnish copy of list to each party in attendance.

C. Repair or replace deteriorated or defective work found at time above inspection as required to a produce an installation which is free of damage and deterioration at time of Substantial Completion and according to warranty requirements.

D. Notify the Contractor, Architect, & Owner upon completion of corrections.

E. Following the final inspection, provide written notice of acceptance of the installation from the roofing system manufacturer.

F. Immediately correct roof leakage during construction. If the Contractor does not respond within twenty four (24) hours, the Owner will exercise rights to correct the Work under the terms of the Conditions of the Contract.

3.8 DEMONSTRATION AND TRAINING

A. At a time and date agreed to by the Owner, instruct the Owner's facility manager, or other representative designated by the Owner, on the following procedures:

1. Roof troubleshooting procedures.
2. Notification procedures for reporting leaks or other apparent roofing problems.
3. Roofing maintenance.
4. The Owner's obligations for maintaining the roofing warranty in effect and force.
5. The Manufacturer's obligations for maintaining the roofing warranty in effect and force.

END OF SECTION

CONFORMED

SECTION 07 42 43

COMPOSITE WALL PANELS

PART 1 - GENERAL

1.1 SECTION INCLUDES

A. Composite wall panel system consisting of aluminum-faced composite panels in a rainscreen application as part of the assembly described below.

1. Metal Wall Panels over Multi-Component Framed Wall System: Aluminum-faced composite panels applied as exterior rainscreen cladding over wall framing specified in Division 06 Section "Framing and Sheathing" with exterior sheathing specified in Division 06 Section "Framing and Sheathing", an applied membrane that provides air, moisture, and water vapor control specified in Division 07 Section 07-25-00 “Weather Barriers” and insulation within the framing specified in Division 07 Section 07-21-15 "Batt Insulation". Metal wall panel installation specified in this Section includes mounting clips for panel attachment.

1.2 RELATED SECTIONS

A. Division 01 – General Conditions

B. Division 07 air barrier section for transition and flashing components of building air/moisture barrier.

C. Division 07 Section 07-62-00 "Sheet Metal Flashing and Trim" for sheet metal copings, flashings, reglets and roof drainage items.

D. Division 07 Section 07-92-00 "Joint Sealers" for field-applied joint sealants.

1.3 SYSTEM DESCRIPTION

A. Composite Metal Panel Wall System: Drained and back-ventilated rainscreen design consisting of dry seal joinery designed to minimize water penetration and induce air circulation in the space behind the panel system. Moisture weeping trim at panel base details allows water to drain out of the system.

1.4 REFERENCE STANDARDS

A. American Architectural Manufacturer's Association (AAMA):

1. AAMA 508-07 – Voluntary Test Method and Specifications for Pressure Equalized Rain Screen Wall Cladding Systems
2. AAMA 509 - Voluntary Test and Classification Method for Drained and Back Ventilated Rain Screen Wall Cladding Systems.
3. AAMA 620 - Voluntary Specification High Performance Organic Coatings on Coil Coated Architectural Aluminum.
4. AAMA 2605 - Voluntary Specification, Performance Requirements and Test Procedures

for Superior Performing Organic Coatings on Aluminum Extrusions and Panels.

B. American Society of Civil Engineers (ASCE):

1. ASCE 7 - Minimum Design Loads for Buildings and Other Structures.

C. ASTM International (ASTM):

1. ASTM A 653 - Specification for Steel Sheet, Zinc-Coated (Galvanized) or Zinc-Iron Alloy- Coated (Galvannealed) by the Hot-Dip Process.
2. ASTM B 209 - Specification for Aluminum and Aluminum Alloy Sheet and Plate.
3. ASTM C 645 - Specification for Nonstructural Steel Framing Members.
4. ASTM D 3359 - Standard Test Methods for Measuring Adhesion by Tape Tests.
5. ASTM E 84 - Test Methods for Surface Burning Characteristics of Building Materials.
6. ASTM E 329 - Standard Specification for Agencies Engaged in Construction Inspection and/or Testing.

D. National Fire Protection Association (NFPA):

1. NFPA 285 - Standard Fire Test Method for Evaluation of Fire Propagation Characteristics of Exterior Non-Load-Bearing Wall Assemblies Containing Combustible Components.

1.5 PERFORMANCE REQUIREMENTS

A. General: Provide composite wall panel system meeting performance requirements as determined by application of specified tests by a qualified testing agency on manufacturer's standard assemblies.

B. Structural Performance: Design composite wall panel system fabricated to withstand effects of indicated loads and stresses within limits and under conditions indicated below.

1. Wind Loads: Metal wall panels shall withstand the design windload of 115 mph and exposure category C.

2. Limits of Deflection: Composite wall panel system shall withstand scheduled wind pressure per manuf. specifications with the following allowable deflection:

C. System Performance: A third party test report utilizing the standard ASTM E 283, E 331 and AAMA 501 procedures following the test protocol described in AAMA 508-07 must be submitted prior to bid. Test panel must include a horizontal joint, with an imperfect air barrier.

D. Drained and Back Ventilated Rain Screen Performance: Per AAMA 509-09:

1. Water penetration through panel system: W1 classification.
2. Ventilation: V4 classification.

3. Air/Moisture Barrier: Refer to Division 07 Section "Insulated Core Metal Wall Backup Panel."
4. Air/Moisture Barrier: Refer to Division 07 air barrier section.

E. Thermal Movements: Allow for thermal movements from variations in both ambient and

internal temperatures. Accommodate movement of support structure caused by thermal expansion and contraction.

1.6 QUALITY ASSURANCE

A. Manufacturer Qualifications: Approved manufacturer listed in this Section with minimum 10 years' experience in manufacture of similar products in successful use in similar applications.

1. Approval of Comparable Products: Submit the following in accordance with project substitution requirements, within time allowed for substitution review:
   a. Product data, including certified independent test data indicating compliance with requirements.
   b. Samples of each component.
   c. Sample submittal from similar project.
   d. Project references: Minimum of 5 installations not less than 5 years old, with Owner and Architect contact information.
   e. Sample warranty.

2. Substitutions following award of contract are not allowed except as stipulated in Division 01 General Requirements.
3. Approved manufacturers must meet separate requirements of Submittals Article.

B. Wall Systems Installer Qualifications: Experienced Installer with minimum of 5 years experience with successfully completed projects of a similar nature and scope.

C. Fire Performance Characteristics: Provide metal composite wall systems with the following fire-test characteristics determined by indicated test standard as applied by UL or other testing and inspection agency acceptable to authorities having jurisdiction.

1. Surface-Burning Characteristics: Provide metal composite wall system panels with the following characteristics when tested per ASTM E 84.

   a. Flame spread index: 25 or less.
   b. Smoke developed index: 450 or less.

2. Intermediate Scale Multistory Fire Test: Representative mockup tested per NFPA 285 for a complete wall system providing air, water, vapor and thermal barriers.

1.7 ADMINISTRATIVE REQUIREMENTS

A. Preinstallation Meeting: Conduct preinstallation meeting at site attended by Owner, Architect, manufacturer's technical representative, and other trade contractors.

1. Coordinate building framing in relation to composite wall panel system.
2. Coordinate installation of building air and water barrier behind composite wall panel system.
3. Coordinate window, door and louver, and other openings and penetrations of composite wall panel system.

1.8 ACTION SUBMITTALS

A. Product Data: Manufacturer's data sheets for specified products.

B. Shop Drawings: Provide shop drawings prepared by manufacturer or manufacturer's authorized dealer. Include full elevations showing openings and penetrations. Include details of each condition of installation and attachment. Provide details at a minimum scale 1-1/2-inch per foot of all required trim and extrusions needed for a complete installation

1. Include data indicating compliance with performance requirements.
2. Indicate points of supporting structure that must coordinate with composite wall panel system installation.

B. Buy American Act Certification: Submit documentation certifying that products comply with provisions of the Buy American Act 41 U.S.C 10a – 10d.

C. Qualification Information: For Installer and Installer's field supervisor.

D. Manufacturer's warranty: Submit sample warranty.

1.9 CLOSEOUT SUBMITTALS

A. Maintenance data.

1.10 DELIVERY, STORAGE, AND HANDLING

A. Protect products of composite wall panel system during shipping, handling, and storage to prevent staining, denting, deterioration of components or other damage.

1. Deliver, unload, store, and erect composite wall panel system and accessory items without misshaping panels or exposing panels to surface damage from weather or construction operations.

1.11 \WARRANTY

A. Special Manufacturer’s Warranty: On manufacturer’s standard form, in which manufacturer agrees to repair or replace metal wall panel assemblies that fail in materials and workmanship within two years from date of Substantial Completion.

B. Special Panel Finish Warranty: On manufacturer’s standard form, in which manufacturer agrees to repair or replace wall panels that evidence deterioration of finish within 20 years from date of Substantial Completion.

PART 2 - PRODUCTS

2.1 MANUFACTURERS

A. Basis of Design: **CENTRIA, FormaBond II Composite Wall Panel System**.

1. CENTRIA Architectural Systems; Moon Township, PA 15108-2944. Tel: (800)759-7474. Tel: (412)299-8000. Fax: (412)299-8317. Email: info@CENTRIA.com. Web: www.CENTRIA.com.

2. Substitutions: Under provisions of Division 01.

2.2 MATERIALS

A. Aluminum Sheet: Smooth surface coil-coated sheet, ASTM B209.

B. Aluminum Extrusions: ASTM B 221, 3105 Aluminum.

2.3 COMPOSITE METAL PANELS

A. Composite Metal Panels: Factory-formed, aluminum-faced composite panels fabricated from two sheets of 0.020 inch (0.51 mm) thick aluminum facing sheets with metal facings bonded to thermoplastic core, and rout and return joinery.

1. Thickness: 4 mm nominal.
2. Panel Flatness: Maximum allowable distortion: 1/32 inch in 24 inches (0.794 mm in 600 mm) in any direction.
3. Panel Core: Thermo-set polymeric**[**, fire-retardant**]**.
4. Stiffeners: Manufacturer's standard stiffener as required to meet performance requirements.

B. Face Sheet Surface: Smooth.

C. Face Sheet Coil-Coated Finish:

1. Main Panels and Column Covers: Fluoropolymer Two-Coat Mica System: 0.2-mil primer with 0.8-mil 70 percent PVDF fluoropolymer color coat providing a pearlescent appearance, AAMA 620.

a. Basis of Design: **CENTRIA Sundance Mica**.
b. Color: Silversmith

2. Accent Panels: Fluoropolymer Three-Coat Metallic System: 0.2 mil primer with 0.8-mil 70 percent PVDF fluoropolymer color coat containing metal flakes, and a 0.5-mil 70 percent PVDF fluoropolymer clear coat, AAMA 620.

a. Basis of Design: **CENTRIA Sundance AM**.
b. Color: XL Pewter

3. Color: As selected by Architect from manufacturer's standard colors

D. Unexposed Finish: Manufacturer's standard primer.

E. Exposed Trim and Fastener Finish: Match panel finish.

2.4 SECONDARY METAL FRAMING

A. Miscellaneous Framing Components when required, General: Cold-formed metallic-coated steel sheet, ASTM C 645, Grade 50, with ASTM A 653/A 653M, G90 (Z180) hot-dip galvanized zinc coating.

1. Hat Channels: 0.053 inch/16 ga. (1.34 mm) minimum.

2. Sill Channels: 0.053 inch/16 ga. (1.34 mm) minimum.

2.5 ACCESSORIES

A. Provide manufacturer's factory-formed clips, shims, flashings, sealants, and tapes for a complete installation.

B. Extruded Trim: Aluminum, minimum thickness 0.060 inch (1.59 mm) for trim and 0.90 inch (2.38 mm) for structural units. Include manufacturer-provided extruded trim for the following locations and as indicated on Drawings:

1. Base trim.
2. Coping.
3. Panel installation perimeter.
4. Opening perimeters.

C. Splines: Match panel material and finish.

D. Sealants: Type recommended by composite wall panel system manufacturer for application, meeting requirements of Division 07 Section "Joint Sealants."

E. Flashing Tape: 4 inch (102 mm) wide self-adhering butyl flashing tape.

2.6 FABRICATION

A. General: Fabricate composite wall panels and accessories at factory identical to tested units using manufacturer's standard procedures and processes necessary to meet performance requirements.

1. Provide components of composite wall panel system that are products of one manufacturer, including composite panels, gaskets, head and sill trim, bottom weep, base extrusion, and metal copings.

B. Composite Panels: Fabricate composite wall panels with extruded aluminum stiffeners requiring no further fabrication or modification in field.

1. Horizontal Joints: Dry seal, drained and back ventilated.
2. Vertical Joints: Pre-formed returns with metal splineand aluminum extrusion receptors and extruded drain channels.
3. Reveals: 0.50 inch (12 mm).
4. Formed Panel Thickness: 2.50 inch (63.5 mm).

PART 3 - EXECUTION

3.1 INSPECTION

A. Examine composite wall panel system substrate with Installer present. Inspect for erection tolerances and other conditions that would adversely affect installation of composite wall panel system.

1. Inspect framing that will support composite wall panel system to determine if support components are installed as indicated on approved shop drawings and are within

tolerances acceptable to composite wall panel system manufacturer.

a. Maximum deviations acceptable to composite wall panel system manufacturer:

1) 1/4-inch in 20 feet (6.4 mm in 6 m) vertically or horizontally from face plane of framing.
2) 1/2-inch (12.7 mm) maximum deviation from flat substrate on any building elevation.

3.2 1/8-inch in 5 feet (3.2 mm in 1.5 m).

1. Confirm presence of acceptable framing members to match installation requirements of composite wall panel system.

a. Confirm framing minimum .053 inch/16 ga (1.34 mm) at maximum 24 inch (610 mm) spacing.

2. Verify that window, door, louver and other penetrations match layout on shop drawings.

B. Correct out-of-tolerance work and other deficient conditions prior to proceeding with composite wall panel system installation.

3.3 COMPOSITE WALL PANEL SYSTEM INSTALLATION

A. General: Install composite wall panel system in accordance with approved shop drawings and manufacturer's recommendations.

B. Installation: Attach panels to metal framing using recommended clips, screws, fasteners, sealants, and adhesives indicated on approved shop drawings.

1. Horizontal Joinery: Working from base of installation to top, connect upper panel to lower panel at dry seal joinery utilizing field-applied attachment clip.

2. Vertical Joinery: Provide reveal between vertical ends of panels as shown on shop drawings using hardware furnished by manufacturer.

a. Install splines where indicated.

3. Galvanic Action: Where elements of metal composite wall system will come into contact with dissimilar materials, treat faces and edges in contact with dissimilar materials as recommended by manufacturer.

C. Rainscreen Installation: Proceed with installation of manufacturer's dry seal horizontal joinery. Keep open spaces in horizontal joinery intended to ventilate cavity behind system.

3.4 FIELD QUALITY CONTROL

A. Manufacturer's Field Service: Engage a service representative authorized by metal wall panel manufacturer to inspect completed installation. Submit written report. Correct deficiencies noted in report.

3.5 CLEANING AND PROTECTION

A. Remove temporary protective films within 2 weeks of erection. Clean finished surfaces as

CONFORMED

recommended by metal wall panel manufacturer. Clear weep holes and drainage channels of obstructions, dirt, and sealant. Maintain in a clean condition during construction.

B. Replace damaged panels and accessories that cannot be repaired by field repair.

END OF SECTION

CONFORMED

SECTION 07 52 00

MODIFIED BITUMINOUS MEMBRANE ROOFING

PART 1 GENERAL

1.1 RELATED DOCUMENTS

A. Drawings and general provisions of the Contract, including the Conditions of the Contract and Division 01 Specification Sections apply to this Section.

1.2 SUMMARY

A. Section includes modified bituminous roofing system.

B. Related Work Specified Elsewhere:

1. Roofing Demolition: Section 07
2. 01 55 - Membrane Re-Roofing Procedures.
3. Metal Roof Decks: Refer to Division 05 Section - Metal Decking.
4. Rough Carpentry: Section 06 10 00 - Rough Carpentry.
5. Vapor Barrier: Section 07 26 15 - Above-Grade Vapor Barriers.
6. Sheet Metal Flashing and Trim: Section 07 62 00 - Sheet Metal Flashing and Trim.
7. Sheet Metal Roof Accessories: Section 07 71 00 - Roof Specialties.
8. Roofing Maintenance: 07 01 51 - Maintenance of Membrane Roofing.
9. Roof Windows and Skylights: Section 08 60 00 - Roof Windows and Skylights.

1.3 REFERENCES

A. American Society of Civil Engineers (ASCE):

1. ASCE 7-10, Minimum Design Loads for Buildings and Other Structures.

B. American Society for Testing and Materials (ASTM):

1. ASTM D41 Standard Specification for Asphalt Primer Used in Roofing, Dampproofing and Waterproofing.
2. ASTM D312 Standard Specification for Asphalt Used in Roofing.
3. ASTM D451 Standard Test Method for Sieve Analysis of Granular Mineral Surfacing for Asphalt Roofing Products.
4. ASTM D1079 Standard Terminology Relating to Roofing, Waterproofing and Bituminous Materials.

5. ASTM D1227 Standard Specification for Emulsified Asphalt Used as a Protective Coating for Roofing.

6. ASTM D1863 Standard Specification for Mineral Aggregate Used as a Protective Coating for Roofing.

7. ASTM D2178 Standard Specification for Asphalt Glass Felt Used as a Protective Coating for Roofing.

8. ASTM D2822 Standard Specification for Asphalt Roof Cement.

9. ASTM D4601 Standard Specification for Asphalt Coated Glass Fiber Base Sheet Used in Roofing.

10. ASTM D5147 Standard Test Method for Sampling and Testing Modified Bituminous Sheet Materials.

11. ASTM D6162 Standard Specification for Styrene Butadiene Styrene (SBS) Modified Bituminous Sheet Materials Using a Combination of Polyester and Glass Fiber Reinforcements.

12. ASTM D6163 Standard Specification for Styrene Butadiene Styrene (SBS) Modified Bituminous Sheet Materials Using Glass Fiber Reinforcements.

13. ASTM E108 Standard Test Methods for Fire Test of Roof Coverings.

C. Factory Mutual Research (FM):

1. Roof Assembly Classifications.

D. National Roofing Contractors Association (NRCA):

1. Roofing and Waterproofing Manual.

E. Underwriters Laboratories, Inc. (UL):

1. Fire Hazard Classifications.

F. Warnock Hersey (WH):

1. Fire Hazard Classifications.

G. American National Standards Institute and Single Ply Roofing Institute (ANSI/SPRI)

1. ANSI/SPRI ES-1 Testing and Certification Listing of Shop Fabricated Edge Metal. RE-1, RE-2, RE-3.

2. ANSI/SPI FX-1 2001 Standard Field Testing Procedure for determining the withdrawal resistance of roofing fasteners.

1.4 SUBMITTALS FOR REVIEW

A. Product Data: Provide manufacturer's technical product data for each type of roofing product specified. Include data substantiating that materials comply with specified requirements.

B. Samples: Submit two (2) samples of the following:

1. Rosin Sheet

2. Base Sheet
3. Ply Sheet Membrane
4. SBS Modified Surface Membrane
5. Insulation Board
6. Cover Board
7. Mechanical Fastener – All Types

C. Specimen Warranty: Provide an unexecuted copy of the warranty specified for this Project, identifying the terms and conditions required of the Manufacturer and the Owner.

D. Any material submitted as equal to the specified material must be accompanied by a report signed and sealed by a professional engineer licensed in the state in which the installation is to take place. This report shall show that the submitted equal meets the Design and Performance criteria in this specification. Substitution requests submitted without licensed engineer approval will be rejected for non-conformance.

1.5 SUBMITTALS FOR INFORMATION

A. Manufacturer's Installation Instructions: Submit installation instructions and recommendations indicating special precautions required for installing the membrane.

B. Manufacturer's Certificate: Certify that roof system furnished is approved by Factory Mutual, Underwriters Laboratories, Warnock Hersey or approved third party testing facility in accordance with ASTM E108, Class A for external fire and meets local or nationally recognized building codes.

C. Manufacturer's Certificate: Certify that materials are manufactured in the United States and conform to requirements specified herein, are chemically and physically compatible with each other, and are suitable for inclusion within the total roof system specified herein.

D. Manufacturer's Certificate: Submit a certified copy of the roofing manufacturer's ISO 9001 compliance certificate.

E. Test Reports: Submit test reports, prepared by an independent testing agency, for all modified bituminous sheet roofing, indicating compliance with ASTM D5147.

F. Wind uplift calculations per California Building Code (CBC), Chapter 15, Section 1504, ASCE 7-10 reviewed by the roofing systems manufacturer’s California licensed structural engineer.

G. Written certification from the roofing system manufacturer certifying the applicator is currently authorized for the installation of the specified roof system to achieve the required warranty term.

H. Design Loads: Submit copy of manufacturer's minimum design load calculations according to ASCE 7-10, Method 2 for Components and Cladding, professional engineer employed by the system manufacturer as a full-time staff engineer. In no case shall the design loads be taken to be less than those detailed in Design and Performance Criteria article of this specification.

I. Qualification data for firms and individuals identified in Quality Assurance Article below.

J. Perform in field fastener pull testing and provide results for review and acceptance. Supply letter from manufacturer stating securement materials, methods, and spacing required to achieve the required uplift resistance.

1.6 CONTRACT CLOSEOUT SUBMITTALS

A. General: Comply with Requirements of Division 01 Section - Closeout Submittals.

B. Special Project Warranty: Provide specified warranty for the Project, executed by the authorized agent of the Manufacturer.

C. Roofing Maintenance Instructions. Provide a manual of manufacturer's recommendations for maintenance of installed roofing systems.

D. Insurance Certification: Assist Owner in preparation and submittal of roof installation acceptance certification as may be necessary in connection with fire and extended coverage insurance on roofing and associated work.

E. Demonstration and Training Schedule: Provide a schedule of proposed dates and times for instruction of Owner's personnel in the maintenance requirements for completed roofing work. Refer to Part 3 for additional requirements.

1.7 QUALITY ASSURANCE

A. Manufacturer Qualifications: Company specializing in manufacturing the products specified in this Section with not less than 12 years documented experience and have ISO 9001 certification.

B. Installer Qualifications: Company specializing in modified bituminous roofing installation with not less than 5 years experience and authorized by roofing system manufacturer as qualified to install manufacturer's roofing materials.

C. Installer's Field Supervision: Maintain a full-time Supervisor/Foreman on job site during all phases of roofing work while roofing work is in progress. Maintain proper supervision of workmen.

D. Maintain a copy of the Contract Documents in the possession of the Supervisor/Foreman and on the roof at all times.

E. Source Limitations: All major roof components to be supplied by warranty manufacturer. Major components to include: base ply, plies, adhesives, mastics, modified membranes, reinforcing membranes and reflective coatings.

1. Upon request of the Architect or Owner, submit Manufacturer's written approval of secondary components in list form, signed by an authorized agent of the Manufacturer.

F. Source Quality Control: Manufacturer shall have in place a documented, standardized quality control program such as ISO-9001.

1.8 PRE-INSTALLATION CONFERENCE

A. Pre-Installation Roofing Conference: Convene a pre-roofing conference approximately two (2) weeks before scheduled commencement of modified bituminous roofing system installation and associated work.

B. Require attendance of installer of each component of associated work, installers of deck or substrate construction to receive roofing work, installers of rooftop units and other work in and around roofing that must precede or follow roofing work (including mechanical work if any), Architect, Owner, roofing system manufacturer's representative, and other representatives directly concerned with performance of the Work, including (where applicable) Owner's insurers, testing agencies and governing authorities. Objectives of conference include:

1. Review foreseeable methods and procedures related to roofing work, including set up and mobilization areas for stored material and work area.

2. Tour representative areas of roofing substrates (decks), inspect and discuss condition of substrate, roof drains, curbs, penetrations and other preparatory work performed by others.

3. Review structural loading limitations of deck and inspect deck for loss of flatness and for required attachment.

4. Review roofing system requirements (drawings, specifications and other contract documents).

5. Review required submittals both completed and yet to be completed.

6. Review and finalize construction schedule related to roofing work and verify availability of materials, installer's personnel, equipment and facilities needed to make progress and avoid delays.

7. Review required inspection, testing, certifying and material usage accounting procedures.

8. Review weather and forecasted weather conditions and procedures for coping with unfavorable conditions, including possibility of temporary roofing (if not mandatory requirement).

9. Record discussion of conference including decisions and agreements (or disagreements) reached and furnish copy of record to each party attending. If substantial disagreements exist at conclusion of conference, determine how disagreements will be resolved and set date for reconvening conference.

10. Review notification procedures for weather or non-working days.

C. The Owner's Representative will designate one of the conference participants to record the proceedings and promptly distribute them to the participants for record.

D. The intent of the conference is to resolve issues affecting the installation and performance of roofing work. Do not proceed with roofing work until such issues are resolved the satisfaction of to the Owner and Architect of Record. This shall not be construed as interference with the progress of Work on the part of the Owner or Architect of Record.

1.9 DELIVERY, STORAGE AND HANDLING

A. Deliver products to site with seals and labels intact, in manufacturer's original containers, dry and undamaged.

B. Store and handle roofing sheets in a dry, well-ventilated, weather-tight place to prevent moisture exposure. Store rolls of felt and other sheet materials on pallets or other raised surface. Stand all roll materials on end. Remove factory plastic wrappings to avoid condensation accumulating materials. Cover roll goods with a canvas tarpaulin or other breathable material (not polyethylene).

C. Do not leave unused materials on the roof overnight or when roofing work is not in progress unless protected from weather and other moisture sources.

D. Secure all material and equipment on the job site. If any material or equipment is stored on the roof, assure that the integrity of the deck is not compromised at any time. Damage to the deck caused by the Contractor's actions will be the sole responsibility of the Contractor, and the deck will be repaired or replaced at his expense.

1.10 MANUFACTURER'S INSPECTIONS

A. When the Project is in progress, the roofing system manufacturer will provide the following:

1. Report progress and quality of the work as observed.

2. Provide job site inspections two (2) days per week and provide electronic documentation of progress, problems, & solutions to Architect and Owner sent on a weekly basis throughout the course of construction.

3. Report to the Architect and Owner in writing any failure or refusal of the Contractor to correct unacceptable practices called to the Contractor's attention.

4. Confirm after completion that manufacturer has observed no application procedures in conflict with the specifications other than those that may have been previously reported and corrected.

1.11 PROJECT CONDITIONS

A. Proceed with roofing work only when existing and forecasted weather conditions will permit a unit of work to be installed in accordance with manufacturer's recommendations and warranty requirements.

B. Do not apply roofing insulation or membrane to damp deck surface.

C. Do not expose materials subject to water or solar damage in quantities greater than can be weatherproofed during same day.

D. All slopes greater than 2:12 require back-nailing to prevent slippage of the ply sheets. Use ring or spiral-shank one (1) inch cap nails, or screws and plates at a rate of one (1) fastener per ply (including the membrane) at each insulation stop. Place insulation stops at 16 ft o.c. for slopes less than 3:12 and four (4) ft o.c. for slopes greater than 3:12. On non-insulated systems, nail each ply directly into the deck at the rate specified above. When slope exceeds 2:12, install all plies parallel to the slope (strapping) to facilitate backnailing. Install four (4) additional fasteners at the upper edge of the membrane when strapping the plies.

1.12 SEQUENCING AND SCHEDULING

A. Sequence installation of roofing with related units of work specified in other Sections to ensure that roof assemblies, including roof accessories, flashing, trim and joint sealers, are protected against damage from effects of weather, corrosion and adjacent construction activity.

B. Complete all roofing field assembly work each day. Phased construction will not be accepted.

C. Provide manufacturer approved water cut offs at the end of the days application. Cut out and discard these materials prior to re-starting work.

1.13 WARRANTY

A. Upon completion of installation, and acceptance by the Owner and Architect, the Manufacturer will supply to the Owner a thirty (30) year No Dollar Limit (NDL) watertight warranty.

B. Installer will submit a three (3) year warranty to the membrane manufacturer with a copy directly to Owner.

C. Warranty shall commence on date of substantial completion or final payment, whichever is agreed by contract.

D. Manufacturer will provide the following services at no cost to the owner at years 2, 5, & 10, & 15.

   A. Inspection by a technical service representative and delivery of a written inspection report documenting roof conditions.

B. General rooftop housekeeping and clean-up, subject to limits, but generally including removal of incidental debris.

E. Leak responsibilities from the manufacturer to the owner in the event a roof leak should occur.

A. Provide a toll free (800) number for owner to call in leak report. Number will be monitored (24) hours per day (365) days per year.

B. Provide a response to owner within (24) hours of when call is made.

C. Provide a repair crew, at the building site, within two (2) business days of the call.

D. Provide follow up inspection to ensure repairs were completed properly.

1.14 DESIGN AND PERFORMANCE CRITERIA

A. Uniform Wind Uplift Load Capacity

1. Installed roof system shall withstand negative (uplift) design wind loading pressures complying with the following criteria. Attachment shall be installed exactly as given in Part 3.

a. Design Code: ASCE 7-10, Method 2 for Components and Cladding.

PART 2 PRODUCTS

2.1 PRODUCTS, GENERAL

A. Basis of Design: Materials, manufacturer's product designations, and/or manufacturer's names specified herein shall be regarded as the minimum standard of quality required for work of this Section. Comply with all manufacturer and contractor/fabricator quality and performance criteria specified in Part 1.

B. Substitutions: Products proposed as equal to the products specified in this Section shall be submitted in accordance with Bidding Requirements and Division 01 provisions.

1. Proposals shall be accompanied by a copy of the manufacturer's standard specification section. That specification section shall be signed and sealed by a professional engineer licensed in the state in which the installation is to take place. Substitution requests containing specifications without licensed engineer certification shall be rejected for non-conformance.

2. Include a list of three (3) projects of similar type and extent, located within a one hundred mile radius from the location of the project. In addition, the three projects must be at least five (5) years old and be available for inspection by the Architect, Owner or Owner's Representative.

3. Equivalency of performance criteria, warranty terms, submittal procedures, and contractual terms will constitute the basis of acceptance.

4. The Architect and Owner's decision regarding substitutions will be considered final. Unauthorized substitutions will be rejected.

2.2 ACCEPTABLE MANUFACTURERS

A. The design is based upon roofing systems engineered and manufactured by The Garland Company or approved equals which are approved in writing ten (10) days prior to bid date:

A. Acceptable Manufacturers: Roof manufacturer must comply with the requirements established within this section, performance properties, and individual materials identified weather expressed or implied. Manufacturer and materials identified are used to establish those levels. Subject to compliance with requirements, provide products by the following or approved equal.

1. The Garland Company Inc.

2. Or Owner and Architect Approved Equal

2.3 DESCRIPTION

A. Modified bituminous sheet roofing work including but not limited to:

1. Prepare the entire roof substrate prior to installation of insulation board.

2. Install flat and/or tapered insulation board as specified.

3. Cold Applied Adhesive: V.O.C. compliant, SBS, non-asbestos containing cold applied adhesive for roof slopes up to 3:12.

4. Install one layer of Stressbase 80 SBS 20% pre consumer recycled content, LEED 10% MR 4 recycled content, UL Environment Certified, modified ply and flashing membrane in cold applied adhesive.

5. Install one layer modified membrane & flashing membrane: (Stressply Plus FR Mineral) - Environmentally Friendly; 145 mil SBS (Styrene-Butylene-Styrene) mineral surfaced, rubber modified roofing membrane incorporating recycled rubber, fire retardant characteristics and reinforced with a fiberglass and polyester composite scrim. Recycled content 6 percent, LEED MR 4 recycled content, UL Certified. Install in cold applied adhesive.

6. Surfacing: Pyramic; Title 24, CRRC, & Energy Star approved white acrylic coating ASTM G26

7. LEED Certification: Provide a roof system to achieve or aid in the qualification of points satisfying;

a. SSC7.2 - Heat Island Effect

b. MRC4 - Recycled Content

2.4 BITUMINOUS MATERIALS

A. Asphalt Primer: V.O.C. compliant, ASTM D41.

B. Asphalt Roofing Mastic: V.O.C. compliant, ASTM D4586

C. Cold Applied Modified Membrane Adhesive: VOC Compliant: Performance Requirements:

1. Non-Volatile Content ASTM D4479 78%

2. Density @ 77 degrees ASTM D1475 9 lbs./gallon

3. Viscosity Brookfield 800-1200 grams

CONFORMED

4. Flash Point ASTM D93 100°F min. (38°C)
5. Slope: up to 3:12
6. VOC: 250 g/l max

D. Cold Applied Flashing Adhesive. VOC Compliant: Performance Requirements:

1. Non-Volatile Content ASTM D4479 70%
2. Density ASTM D1475 8.6 lbs./gal.
3. Flash Point ASTM D93 100°F (38°C)

2.5 SHEET MATERIALS

A. Red Rosin Underlayment: 36” wide x 167’ long, 500 square feet per roll.

B. Base & Base Flashing Ply (StressBase 80 Sheet): Fiberglass scrim with the following minimum performance requirements according to ASTM D5147. Properties (Finished Membrane):

1. Tensile Strength
   a. 2 in/min. @ 73.4 ± 3.6°F MD 100 lbf/in CMD 100 lbf/in
   b. 50mm/min. @ 23 ± 3°C MD 39 kN/m CMD 39 kN/m
2. Tear Strength
   a. 2 in/min. @ 73.4 ± 3.6°F MD 110 lbf CMD 110 lbf
   b. 50mm/min. @ 23 ± 3°C MD 1335 N CMD 1335 N
3. Elongation at Maximum Tensile
   a. 2 in/min. @ 73.4 ± 3.6°F MD 2.5 % CMD 2.5 %
4. Low Temperature Flexibility (ASTM D5147): Passes -20°F (-28.8°C)

D. Modified Membrane & Flashing Ply Properties: Stressply Plus FR Mineral; ASTM D6163, Type III Grade G per the minimum performance requirements of ASTM D5147.

1. Tensile Strength
   a. 2 in/min. @ 73.4 ± 3.6°F MD 310 lbf/in CMD 310 lbf/in
   b. 50 mm/min. @ 23 ± 3°C MD 54.2 kN/m CMD 54.2 kN/m
2. Tear Strength
   a. 2 in/min. @ 73.4 ± 3.6°F MD 500 lbf CMD 500 lbf
   b. 50 mm/min. @ 23 ± 3°C MD 2224 N CMD 2224 N

3. Elongation at Maximum Tensile

   a. 2 in/min. @ 73.4 ± 3.6°F MD 3.5% CMD 3.5%

   b. 50 mm/min. @ 23 ± 3°C MD 3.5% CMD 3.5%

4. Low Temperature Flexibility (ASTM D5147): Passes -30°F (-34°C)

2.6 SURFACINGS

A. White Elastomeric Roof Coating: Pyramic; Energy Star, CRCC, & Title 24 approved white acrylic roof coating: ASTM D4798

1. Weight/Gallon 12 lbs./gal. (1.44 g/cm3)

2. Non-Volatile % (ASTM D 1644) 66 min

3. Reflectance 81%

4. Emmitance 89%

5. SRI 101

2.7 RELATED MATERIALS

A. Roof Insulation base layer: (ASTM C 1289) polyisocyanurate rigid insulation board; minimum (thickness per approved plans), square edges; (minimum R factor per approved plans.). All sizes thicker than 2” are to be installed in multiple layers and have all edges stagger to the maximum dimension possible.

B. Roof Insulation top layer: Knight – Celotex Structodeck or equal, (ASTM C 208) High Density ½”, six side primed, wood fiber board, 4’ x 8’.

C. Tapered Insulation (as required and shown on drawings for crickets, or as otherwise shown on drawings): Tapered insulation board to be used as required for tapered insulation system with a minimum (slope per approved drawings) per foot slope or per approved plans. Provide sufficient crickets or saddles to ensure water does not pond on the new roof installation.

D. Nails and Fasteners: Non-ferrous metal or galvanized steel, except that hard copper nails shall be used with copper; aluminum or stainless steel nails shall be used with aluminum; and stainless steel nails shall be used with stainless steel, I addition plates should be used. Fasteners shall be self-clinching type of penetrating type as recommended by the manufacturer of the deck material. Nails and fasteners shall be flush-driven through flat metal discs of not less than one (1) inch diameter. Omit metal discs when one-piece composite nails or fasteners with heads not less than one (1) inch diameter are used.

E. Fasteners: Factory-coated steel fasteners and metal or plastic plates complying with corrosion-resistance provisions in FMG 4470, designed for fastening roofing insulation to substrate, tested by manufacturer for required pullout strength, and acceptable to roofing system manufacturer.

F. Metal Discs: Flat discs or caps of zinc-coated sheet metal not lighter than twenty eight (28) gauge and not less than three (3) inch in diameter. Form discs to prevent dishing. Bell or cup shaped caps are not acceptable.

G. Termination bar should be extruded aluminum .125 x 1"

H. Walkway Pads: Factory formed asphalt, APOC or equal. Install per approved plans.

1. ¾" for use in high traffic areas.

I. Walkway Pad Adhesive: Adhesive used to adhere approved walk way pads as recommended and furnished by the membrane manufacturer

1. Walkway pads to be installed after final roof coating.

J. Urethane Sealant: One part, non-sag sealant as approved and furnished by the membrane manufacturer for moving joints.

1. Tensile Strength (ASTM D412): 250 psi

2. Elongation (ASM D412): 950%

3. Hardness, Shore A (ASTM C920): 35

4. Adhesion-in-Peel (ASTM C920): 30 pli

. Glass Fiber Cant: Continuous triangular cross Section made of inorganic fibrous glass used as a cant strip as recommended and furnished by the membrane manufacturer.

A. Drain Flashings should be 4lb (1.8kg) sheet lead formed and rolled

B. Plumbing stacks should be 4lb (1.8kg) sheet lead formed and rolled. All plumbing stacks are to have the factory lead cap installed. Caulking and banding will not be accepted.\

PART 3 EXECUTION

3.1 EXECUTION, GENERAL

A. Comply with all requirements and manufacturer recommendations.

3.2 EXAMINATION

A. Verify that deck surfaces and project conditions are ready to receive work of this section.

B. Verify that deck is supported and secured to structural members.

C. Verify that deck is clean and smooth, free of depressions, projections or ripples, and is properly sloped to drains.

D. Verify that adjacent roof substrate components do not vary more than 1/4 inch in height.

E. Verify that deck surfaces are dry.

F. Confirm that moisture content does not exceed twelve (12) percent by moisture meter tests.

G. Verify that openings, curbs, pipes, conduit, sleeves, ducts, and other items which penetrate the roof are set solidly, and that and reglets are set in place.

3.3 GENERAL INSTALLATION REQUIREMENTS

A. Cooperate with manufacturer, inspection and test agencies engaged or required to perform services in connection with installing the roof system.

B. Insurance/Code Compliance: Where required by code, install and test the roofing system to comply with governing regulation and specified insurance requirements.

C. Protect other work from spillage of roofing materials and prevent materials from entering or clogging drains and conductors. Replace or restore other work damaged by installation of the modified bituminous roofing system.

D. Coordinate installation of roofing system components so that insulation and roofing plies are not exposed to precipitation or left exposed overnight. Provide cut-offs at end of each day's work to cover exposed ply sheets and insulation with two (2) plies of #15 organic roofing felt set in full mopping's of bitumen and with joints and edges sealed with roofing cement. Remove cut-offs immediately before resuming work.

E. Substrate Joint Penetrations: Prevent cold process adhesive from penetrating substrate joints, entering building, or damaging roofing system components or adjacent building construction.

F. Apply roofing materials as specified by manufacturer's instructions.

1. Keep roofing materials dry before and during application.

2. Do not permit phased construction.

3. Complete application of roofing plies, modified sheet and flashing in a continuous operation.

4. Begin and apply only as much roofing in one day as can be completed that same day.

3.4 INSULATION UNDERLAYMENT INSTALLATION

A. Install one layer of Red Rosin sheet over entire roof substrate prior to installation of insulation board.

B. Lap rosin sheet ends eight (8) inches (203mm). Stagger end laps twelve (12) inches (304mm) minimum.

3.5 INSULATION INSTALLATION

A. Install all insulation and roofing in strict accordance with manufacturer's current recommendations and reference standards, as specified, and as required for ASCE7-10.

B. Mechanically attach base layer of ridged insulation using fasteners at the rate of 16-16-16 at wood or metal roof decks.

C. Install boards with long joints continuous and running in a direction parallel to the roof decking. Short joints should be staggered. All joints shall be butted tightly together.

D. Install top layer of insulation with ALL joints staggered into Insul-Lock HR insulation adhesive. Maximum board size shall be 4' x 4'. ALL joints must be staggered by a minimum of 1'.

E. Tapered insulation system shall be installed as detailed on plans and as required to provide positive drainage at all roof areas. Starting at the drain sumps, install pre-formed tapered insulation in Insul-Lock HR insulation adhesive. Panels shall be installed with no gaps larger than ¼".

3.6 BASE PLY INSTALLATION

A. Install (1) one base ply in two (2) gallons per square of cold applied membrane adhesive, shingled uniformly to achieve one ply throughout over the prepared substrate. Shingle in proper direction to shed water on each large area of roofing. Prior to installation, cut sheets into 18' maximum lengths and allow to them to relax thirty minutes minimum.

B. Lap ply sheet ends eight inches. Stagger end laps twelve inches minimum.

C. Extend plies two inches beyond top edges of cants at wall and projection bases.

D. Install one (1) base ply to all perimeter and projection details.

E. Allow the one (1) ply of base sheet to cure at least thirty minutes before installing the modified membrane. However, the modified membrane must be installed the same day as the base plies.

F. Lightly broom sheet to ensure proper adhesion.

3.7 MODIFIED MEMBRANE APPLICATION

A. Solidly bonded to the base layer with specified cold adhesive at the rate of two (2) gallons per 100 square feet.

B. The roll must push a puddle of adhesive in front of it with adhesive slightly visible at all side laps. Care should be taken to eliminate air entrapment under the membrane.

C. Subsequent rolls of modified shall be installed across the roof as above with a minimum of four (4) side laps and eight (8) end laps. The end laps shall be staggered a minimum of (3). The modified membrane shall be laid in the same direction as the underlayers but the laps shall not coincide with the laps of the base layers.

D. Extend membrane two (2) beyond top edge of all cants in cold adhesive as shown on the drawings.

E. Lightly broom sheet to ensure proper adhesion.

3.8 FLASHING MEMBRANE INSTALLATION

A. Seal all curb, wall and parapet flashings with an application of mastic and mesh on a daily basis. Do not permit conditions to exist that will allow moisture to enter behind, around or under the roof or under the flashing membrane.

B. Prepare all walls, penetrations, expansion joints and where shown on the drawings to be flashed with asphalt primer at the rate of one hundred (100) square feet per gallon. Allow primer to dry tack free.

C. Use the modified membrane as the flashing membrane. Adhere to the underlying base flashing ply with specified cold adhesive in these specifications. Nail off at a minimum of eight (8) inches (203mm) o.c. from the finished roof at all vertical surfaces.

D. Solidly adhere the entire sheet of flashing membrane to the substrate. Tops of all flashings that are not run up and over curb shall be secured through termination bar 6 inches (152mm) and sealed at top.

E. Seal all vertical laps of flashing membrane with a three-course application of trowel-grade mastic and fiberglass mesh.

F. Coordinate counter flashing, cap flashings, expansion joints and similar work with modified bitumen roofing work as specified in other sections.

G. Coordinate roof accessories, miscellaneous sheet metal accessory items, including piping vents and other devices with the roofing system work as specified in other sections. When using mineralized cap sheet all stripping shall be installed prior to cap sheet installation.

3.9 FLASHING MEMBRANE INSTALLATION

. Scupper Through Wall:

1. Inspect the nailer to assure proper attachment and configuration.

2. Run one ply over nailer, into scupper hole and up flashing as in typical wall flashing detail. Assure coverage of all wood nailers.

3. Install a scupper box in a ¼ inch (6mm) bed of mastic. Assure all box seams are soldered and have a minimum four (4) inch (101mm) flange. Make sure all corners are closed and soldered. Prime scupper at a rate of 100 square feet per gallon and allow to dry.

4. Fasten flange of scupper box every three (3) inches (76mm) o.c. staggered.

5. Strip in flange of scupper box with base flashing ply covering entire area with six (6) inch (152mm) overlap on to the field of the roof and wall flashing.

6. Install a second ply of modified flashing ply in bitumen over the base flashing ply, nine (9) inches (228mm) on to the field of the roof. Apply a three-course application of mastic and mesh at all seams.

. Coping Cap:

1. Minimum flashing height is eight (8) inches (203mm) above finished roof height. Maximum flashing height is 24 inches. Prime vertical wall at a rate of 100 square feet per gallon and allow to dry.

2. Set cant in bitumen. Run all field plies over cant a minimum of two (2) inches (50mm).

3. Install base flashing ply covering entire wall and wrapped over top of wall and down face with six (6) inches (152mm) on to field of the roof and set in cold asphalt. Nail membrane at eight (8) inches (203mm) o.c.

4. Install a second ply of modified flashing ply in bitumen over the base flashing ply, nine (9) inches (228mm) on to the field of the roof. Apply a three-course application of mastic and mesh at all seams and allow to cure.

5. Install coping cap per manufacturer's recommendations.

. Surface Mounted Counterflashing:

1. Minimum flashing height is eight (8) inches (203mm) above finished roof height. Maximum flashing height is 24 inches. Prime vertical wall at a rate of 100 square feet per gallon and allow to dry.

2. Set cant in bitumen. Run all field plies over cant a minimum of two (2) inches (50mm).

3. Install base flashing ply covering wall set in bitumen with six (6) inches (152mm) on to field of the roof.

4. Install a second ply of modified flashing ply in bitumen over the base flashing ply, nine (9) inches (228mm) on to the field of the roof. Apply a three-course application of mastic and mesh at all vertical seams and allow to cure.

CONFORMED

5. Apply butyl tape to wall behind flashing. Secure termination bar through flashing, butyl tape and into wall. Alternatively use caulk to replace the butyl tape.

6. Secure counterflashing set on butyl tape above flashing at eight (8) inches (203mm) o.c. and caulk top of counterflashing.

. Equipment Support:

1. Minimum curb height is eight (8) inches (203mm) above finished roof height. Prime vertical at a rate of 100 square feet per gallon and allow to dry.

2. Set cant in bitumen. Run all field plies over cant a minimum of two (2) inches (50mm).

3. Install base flashing ply covering curb set in bitumen with six (6) inches (152mm) on to field of the roof.

4. Install a second ply of modified flashing ply in bitumen over the base flashing ply, nine (9) inches (228mm) on to the field of the roof. Attach top of membrane to top of curb and nail at eight (8) inches (203mm) o.c. Apply a three-course application of mastic and mesh at all vertical seams and allow to cure.

5. Install pre-manufactured cover. Fasten sides at 24 inches (609mm) o.c. with fasteners and neoprene washers. Furnish all joint cover laps with butyl tape between metal covers.

6. Set equipment on neoprene pad and fasten as required by equipment manufacturer.

Curb Detail/Air Handling Station :

1. Minimum curb height is eight (8) inches (203mm) above finished roof height. Prime vertical at a rate of 100 square feet per gallon and allow to dry.

2. Set cant in bitumen. Run all field plies over cant a minimum of two (2) inches (50mm).

3. Install base flashing ply covering curb set in bitumen with six (6) inches (152mm) on to field of the roof.

4. Install a second ply of modified flashing ply in bitumen over the base flashing ply, nine (9) inches (228mm) on to the field of the roof. Apply a three-course application of mastic and mesh at all vertical seams and allow to cure.

5. Install pre-manufactured counterflashing with fasteners and neoprene washers or per manufacturer's recommendations.

6. Set equipment on neoprene pad and fasten as required by equipment manufacturer.

. Pre-manufactured Curb For Equipment Support:

1. Minimum curb height is eight (8) inches (203mm) above finished roof height. Prime vertical at a rate of 100 square feet per gallon and allow to dry.

2. Run all field plies over cant of the pre-manufactured equipment support a minimum of two (2) inches.

3. Install base flashing ply covering pre-manufactured curb with six (6) inches (152mm) on to field of the roof.

4. Install a second ply of modified flashing ply installed over the base flashing ply, nine (9) inches (228mm) on to field of the roof. Attach top of membrane to top of wood curb and

nail at eight (8) inches (203mm) o.c. Apply a three-course application of mastic and mesh at all vertical seams and allow to cure.

5. Install pre-manufactured cover. Fasten sides at 24 inches (609mm) o.c. with fasteners and neoprene washers. Furnish all joint cover laps with butyl tape between metal covers.

6. Set equipment on neoprene pad and fasten as required by equipment manufacturer.

A. Exhaust Fan:

1. Minimum curb height is eight (8) inches (203mm) above finished roof height. Prime vertical at a rate of 100 square feet per gallon and allow to dry.

2. Set cant in bitumen. Run all plies over cant a minimum of two (2) inches (50mm).

3. Install base flashing ply covering curb with six (6) inches (152mm) on to field of the roof.

4. Install a second ply of modified flashing ply installed over the base flashing ply, nine (9) inches (228mm) on to field of the roof. Attach top of membrane to top of wood curb and nail at eight (8) inches (203mm) o.c. Apply a three-course application of mastic and mesh at all vertical seams and allow to cure.

5. Install metal exhaust fan over the wood nailers and flashing to act as counterflashing. Fasten per manufacturer's recommendation.

B. Passive Vent/Air Intake:

1. Minimum curb height is eight (8) inches (203mm) above finished roof height. Prime vertical at a rate of 100 square feet per gallon and allow to dry.

2. Set cant in bitumen. Run all plies over cant a minimum of two (2) inches (50mm).

3. Install base flashing ply covering curb with six (6) inches (152mm) on to the field of the roof.

4. Install a second ply of modified flashing ply installed over the base flashing ply, nine (9) inches (228mm)on to field of the roof. Attach top of membrane to top of wood curb and nail at eight (8) inches (203mm) o.c. Apply a three-course application of mastic and mesh at all vertical seams and allow to cure.

5. Install passive vent/air intake over the wood nailers and flashing to act as counterflashing. Fasten per manufacturer's recommendations.

. Roof Drain

1. Plug drain to prevent debris from entering plumbing.

2. Taper insulation to drain minimum of 24 inches (609mm) from center of drain.

3. Install two (2) base flashing plies (40 inch square minimum) in bitumen.

4. Set lead/copper flashing (30 inch square minimum) in ¼ inch (6mm) bed of mastic. Run lead/copper into drain a minimum of two (2) inches (50mm). Prime lead/copper at a rate of 100 square feet per gallon and allow to dry.

5. Run roof system plies over drain. Cut out plies inside drain bowl.

6. Install modified membrane (48 inch square minimum) in bitumen.

CONFORMED

7. Install clamping ring and assure that all plies are under the clamping ring.

8. Remove drain plug and install strainer.

A. Plumbing Stack:

1. Minimum stack height is 12 inches (609mm).

2. Run roof system over the entire surface of the roof. Seal the base of the stack with elastomeric sealant.

3. Prime flange of new sleeve. Install properly sized sleeves set in ¼ inch (6mm) bed of roof cement.

4. Install base flashing ply in bitumen.

5. Install membrane in bitumen.

6. Caulk the intersection of the membrane with elastomeric sealant.

7. Turn sleeve a minimum of one (1) inch (25mm) down inside of stack.

B. Heat Stack:

1. Minimum stack height is 12 inches (609mm).

2. Run roof system over the entire surface of the roof. Seal the base of the stack with elastomeric sealant.

3. Prime flange of new sleeve. Install properly sized sleeves set in ¼ inch (6mm) bed of roof cement.

4. Install base flashing ply in bitumen.

5. Install modified membrane in bitumen.

6. Caulk the intersection of the membrane with elastomeric sealant.

7. Install new collar over cape. Weld collar or install stainless steel draw brand.

. Passive Vent/Air Intake:

1. Minimum curb height is eight (8) inches. Prime vertical at a rate of one hundred (100) square feet per gallon and allow to dry.

2. Set cant in bitumen. Run all plies over cant a minimum of two (2) inches.

3. Install base flashing ply covering curb with six (6) inches on to the field of the roof.

4. Install a second ply of modified flashing ply installed over the base flashing ply, nine (9) inches on to field of the roof. Attach top of membrane to top of wood curb and nail at eight (8) inches o.c. Apply a three-course application of mastic and mesh at all vertical seams and allow to cure.

5. Install passive vent/air intake over the wood nailers and flashing to act as counterflashing. Fasten per manufacturers recommendations.

CONFORMED

3.10 APPLICATION OF SURFACING

A. Prior to installation of surface, obtain approval from manufacturer as to work completed. On average, at least 30 days are required prior to final surfacing.

B. Reflective Coating:

1. Allow all cold applied mastics and coating to properly dry and cure before coating application.

2. Paint all exposed roofing with manufacturer's base coat acrylic coating installed at a rate of one and a half (1.5) gallons per square, back roll entire installation required.

3. Paint all exposed roofing with manufacturer's Energy Star top coat acrylic coating installed at a rate of one and a half (1.5) gallons per square, back roll entire installation required.

3.11 FIELD QUALITY CONTROL

A. Perform field inspection and as required.

B. Correct defects or irregularities discovered during field inspection.

C. Require attendance of roofing materials manufacturers' representatives at site during installation of the roofing system. A copy of the specification should also be on site at all times.

3.12 CLEANING

A. Remove bitumen adhesive drippings from all walls, windows, floors, ladders and finished surfaces.

B. In areas where finished surfaces are soiled by asphalt or any other sources of soiling caused by work of this section, consult manufacturer of surfaces for cleaning instructions and conform to their instructions.

C. Repair or replace defaced or disfigured finishes caused by work of this section.

3.13 CONSTRUCTION WASTE MANAGEMENT

A. Remove and properly dispose of waste products generated during roofing procedures. Comply with requirements of authorities having jurisdiction.

3.14 FINAL INSPECTION

A. At completion of roofing installation and associated work, meet with Contractor, Architect, installer, installer of associated work, Owner, roofing system manufacturer's representative, and other representatives directly concerned with performance of roofing system.

B. Walk roof surface areas of the building, inspect perimeter building edges as well as flashing of roof penetrations, walls, curbs and other equipment. List all items requiring correction or completion and furnish copy of list to each party in attendance.

C. The roofing system manufacturer reserves the right to request a thermo graphic scan of the roof during final inspection to determine if any damp or wet materials have been installed. The thermo graphic scan shall be provided by the Roofing Contractor.

D. If core cuts verify the presence of damp or wet materials, the Roofing Contractor shall be required to replace the damaged areas at his own expense.

E. Repair or replace deteriorated or defective work found at time above inspection as required to a produce an installation which is free of damage and deterioration at time of Substantial Completion and according to warranty requirements.

F. Notify the Contractor, Architect, Owner upon completion of corrections.

G. Following the final inspection, provide written notice of acceptance of the installation from the roofing system manufacturer.

3.15 DEMONSTRATION AND TRAINING

A. At a time and date agreed to by the Owner, instruct the Owner's facility manager, or other representative designated by the Owner, on the following procedures:

1. Roof troubleshooting procedures.

2. Notification procedures for reporting leaks or other apparent roofing problems.

3. Roofing maintenance.

4. The Owner's obligations for maintaining the roofing warranty in effect and force.

5. The Manufacturer's obligations for maintaining the roofing warranty in effect and force.

END OF SECTION

CONFORMED

SECTION 07 62 00

SHEET METAL FLASHING AND TRIM

PART 1 GENERAL

1.1 SUMMARY

A. Section Includes:
1. Copings.
2. Gutters, scuppers, downspouts.
3. Flashings at metal and Modified Bitumen roofing.
4. Counterflashings over membrane roof base flashings.
5. Counterflashings at roof mounted equipment and utility penetrations.

B. Related Sections:
1. Division 01: General Requirements
2. Section 07 9200 - Joint Sealers.
3. Section 07 62 01 – Coping System

1.2 REFERENCES

A. American Architectural Manufacturers Association (AAMA):
1. 611 - Voluntary Specification for Anodized Architectural Aluminum.
2. 621 - Voluntary Specifications for High Performance Organic Coatings on Coil Coated Architectural Hot Dipped Galvanized (HDG) and Zinc-Aluminum Coated Steel Substrates.
3. 2604 - Voluntary Specification, Performance Requirements and Test Procedures for High Performance Organic Coatings on Architectural Extrusions and Panels.
4. 2605 - Voluntary Specification, Performance Requirements and Test Procedures for Superior Performing Organic Coatings on Architectural Extrusions and Panels.

B. American National Standards Institute/Single Ply Roofing Institute (ANSI/SPRI) ES-1 - Wind Design Standard for Edge Systems Used with Low Slope Roofing Systems.

C. ASTM International (ASTM):
1. A653/A653M - Standard Specification for Steel Sheet, Zinc-Coated (Galvanized) or Zinc-Iron Alloy Coated (Galvannealed) by the Hot-Dip Process.
2. A666 - Standard Specification for Annealed or Cold-Worked Austenitic Stainless Steel Sheet, Strip, Plate, and Flat Bar.
3. A755/A755M - Standard Specification for Steel Sheet, Metallic Coated by the Hot-Dip Process and Prepainted by the Coil-Coating Process for Exterior Exposed Building Products.
4. A792/A792M - Standard Specification for Steel Sheet, 55% Aluminum-Zinc Alloy-Coated by the Hot-Dip Process.
5. B32 - Standard Specification for Solder Metal.
6. B209 - Standard Specification for Aluminum and Aluminum-Alloy Sheet and Plate.
7. B370 - Standard Specification for Copper Sheet and Strip for Building Construction.
8. B506 - Specification for Copper-Clad Stainless Steel Sheet and Strip for Building Construction.
9. B749 - Standard Specification for Lead and Lead Alloy Strip, Sheet, and Plate Products.

D. Copper Development Association (CDA) - Contemporary Copper, A Handbook of Sheet Copper Fundamentals, Design, Details and Specifications.

E. Sheet Metal and Air Conditioning Manufacturer’s Association International (SMACNA) - Architectural Sheet Metal Manual.

1.3 SUBMITTALS

A. Submittals for Review:
   1. Shop Drawings: Show locations, types and thicknesses of metal, profiles, dimensions, fastening methods, provisions for expansion and contraction, and joint details.
   2. Samples:
      a. Each flashing and trim profile, minimum 12 inches long. Include corners where applicable.
      b. 3 x 3 inch prefinished metal samples in specified color.

1.4 QUALITY ASSURANCE

A. Fabricator and Installer Qualifications: Minimum 5 years documented experience in work of this Section.

B. Design, fabricate, and install metal copings, edge flashings in accordance with ANSI/SPRI ES-1.

C. Conform to SMACNA Manual for nominal sizing of gutters, scuppers and downspouts for rainfall intensity determined by a storm occurrence of 1 in 100 years.

PART 2 PRODUCTS

2.1 MATERIALS

A. Galvanized Steel Sheet:
   1. ASTM A653/A653M, Structural Quality, G90 galvanized coating class, 24 gage core steel unless noted otherwise.
   2. Where sheet metal is to be painted, apply phosphate film at factory.

B. Aluminum Sheet:

   1. Finish: AAMA 611; anodized, clear.

2.2 ACCESSORIES

A. Solder: ASTM B32.

B. Fasteners: Hot-dip galvanized steel, Aluminum, or Stainless steel, with neoprene gasketed washers where exposed.

C. Joint Sealers: Specified in Section 07 92 00.

2.3 FABRICATION

A. Fabricate components in accordance with SMACNA Manual.

B. Solder shop formed joints except pop rivet and seal joints at prefinished metal. After soldering, remove flux and wash clean.

C. Fabricate corners in single units.

D. Fabricate vertical faces with bottom edge formed outward 1/4 inch and hemmed to form drip.

E. Form sections accurate to size and shape, square and free from distortion and defects.

F. Provide for thermal expansion and contraction in sheet metal:

G. Unless otherwise indicated, provide minimum 3/4 inch wide flat lock seams; lap in direction of water flow.

H. Fabricate cleats and starter strips of same material as sheet metal.

PART 3 EXECUTION

3.1 INSTALLATION

A. Install flashing and sheet metal as indicated and in accordance with SMACNA Manual.

B. Install cleats and starter strips before starting installation of sheet metal. Fasten at 6 inches on center maximum.

C. Expansion Joints in Metal Copings, Edge Flashings:
1. Center backing plate between flashing pieces at end joints.
2. Apply two continuous beads of joint sealer between backing plate and flashing sections at each end.
3. Install flashing pieces with 1/2 inch expansion space at abutting ends; apply sealer to expansion space.
4. Apply two continuous beads of joint sealer between cover plate and flashing sections at each end.

D. Secure flashings with concealed fasteners where possible.

E. Apply plastic cement between metal and bituminous flashings.

F. Fit flashings tight, with square corners and surfaces true and straight.

G. Seam and seal field joints.

H. Separate dissimilar metals with bituminous coating or non-absorptive gaskets.

I. Reglets:
1. Install reglets true to line and level. Seal top of surface mounted reglet with joint sealer.
2. Install flashings into reglets to form tight fit. Secure with lead or plastic wedges at 9 inches on center maximum. Seal remaining space with joint sealer.

J. Apply joint sealers as specified in Section 07 92 00.

3.2 CLEANING

A. Clean sheet metal; remove slag, flux, stains, spots, and minor abrasions without etching surfaces.

END OF SECTION

CONFORMED

SECTION 07 62 01

COPING SYSTEM

PART 1 — GENERAL

1.1 RELATED DOCUMENTS

A. Drawings and general provisions of the Contract, including the Conditions of the Contract and Division 01 Specification Sections apply to this section.

1.2 SUMMARY

A. Provide all labor, equipment, and materials to fabricate and install the following.

1. Coping cap at parapets

B. Related Sections:

1. Division 07 Section Common Work Results for Thermal and Moisture Protection.

C. Related Work Specified Elsewhere:

1. Division 06 Section Rough Carpentry

2. Division 07 Section Modified Bituminous Membrane Roofing

1.3 REFERENCES

A. American Society for Testing and Materials (ASTM)

1. ASTM A653 Standard Specification for Steel Sheet, Zinc-Coated (galvanized) or Zinc-Iron Alloy-Coated (galvannealed) by the Hot-Dip Process.

2. ASTM A792 Standard Specification for Steel Sheet, 55% Aluminum-Zinc Alloy Coated by the Hot-Dip Process.

3. ASTM B209 Standard Specification for Aluminum and Aluminum-Alloy Sheet and Plate.

4. ASTM B221 Standard Specification for Aluminum and Aluminum-Alloy Extruded Bars, Rods, Wire, Profiles, and Tubes.

5. ASTM D692 Standard Specification for Coarse Aggregate for Bituminous Paving Mixtures.

B. American National Standards Institute and Single Ply Roofing Institute (ANSI/SPRI)

1. ANSI/SPRI ES-1 Testing and Certification Listing of Shop Fabricated Edge Metal.

C. Warnock Hersey International, Inc., Middleton, WI (WH)

D. Factory Mutual Research Corporation (FMRC

E. Underwriters Laboratories (UL)

F. Sheet Metal and Air Conditioning Contractors National Association (SMACNA)

1. 1993 Edition Architectural Sheet Metal Manual

G. National Roofing Contractors Association (NRCA)

1. Roofing and Waterproofing Manual

H. American Society of Civil Engineers (ASCE)

1. ASCE 7-05 Minimum Design Loads for Buildings and Other Structures.

1.4 SUBMITTALS FOR REVIEW

A. Product Data:

1. Provide manufacturer's specification data sheets for each product.

2. Metal material characteristics and installation recommendations.

3. Submit color chart prior to material ordering and/or fabrication so that equivalent colors to those specified can be approved.

B. Samples: Submit two (2) samples, illustrating typical metal edge, coping, gutters, fascia extenders for material and finish.

C. Shop Drawings

1. For manufactured and ANSI/SPRI approved shop fabricated gravel stops, fascia, scuppers, and all other sheet metal fabrications.

2. Indicate material profile, jointing pattern, jointing details, fastening methods, flashing, terminations, and installation details.

3. Indicate type, gauge and finish of metal.

D. Specimen Warranty: Provide an unexecuted copy of the warranty specified for this Project, identifying the terms and conditions required of the Manufacturer and the Owner.

1.5 SUBMITTALS FOR INFORMATION

A. Design Loads: Any material submitted as equal to the specified material must be accompanied by a report signed and sealed by a professional engineer licensed in the state in which the installation is to take place. This report shall show that the submitted equal meets the wind uplift and perimeter attachment requirements according to ASCE 7-05 and ANSI/SPRI ES-1. Substitution requests submitted without licensed engineer approval will be rejected for non-conformance.

B. Factory Mutual Research Corporation's (FMRC) wind uplift resistance classification: The roof perimeter flashing shall conform to the requirements as defined by the FMRC Loss Prevention Data Sheet 1-49.

C. A letter from an officer of the manufacturing company certifying that the materials furnished for this project are the same as represented in tests and supporting data.:

C. Mill production reports certifying that the steel thicknesses are within allowable tolerances of the nominal or minimum thickness or gauge specified.

D. Certification of work progress inspection. Refer to Quality Assurance Article below.

E. Certifications:

1. Submit roof manufacturer's certification that metal fasteners furnished are acceptable to roof manufacturer.

2. Submit roof manufacturer's certification that metal furnished is acceptable to roofing manufacturer as a component of roofing system and is eligible for roof manufacturer's system warranty.

1.6 CONTRACT CLOSEOUT SUBMITTALS

A. General: Comply with Requirements of Section 01 78 00 - Closeout Submittals.

B. Special Project Warranty: Provide specified warranty for the Project, executed by the authorized agent of the Manufacturer.

C. Roofing Maintenance Instructions. Provide a manual of manufacturer's recommendations for maintenance of installed roofing systems.

D. Insurance Certification: Assist Owner in preparation and submittal of roof installation acceptance certification as may be necessary in connection with fire and extended coverage insurance on roofing and associated work.

1.7 QUALITY ASSURANCE

A. Engage an experienced roofing contractor specializing in sheet metal flashing work with a minimum of five (5) years experience.

B. Maintain a full-time supervisor/foreman who is on the job-site at all times during installation. Foreman must have a minimum of five (5) years experience with the installation of similar system to that specified.

C. Source Limitation: Obtain components from a single manufacturer. Secondary products which cannot be supplied by the specified manufacturer shall be approved in writing by the primary manufacturer prior to bidding.

D. Upon request fabricator/installer shall submit work experience and evidence of financial responsibility. The Owner's representative reserves the right to inspect fabrication facilities in determining qualifications.

1.8 DELIVERY, STORAGE, AND HANDLING

A. Deliver materials in manufacturer's original, unopened containers or packages with labels intact and legible.

B. Stack pre-formed and pre-finished material to prevent twisting, bending, or abrasion, and to provide ventilation. Slope metal sheets to ensure drainage.

C. Prevent contact with materials which may cause discoloration or staining.

1.9 PROJECT CONDITIONS

A. Determine that work of other trades will not hamper or conflict with necessary fabrication and storage requirements for pre-formed metal edge system.

1.10 DESIGN AND PERFORMANCE CRITERIA

A. Thermal expansion and contraction:

1. Completed metal edge flashing system shall be capable of withstanding expansion and contraction of components caused by changes in temperature without buckling, producing excess stress on structure, anchors or fasteners, or reducing performance ability.

1.11 WARRANTIES

A. Owner shall receive one (1) warranty from manufacturer of roofing materials covering all of the following criteria. Multiple warranties are not acceptable.

1. Pre-finished metal material shall require a written twenty (20)-year non-prorated warranty covering fade, chalking and film integrity. The material shall not show a color change greater than 5 NBS color units per ASTM D2244 or chalking excess of 8 units per ASTM D659. If either occurs material shall be replaced per warranty, at no cost to the Owner.

2. Changes: Changes or alterations in the edge metal system without prior written consent from the manufacturer shall render the system unacceptable for a warranty.

3. Warranty shall commence on date of substantial completion or final payment, whichever is agreed by contract.

4. The Contractor shall provide the Owner with a notarized written warranty assuring that all sheet metal work including caulking and fasteners to be watertight and secure for a period of two years from the date of final acceptance of the building. Warranty shall include all materials and workmanship required to repair any leaks that develop, and make good any damage to other work or equipment caused by such leaks or the repairs thereof.

5. Installing roofing contractor shall be responsible for the installation of the edge metal system in general accordance with the membrane manufacturer's recommendations.

6. Installing contractor shall certify that the edge metal system has been installed per the manufacturer's printed details and specifications.

7. One manufacturer shall provide a single warranty for all accessory metal for flashings, metal edges and copings, along with the warranty for metal roof areas, membrane roof areas, and any transitions between two different material types.

PART 2 — PRODUCTS

2.1 PRODUCTS, GENERAL

A. Refer to Division 01 Section "Common Product Requirements."

B. Basis of Design: Materials, manufacturer's product designations, and/or manufacturer's names specified herein shall be regarded as the minimum standard of quality required for work of this Section. Comply with all manufacturer and contractor/fabricator quality and performance criteria specified in Part 1.

C. Substitutions: Products proposed as equal to the products specified in this Section shall be submitted in accordance with Bidding Requirements and Division 01 provisions.

1. Proposals shall be accompanied by a copy of the manufacturer's standard specification section. That specification section shall be signed and sealed by a professional engineer licensed in the state in which the installation is to take place. Substitution requests containing specifications without licensed engineer certification shall be rejected for non-conformance.

2. Include a list of three (3) projects of similar type and extent, located within a one hundred mile radius from the location of the project. In addition, the three projects must be at least five (5) years old and be available for inspection by the Architect, Owner or Owner's Representative.

3. Equivalency of performance criteria, warranty terms, submittal procedures, and contractual terms will constitute the basis of acceptance.

4. The Owner's decision regarding substitutions will be considered final. Unauthorized substitutions will be rejected.

2.2 ACCEPTABLE MANUFACTURERS

A. The design is based upon roofing systems engineered and manufactured by

The Garland Company
3800 East 91st Street
Cleveland, Ohio 44105
Telephone: (800) 762-8225 ext. 720
Website: www.garlandco.com

2.3 MATERIALS

A. General: Product designations for the materials used in this section shall be based on performance characteristics of the R-MER Edge System manufactured by the Garland Company, Cleveland, OH, and shall form the basis of the contract documents.

B. Materials:

1. Minimum gauge of steel or thickness of Aluminum to be specified in accordance with Architectural Sheet Metal Manual, Sheet Metal and Air Conditioning Contractor's National Association, Inc. recommendations.

2. Unexposed base metal material:

R-Mer Edge Coping Chairs

A. Zinc-coated steel, ASTM A653, coating designation G-90, in thickness of 0.0635 nom./ 16 gauge, 36" to 48" by coil length, chemically treated, commercial or lock-forming quality.

3. Exposed base metal material:

R-Mer Edge Coping

CONFORMED

A. Zinc-coated steel, ASTM A653, coating designation G-90, in thickness of 22 gauge, chemically treated, commercial or lock-forming quality.

C. Finishes:

1. Exposed surfaces for coated panels:

a. Steel Finishes: fluorocarbon finish. Epoxy primer baked both sides, .2-.25 mils thickness as approved by finish coat manufacturer.

Weathering finish as referred by National Coil Coaters Association (NCCA).

PROPERTY	TEST METHOD	FLUOROCARBON*
Pencil Hardness	ASTM D3363 NCCA II-2	HB-H
Bend	ASTM D-4145 NCCA II-19	O-T
Cross-Hatch Adhesion	ASTM D3359	no loss of adhesion
Gloss (60° angle)	ASTM D523	25+/-5%
Reverse Impact	ASTM D2794	no cracking or loss of adhesion
Nominal Thickness	ASTM D1005	
Primer		0.2 mils
Topcoat		0.8 mils
TOTAL		1.0 mils

* Subject to minimum quantity requirements

b. Color shall be Mill Finish

3. Exposed and unexposed surfaces for anodized aluminum flashing, fascia, and coping cap, shall be as shipped from mill.

2.4 RELATED MATERIALS AND ACCESSORIES

A. Metal Primer: Zinc chromate type.

B. Plastic Cement: ASTM D 4586

C. Sealant: Specified in Section 07900 or on drawings.

D. Underlayment: ASTM D2178, No15 asphalt saturated roofing felt.

E. Slip Sheet: Rosin sized building paper.

F. Fasteners:

1. Corrosion resistant screw fastener as recommended by metal manufacturer. Finish exposed fasteners same as flashing metal.

2. Fastening shall conform to Factory Mutual requirements or as stated on section details, whichever is more stringent.

G. Gutter and Downspout Anchorage Devices: Material as specified for system.

PART 3 — EXECUTION

3.1 EXECUTION, GENERAL

A. Refer to Division 07 Section Common Work Results for Thermal and Moisture Protection.

3.2 PROTECTION

A. Isolate metal products from dissimilar metals, masonry or concrete with bituminous paint, tape, or slip sheet. Use gasketed fasteners where required to prevent corrosive reactions.

3.3 GENERAL

A. Secure fascia to wood nailers at the bottom edge with a continuous cleat.

B. Fastening of metal to walls and wood blocking shall comply with building code standards.

C. All accessories or other items essential to the completeness of sheet metal installation, whether specifically indicated or not, shall be provided and of the same material as item to which applied.

D. Allow sufficient clearances for expansion and contraction of linear metal components. Secure metal using fasteners as required by the system. Exposed face fastening will be rejected.

3.4 INSPECTION

A. Verify that curbs are solidly set and nailing strips located.

B. Perform field measurements prior to fabrication.

C. Coordinate work with work of other trades.

D. Verify that substrate is dry, clean and free of foreign matter.

E. Commencement of installation shall be considered acceptance of existing conditions.

3.5 MANUFACTURED SHEET METAL SYSTEMS

A. Furnish and install manufactured fascia and coping cap systems in strict accordance with manufacturer's printed instructions.

B. Provide factory-fabricated accessories including, but not limited to, fascia extenders, miters, scuppers, joint covers, etc. Refer to Source limitation provision in Part 1.

3.6 SHOP-FABRICATED SHEET METAL

A. Metal work shall be shop fabricated to configurations and forms in accordance with recognized sheet metal practices.

B. Hem exposed edges.

C. Angle bottom edges of exposed vertical surfaces to form drip.

D. Lap corners with adjoining pieces fastened and set in sealant.

E. Form joints for gravel stop fascia system, coping cap with a 3/8" opening between sections. Back the opening with an internal drainage plate formed to the profile of fascia piece.

F. Install sheet metal to comply with referenced ANSI/SPRI, SMACNA and NRCA standards.

3.7 FLASHING MEMBRANE INSTALLATION

A. Snap-On Coping Cap Detail

1. Install Miters first.

2. Position base flashing of the Built-Up and/or Modified Roofing membrane over the wall edge covering nailers completely, fastening eight (8) inches on center. Install membrane and cap sheet with proper material and procedure according to manufacturer's recommendations.

3. Install minimum sixteen (16) gauge, sixteen (16) inch long by specified width anchor chair at [Contact Garland Representative] feet on center.

1. 4. Install six (6) inch wide splice plate by centering over sixteen (16) inch long by specified width anchor chair. Apply two beads of sealant to either side of the splice plate's center. Approximately two (2) inches from the coping cap joint. Install Coping Cap by hooking outside hem of coping on outside face of anchor chair. Press downward on inside edge of coping until "snap" occurs and hem is engaged on the entire chair.

3.8 CLEANING

A. Clean installed work in accordance with the manufacturer's instructions.

B. Replace damaged work than cannot be restored by normal cleaning methods.

3.9 CONSTRUCTION WASTE MANAGEMENT

A. Remove and properly dispose of waste products generated. Comply with requirements of authorities having jurisdiction

3.10 FINAL INSPECTION

A. At completion of installation and associated work, meet with Contractor, Architect, installer, installer of associated work, Owner, roofing system manufacturer's representative, and other representatives directly concerned with performance of roofing system.

B. Inspect work and flashing of roof penetrations, walls, curbs and other equipment. List all items requiring correction or completion and furnish copy of list to each party in attendance.

C. Repair or replace deteriorated or defective work found at time above inspection as required to a produce an installation which is free of damage and deterioration at time of Substantial Completion and according to warranty requirements.

D. Notify the [Owner] upon completion of corrections.

E. Following the final inspection, provide written notice of acceptance of the installation from the roofing system manufacturer.

F. Immediately correct roof leakage during construction. If the Contractor does not respond within twenty-four (24) hours, the Owner will exercise rights to correct the Work under the terms of the Conditions of the Contract.

3.11 DEMONSTRATION AND TRAINING

A. At a time and date agreed to by the Owner, instruct the Owner's facility manager, or other representative designated by the Owner, on the following procedures:

1. Troubleshooting procedures.

2. Notification procedures for reporting leaks or other apparent roofing problems.

3. Maintenance.

4. The Owner's obligations for maintaining the warranty in effect and force.

5. The Manufacturer's obligations for maintaining the warranty in effect and force.

END OF SECTION 07 62 00 - SHEET METAL FLASHING AND TRIM

CONFORMED

SECTION 07 72 33

ROOF HATCHES

PART 1 GENERAL

1.1 SUMMARY

A. Section Includes:
1. Prefabricated roof hatches with integral curbs and operating hardware.
2. Safety railing system.

B. Related Sections:
1. Division 01: General Requirements

1.2 REFERENCES

A. ASTM International (ASTM):
1. A653/A653M - Standard Specification for Steel Sheet, Zinc-Coated (Galvanized) or Zinc-Iron Alloy Coated (Galvannealed) by the Hot-Dip Process.
2. B209 - Standard Specification for Aluminum-Alloy Sheet and Plate.

1.3 SUBMITTALS

A. Submittals for Review:
1. Shop Drawings: Indicate locations, dimensions, materials, finishes, attachment, and relationship to adjacent construction.
2. Product Data: Manufacturer's literature including description of materials, finishes, operation, and installation instructions.
3. Warranty: Sample warranty form.

1.4 QUALITY ASSURANCE

A. Roof Hatches: Support minimum 40 PSF live load.

1.5 WARRANTIES

A. Furnish manufacturer’s 5 year warranty providing coverage against defective materials and workmanship.

PART 2 PRODUCTS

2.1 MANUFACTURERS

A. Design Basis: Contract Documents are based on products by Bilco Co. (www.bilco.com)

B. Equivalent products by following manufacturers are acceptable:
1. Babcock-Davis Hatchways, Inc. (www.babcockdavis.com)
2. Milcor/Commercial Products Group. (www.commercialproductsgroup.com)
3. Precision Ladders, LLC. (www.precisionladders.com)

C. Substitutions: Not permitted.

2.2 MATERIALS

A. Galvanized Steel Sheet: ASTM A653/A653M, Structural Quality, G90 coating class.

B. Insulation: Polyisocyanurate.

2.3 MANUFACTURED UNITS

A. Roof Hatch:
1. Type: Single leaf, ladder access.
2. Nominal opening size: 30 inches wide x 36 inches long.
3. Frame:
   a. Minimum 14 gage galvanized steel with 12 inch high curb, integral cap flashing, 3-1/2inch wide flanges with attachment holes and 2 inch thick insulation bonded to exterior.
   b. Minimum R-value: 12.
4. Cover:
   a. Minimum 14 gage galvanized steel exterior and 22 gage galvanized steel liner bonded to 2 inch thick insulation core.
   b. Minimum R-value: 12.

5. Hardware: Zinc coated or cadmium plated.
   a. Steel pintle hinges.
   b. Neoprene weather seal.
   c. Compression spring operated lifting mechanism.
   d. Automatic locking hold open arms.
   e. Latching device with inside and outside handles.
   f. Inside padlock hasp.
6. Finish: Factory-applied primer and polyester powder coat, sprayed and baked, Color selected from manufacturer’s standard range.

PART 3 EXECUTION

3.1 INSTALLATION

A. Install in accordance with manufacturer's instructions and approved Shop Drawings.

B. Set units plumb and level, without warp and rack.

C. Secure to supporting construction.

END OF SECTION

CONFORMED

SECTION 07 92 00

JOINT SEALERS

PART 1 GENERAL

1.1 SUMMARY

A. Section Includes:
1. Joint backup materials.
2. Joint sealers.

B. Related Sections:
1. Division 01: General Requirements
2. Division 08 – Openings
3. Section 07-62-00 – Sheet Metal Flashing and Trim
4. Section 09-29-00 – Gypsum Board

1.2 REFERENCES

A. ASTM International (ASTM):
1. C510 - Standard Test Method for Staining and Color Change of Single- or Multicomponent Joint Sealants.
2. C719 - Standard Test Method for Adhesion and Cohesion of Elastomeric Joint Sealants Under Cyclic Movement (Hockman Cycle).
3. C794 - Standard Test Method for Adhesion-In-Peel of Elastomeric Joint Sealants.
4. C834 - Standard Specification for Latex Sealing Compounds.
5. C919 - Standard Practice for Use of Sealants in Acoustical Applications.
6. C920 - Standard Specification for Elastomeric Joint Sealants.
7. C1193 - Standard Guide for Use of Joint Sealants.
8. C1248 - Standard Test Method for Staining of Porous Substrate by Joint Sealants.
9. C1330 - Standard Specification for Cylindrical Sealant Backing for Use with Cold Liquid Applied Sealants.
10. D2203 - Standard Test Method for Staining from Sealants.

1.3 SUBMITTALS

A. Submittals for Review:
1. Product Data: Indicate sealers, primers, backup materials, bond breakers, and accessories proposed for use.
2. Samples:
   a. Submit manufacturer’s standard color ranges of exposed sealant materials for Architect’s selection.
3. Warranty: Sample warranty form.
4. Closeout Submittals: Cleaning and maintenance data

1.4 QUALITY ASSURANCE

A. Manufacturer Qualifications: Firm specializing in manufacturing products specified in this Section.

B. Applicator Qualifications: Firm specializing in installing work specified in this Section with experience on at least 5 projects of similar nature in the past 3 years.

C. Maximum Volatile Organic Compound (VOC) Content; interior sealers and accessories:
1. Sealants: 250grams per liter.
2. Primers for non-porous substrates: 250grams per liter.
3. Primers for porous substrates: 775grams per liter.

D. Laboratory Pre-Construction Testing:
1. Obtain representative samples of actual substrate materials.
2. Test sealers and accessories for following:
a. Adhesion: Test to ASTM C794 and ASTM C719; determine surface preparation and required primer.
b. Compatibility: Test to ASTM C1087; determine that materials in contact with sealers do not adversely affect sealant materials or sealant color.
c. Staining: Test to ASTM D2203, ASTM C510, or ASTM C1248; determine that sealants will not stain joint substrates.
d. Pre-construction testing is not required when sealant manufacturer furnishes data acceptable to Architect based on previous testing for materials matching those of this Project.

E. Field Pre-Construction Testing: Test each joint sealer and joint substrate before beginning work of this Section:
1. Install sealers in mockups using joint preparation methods and materials recommended by sealer manufacturer.
2. Install field-test joints in inconspicuous location.
3. Test sealers using manufacturer's standard field adhesion test; verify joint preparation and primer required to obtain optimum adhesion of sealants to joint substrate.
4. When test indicates sealant adhesion failure, modify joint preparation, primer, or both and retest until joint passes sealant adhesion test.

1.5 PROJECT CONDITIONS

A. Do not apply sealers at temperatures below 40 degrees F unless approved by sealer manufacturer.

1.6 WARRANTIES

A. Furnish manufacturer’swarranty against material defects, air and water tightness, loss of adhesion, cohesion, and staining as follows:
1. Silicone sealants – 20 years
2. Urethane sealants – 5 years
3. Other sealants – 2 years

B. Furnish installer’s warranty against workmanship for 2 years.

PART 2 PRODUCTS

2.1 MANUFACTURERS

A. Acceptable Manufacturers:
1. BASF Building Systems. (www.buildingsystems.basf.com)
2. Dow Corning Corp. (www.dowcorning.com)
3. GE Silicones. (www.siliconeforbuilding.com)
4. Pecora Corp. (www.pecora.com)
5. Tremco, Inc. (www.tremcosealants.com)
6. Henry Company (www.henry.com)
7. Hilti. (www.us.hilti.com)

8. Sonneborn. (www.chemrex.com)
9. USG: (www.usg.com)

B. Substitutions: Not permitted.

2.2 MATERIALS

A. General:

1. Provide sealants that have been tested and found suitable for the substrates to which it will be applied.
2. Color: As selected by Architect from manufacturer's full range of colors.

B. Interior Building Sealant: Siliconized acrylic latex sealant; ASTM C834; single component; mildew resistant; paintable. Acceptable products:

1. Tremco Inc. Tremflex 834
2. Pecora Corp. C-20 + Silicone
3. SonnebornSonolac

C. Sanitary Sealant (interior joints with nonporous substrates around sinks and plumbing fixtures): Mildew resistant silicone sealant; ASTM C920; Type S; Grade NS; Class 25; use NT, G, A, and O; formulated with fungicide. Acceptable products:

1. Tremco, Inc. Tremsil 200
2. Pecora Corp. Pecora 898
3. Sonneborn Omniplus
4. Dow Corning Corp: 786 Silicon Selant – M
5. GE Silicones Sanitary 1700

D. Acoustical Sealant (concealed joints): Synthetic rubber sealant; ASTM C919; nondrying; nonhardening, nonstaining, nonskinning, gunnable. Acceptable products:

1. Tremco Inc. Acoustical Sealant
2. Pecora Corp. BA-98

E. Acoustical Sealant (exposed joints): Acrylic latex sealant; ASTM C834 and C919; nonstaining,nonsagging, nonoxidizing, skinnable, paintable, gunnable. Acceptable products:

1. Tremco Inc. Tremflex 834
2. Pecora Corp. AC-20 FTR
3. USG Sheetrock Acoustical Sealant
4. Hilti CP 506 Smoke and Acoustical Sealant

F. Exterior Perimeter Sealant (concrete; metal; cement plaster acrylic finish coat): Silicone sealant; ASTM C920, Type S; Grade NS; Class 25; use NT, M, G, A, and O. Acceptable products:

G.

1. Tremco, Inc. Spectrem 1, 3, and 4
2. Pecora Corp. Pecora 864
3. Dow Corning Corp: 790 Silicone Building Sealant

H. Exterior Perimeter Sealant (concrete; metal): Polyurethane sealant; ASTM C920; Type S or M; Grade NS; Class 25; use NT, M, A, G, and O. Acceptable products:

1. Tremco, Inc. Vulkem 116, Dymonic FC, and Dymeric 240FC.
2. Pecora Corp. DynaTrol II.
3. Sonneborn NP 1 or NP 2.

I. Self-Leveling Polyurethane Sealant (concrete paving and flatwork): ASTM C920; Type M; Grade P; Class 25; use T and M. Acceptable products:

1. Tremco, Inc. Vulkem 245, and THC 900/901.
2. Pecora Corp. Urexpan NR-200.
3. Sonneborn SL 2.

J. Bedding thresholds, glazing secondary seals, curtain wall joints, sheet metal flashing and trims (not exposed to ultraviolet (UV) light): Blend of butyl rubber and polyisobutylene flexible sealant; ASTM C1311. Acceptable products:

1. Tremco, Inc. Butyl Sealant.
2. Pecora Corp. BC-158 Butyl Rubber Sealant.

K. Waterproofing Mastic (pitch pan, coping caps, air conditioning ducts, edge flashing at roof penetrations): ASTM D4586, Type I; rubberized Styrene Ethylbutylene Styrene (SEBS) modified, asbestos free asphaltic sealant; ultraviolet (UV) light and shrink resistant. Acceptable products:

1. HE209 Elastomastic by Henry Company.
2. or approved equal

2.3 ACCESSORIES

A. Primers: Nonstaining, quick-drying type and consistency recommended by the sealant manufacturer for the particular application.

B. Bond Breakers: Type and consistency recommended by the sealant manufacturer for the particular application.

C. Bond Breaker Tape: Self-adhesive, polyethylene tape.

D. Joint Backing: Non-adhering backing to sealant; nonstaining, compatible with sealant and primer such as round, closed cell polyethylene foam rod; oversized 30 percent to 50 percent larger than joint width. Materials impregnated with oil, bitumen or similar materials are not permitted.

E. Joint Cleaner: Non-corrosive and nonstaining type, recommended by sealant manufacturer and compatible with joint forming materials.

2.4 MIXES

A. Mix multiple component sealers in accordance with manufacturer's instructions.
1. Mix with mechanical mixer; prevent air entrainment and overheating.
2. Continue mixing until color is uniform.

PART 3 EXECUTION

3.1 PREPARATION

A. Clean, prepare, and prime joints in accordance with manufacturer’s instructions.

B. Remove loose materials and foreign matter that might impair sealant adhesion. Clean porous materials such as concrete or masonry by grinding, sand or water blast cleaning, mechanical abrading, acid washing or a combination of these methods as required to provide a clean,

sound base surface for sealant adhesion.

1. Remove laitance by acid washing, grinding or mechanical abrading.
2. Remove form oils, release agents, chemical retardants, by sand or water blast cleaning.
3. Blow out joints with oil-free compressed air loose particles resulting from grinding, abrading, or blast cleaning prior to sealant application.

C. Mechanically or chemically clean nonporous surfaces such as metal and glass. Remove temporary protective coatings on metallic surfaces using solvents that leave no residue as recommended by metal surface manufacturer. When masking tape or strippable films are used, remove the tape or film and clean any residual adhesive. Apply and wipe-dry cleaning solvents using clean, lint-free cloths or paper towels, do not allow solvent to air dry without wiping.

D. Protect elements surrounding the work of this Section from damage or disfiguration.

3.2 APPLICATION

A. Apply sealants in accordance with ASTM C1193, manufacturer's instructions, and accepted shop drawings.

B. Apply acoustical sealants in accordance with ASTM C919, manufacturer's instructions, and accepted shop drawings.

C. Apply sealant where indicated on the drawings and at all exterior joints and openings in the building envelope that are observable sources of air or water infiltration.

D. Measure joint dimensions and size materials to achieve required width-to-depth ratios. Acceptable joint width-to-depth ratios:

Material	Joint Width	Joint Depth	
		Minimum	Maximum
Metal, glass, or other nonporous surfaces.	1/4 inch (minimum)	1/4 inch	1/4 inch
	Over 1/4 inch	1/2 of width	Equal to width
Concrete or other porous surfaces.	1/4 inch (minimum)	1/4 inch	1/4 inch
	Over 1/4 inch	1/2 of width	Equal to width
	Over 1/2 to 2 inches	1/2 inch	1/2 inch
	Over 2 inches	As recommended by sealant manufacturer.	

E. Install joint backing to achieve desired joint width-to-depth ratio. Roll the material into the joint to avoid lengthwise stretching. Do not twist or braid rod stock.

F. Install bond breaker where joint backing is not used.

G. Prime surfaces to receive joint sealant with primer recommended by sealant manufacturer.

H. Apply sealant within recommended application temperature ranges. Consult manufacturer when sealant cannot be applied within these temperature ranges. Apply masking tape where required to protect adjacent surfaces from sealant application.

I. Install sealant free of air pockets, foreign embedded matter, ridges, and sags.

J. Tool joints concave. Use dry tooling method.

3.3 CLEANING AND REPAIRING

A. Immediately clean work under provisions of Section 01 70 00.

B. Clean adjacent soiled surfaces. Use a solvent or cleaning agent as recommended by the sealant manufacturer. Remove any masking tape immediately after tooling joints, leaving finished work in neat and clean condition.

C. Repair or replace defaced or disfigured caused by work of this Section.

3.4 PROTECTION OF FINISHED WORK

A. Protect finished installation under provisions of Section 01 50 00.

B. Protect sealant until cured.

C. Do not paint sealants until sealant is fully cured.

D. Do not paint silicone sealant.

E. Protect joint sealants from contact with contaminating substances and from damage. Cut out, remove and replace contaminated or damaged sealants, immediately, so that they are without contamination or damage at time of project completion

END OF SECTION

CONFORMED

SECTION 08 06 71

DOOR HARDWARE SCHEDULE

PART 1 - GENERAL

1.1 RELATED DOCUMENTS

A. Drawings and general provisions of the Contract, including General and Supplementary Conditions and Division 1 Specification Sections, apply to this Section.

1.2 SUMMARY

A. This Section references specification sections relating to commercial door hardware for the following:

1. Swinging doors.
2. Sliding Doors.
3. Other doors to the extent indicated.

B. Commercial door hardware includes, but is not necessarily limited to, the following:

1. Mechanical door hardware.
2. Electromechanical and access control door hardware.
3. Electromechanical and access control door hardware power supplies, back-ups and surge protection.
4. Automatic operators.
5. Cylinders specified for doors in other sections.

C. Related Sections:

1. Division 08 Section “Hollow Metal Doors and Frames”.
2. Division 08 Section “Door Hardware”.
3. Division 08 Section “Automatic Door Operators”.

D. Codes and References: Comply with the version year adopted by the Authority Having Jurisdiction.

1. ANSI A117.1 - Accessible and Usable Buildings and Facilities.
2. ICC/IBC - International Building Code.
3. NFPA 70 - National Electrical Code.
4. NFPA 80 - Fire Doors and Windows.
5. NFPA 101 - Life Safety Code.
6. NFPA 105 - Installation of Smoke Door Assemblies.
7. State Building Codes, Local Amendments.

E. Standards: Reference Related Sections for requirements regarding compliance with applicable industry standards.

CONFORMED

1.3 SUBMITTALS

A. Product Data: Manufacturer's product data sheets including installation details, material descriptions, dimensions of individual components and profiles, operational descriptions and finishes.

B. Door Hardware Schedule: Prepared by or under the supervision of supplier, detailing fabrication and assembly of door hardware, as well as procedures and diagrams. Coordinate the final Door Hardware Schedule with doors, frames, and related work to ensure proper size, thickness, hand, function, and finish of door hardware.

1. Format: Comply with scheduling sequence and vertical format in DHI's "Sequence and Format for the Hardware Schedule."

2. Organization: Organize the Door Hardware Schedule into door hardware sets indicating complete designations of every item required for each door or opening. Organize door hardware sets in same order as in the Door Hardware Sets at the end of Part 3. Submittals that do not follow the same format and order as the Door Hardware Sets will be rejected and subject to resubmission.

3. Content: Include the following information:

   a. Type, style, function, size, label, hand, and finish of each door hardware item.
   b. Manufacturer of each item.
   c. Fastenings and other pertinent information.
   d. Location of door hardware set, cross-referenced to Drawings, both on floor plans and in door and frame schedule.
   e. Explanation of abbreviations, symbols, and codes contained in schedule.
   f. Mounting locations for door hardware.
   g. Door and frame sizes and materials.

4. Submittal Sequence: Submit the final Door Hardware Schedule at earliest possible date, particularly where approval of the Door Hardware Schedule must precede fabrication of other work that is critical in the Project construction schedule. Include Product Data, Samples, Shop Drawings of other work affected by door hardware, and other information essential to the coordinated review of the Door Hardware Schedule.

C. Keying Schedule: Prepared under the supervision of the Owner, separate schedule detailing final keying instructions for locksets and cylinders in writing. Include keying system explanation, door numbers, key set symbols, hardware set numbers and special instructions. Owner to approve submitted keying schedule prior to the ordering of permanent cylinders.

D. Product Test Reports: Indicating compliance with cycle testing requirements, based on evaluation of comprehensive tests performed by manufacturer and witnessed by a qualified independent testing agency.

E. Operating and Maintenance Manuals: Provide manufacturers operating and maintenance manuals for each item comprising the complete door hardware installation in quantity as required in Division 01, Closeout Submittals. The manual to include the name, address, and contact information of the manufacturers providing the hardware and their nearest service representatives. The final copies delivered after completion of the installation test to include "as built" modifications made during installation, checkout, and acceptance.

F. Warranties and Maintenance: Special warranties and maintenance agreements specified in the Related Sections.

CONFORMED

1.4 QUALITY ASSURANCE

A. Manufacturers Qualifications: Engage qualified manufacturers with a minimum [5] years of documented experience in producing hardware and equipment similar to that indicated for this Project and that have a proven record of successful in-service performance.

B. Installer Qualifications: Installers, trained by the primary product manufacturers, with a minimum [3] years documented experience installing both standard and electrified builders hardware similar in material, design, and extent to that indicated for this Project and whose work has resulted in construction with a record of successful in-service performance.

C. Door Hardware Supplier Qualifications: Experienced commercial door hardware distributors with a minimum [5] years documented experience supplying both mechanical and electromechanical hardware installations comparable in material, design, and extent to that indicated for this Project. Supplier recognized as a factory direct distributor in good standing by the manufacturers of the primary materials with a warehousing facility in Project's vicinity. Supplier to have on staff a certified Architectural Hardware Consultant (AHC) available during the course of the Work to consult with Contractor, Architect, and Owner concerning both standard and electromechanical door hardware and keying.

D. Source Limitations: Obtain each type and variety of Door Hardware specified in the Related Sections from a single source, qualified supplier unless otherwise indicated.

E. Regulatory Requirements: Comply with NFPA 70, NFPA 80, NFPA 101 and ANSI A117.1 requirements and guidelines as directed in the applicable model building code.

F. Pre-Submittal Conference: Conduct coordination conference in compliance with requirements in Division 01 Section "Project Meetings" with attendance by representatives of Supplier(s), Installer(s), and Contractor(s) to review proper methods and the procedures for receiving, handling, and installing door hardware.

1.5 DELIVERY, STORAGE, AND HANDLING

A. Inventory door hardware on receipt and provide secure lock-up and shelving for door hardware delivered to Project site. Do not store electronic access control hardware, software or accessories at Project site without prior authorization.

B. Tag each item or package separately with identification related to the final Door Hardware Schedule, and include basic installation instructions with each item or package.

C. Deliver, as applicable, permanent keys, cylinders, cores, access control credentials, software and related accessories directly to Owner via registered mail or overnight package service. Instructions for delivery to the Owner shall be established at the "Keying Conference".

1.6 COORDINATION

A. Templates: Obtain and distribute to the parties involved templates for doors, frames, and other work specified to be factory prepared for installing standard and electrified hardware. Check Shop Drawings of other work to confirm that adequate provisions are made for locating and installing hardware to comply with indicated requirements.

B. Door and Frame Preparation: Division 08 Sections (Steel, Aluminum and Wood) doors and corresponding frames are to be prepared, reinforced and pre-wired (if applicable) to receive the

installation of the specified electrified, monitoring, signaling and access control system hardware without additional in-field modifications.

1.7 WARRANTY

A. General Warranty: Reference Division 01, General Requirements. Special warranties specified in this Article shall not deprive Owner of other rights Owner may have under other provisions of the Contract Documents and shall be in addition to, and run concurrent with, other warranties made by Contractor under requirements of the Contract Documents.

1.8 MAINTENANCE SERVICE

A. Maintenance Tools and Instructions: Furnish a complete set of specialized tools and maintenance instructions as needed for Owner's continued adjustment, maintenance, and removal and replacement of door hardware.

PART 2 - PRODUCTS

2.1 SCHEDULED DOOR HARDWARE

A. Refer to “PART 3 – EXECUTION” for required specification sections.

PART 3 - EXECUTION

3.1 DOOR HARDWARE SETS

A. The door hardware sets represent the design intent and direction of the owner and architect. They are a guideline only and should not be considered a detailed hardware schedule. Discrepancies, conflicting hardware and missing items should be brought to the attention of the architect with corrections made prior to the bidding process. Omitted items not included in a hardware set should be scheduled with the appropriate additional hardware required for proper application and functionality.

B. The supplier is responsible for handing and sizing all products as listed in the door hardware sets. Quantities listed are for each pair of doors, or for each single door.

C. Products listed in the Door Hardware Sets must meet the requirements described in the specification sections noted.

1. Section 08 71 00 – Door Hardware.
2. Section 08 71 13 – Automatic Door Operators.
3. Section 08 74 00 – Access Control Hardware.

D. Manufacturer’s Abbreviations:

1. MK - McKinney
2. PE - Pemko

3. SA - Sargent
4. RF - Rixson
5. NO - Norton
6. RO - Rockwood
7. SU - Securitron
8. 00 - Other

Hardware Schedule

Set: 1.0

Doors: 101A, 101B

2	Continuous Hinge	CFM HD1 PT		PE	087100
1	Access Control CVR	DG1 16 43 56-H2-AD-8606 ETL	US32D	SA	087400
1	Exit Device	DG1 16 43 56 AD8610 ETL	US32D	SA	087100
2	Concealed Overhead Stop	1-X36	630	RF	087100
2	Door Operator	6030 D	689	NO	087113
2	Push Plate	639		NO	087113
1	Threshold	Per Sill Detail		PE	087100
1	Rain Guard	346C		PE	087100
2	Sweep	18062CNB		PE	087100
2	ElectroLynx Harness	QC-C1500P		MK	087400
2	Electric Power Transfer	EL-CEPT		SU	087400
2	ElectroLynx Harness	QC-C006P		MK	087400
1	Keyswitch	MKA2		SU	087400
1	Power Supply	BPS-24		SU	087400

Notes: Weatherstripping and Astragal by Aluminum Door Supplier
Wiring and electrical interface by Security Contractor

Set: 2.0

Doors: 105A, 105B

1	Continuous Hinge	CFM HD1		PE	087100
1	Exit Device	DG1 16 43 AD8504 ETL	US32D	SA	087100
1	Door Closer	CPS7500	689	NO	087100
1	Threshold	Per Sill Detail		PE	087100
1	Rain Guard	346C		PE	087100
1	Sweep	18062CNB		PE	087100

Notes: Weatherstripping by Aluminum Door Supplier

Set: 3.0

Doors: 113A, 114A

1	Continuous Hinge	CFM HD1 PT		PE	087100
1	Integrated Card Reader Lock	DG1 H2-82271 LNL	US26D	SA	087400
1	Door Closer	CPS7500	689	NO	087100
1	Kick Plate	K1050 10" high 4BE CSK	US32D	RO	087100
1	Threshold	Per Sill Detail		PE	087100
1	Rain Guard	346C		PE	087100
1	Gasketing	2891APK		PE	087100
1	Sweep	18062CNB		PE	087100
1	ElectroLynx Harness	QC-C1500P		MK	087400
1	ElectroLynx Harness	QC-C400P		MK	087400
1	Electric Power Transfer	EL-CEPT		SU	087400
1	Power Supply	BPS-24		SU	087400

Notes: Wiring and electrical interface by Security Contractor
Door Operation: Door is normally closed and locked. Upon valid presentation of credential lever will unlock. Free egress at all times. Upon loss of power or fire alarm door will remain locked (Fail Secure)

Set: 4.0

Doors: 122A

1	Continuous Hinge	CFM HD1 PT		PE	087100
1	Integrated Card Reader Lock	DG1 H2-82271 LNL	US26D	SA	087400
1	Door Closer	7500	689	NO	087100
1	Kick Plate	K1050 10" high 4BE CSK	US32D	RO	087100
1	Door Stop	466	Black	RO	087100
1	Threshold	Per Sill Detail		PE	087100
1	Rain Guard	346C		PE	087100
1	Gasketing	2891APK		PE	087100
1	Sweep	18062CNB		PE	087100
1	ElectroLynx Harness	QC-C1500P		MK	087400
1	ElectroLynx Harness	QC-C400P		MK	087400
1	Electric Power Transfer	EL-CEPT		SU	087400
1	Power Supply	BPS-24		SU	087400

Notes: Wiring and electrical interface by Security Contractor
Door Operation: Door is normally closed and locked. Upon valid presentation of credential lever will unlock. Free egress at all times. Upon loss of power or fire alarm door will remain locked (Fail Secure)

Set: 5.0

Doors: 112A

1	Continuous Hinge	CFM HD1		PE	087100
1	Continuous Hinge	CFM HD1 PT		PE	087100

1	Removable Mullion	L980S	PC	SA	087100
1	Exit Device (exit only)	DG1 16 43 8810	US32D	SA	087100
1	Access Control Rim Exit	DG1 16 43 56-H2-8804 ETL	US32D	SA	087400
1	Cylinder	DG1 41	US15	SA	
2	Door Closer	CPS7500	689	NO	087100
2	Kick Plate	K1050 10" high 4BE CSK	US32D	RO	087100
1	Threshold	Per Sill Detail		PE	087100
1	Rain Guard	346C		PE	087100
1	Gasketing	2891APK		PE	087100
2	Sweep	18062CNB		PE	087100
1	ElectroLynx Harness	QC-C1500P		MK	087400
1	Electric Power Transfer	EL-CEPT		SU	087400
1	ElectroLynx Harness	QC-C006P		MK	087400
1	Power Supply	BPS-24		SU	087400

Notes: Wiring and electrical interface by Security Contractor
Operational Narrative - Doors are normally closed and locked. Upon presentation of valid credential, door will momentarily unlatch. Free egress at all times. Upon loss of power or activation of the fire alarm, doors will remain closed and locked. Fail Secure

Set: 6.0

Doors: 105C

2	Continuous Hinge	CFM HD1		PE	087100
1	Exit Device	DG1 NB 16 43 AD8410	US32D	SA	087100
1	Exit Device	DG1 NB 16 43 AD8413 ETL	US32D	SA	087100
2	Door Closer	CPS7500	689	NO	087100

Notes: Balance of hardware by Aluminum Door Supplier

Set: 7.0

Doors: 104A, 115A

3	Hinge	TA2714 4-1/2" x 4-1/2"	US26D	MK	087100
1	Storeroom Lock	DG1 8204 LNL	US26D	SA	087100
1	Door Closer	CPS7500	689	NO	087100
1	Kick Plate	K1050 10" high 4BE CSK	US32D	RO	087100
3	Silencer	608		RO	087100

Set: 8.0

Doors: 118A

3	Hinge	TA2714 4-1/2" x 4-1/2"	US26D	MK	087100
1	Storeroom Lock	DG1 8204 LNL	US26D	SA	087100
1	Door Closer	7500	689	NO	087100

1 Kick Plate	K1050 10" high 4BE CSK	US32D	RO	087100
1 Wall Stop	403	US26D	RO	087100
3 Silencer	608		RO	087100

Set: 9.0

Doors: 106A, 109A, 110A

3 Hinge	TA2714 4-1/2" x 4-1/2"	US26D	MK	087100
1 Office Lock	DG1 LB 8205 LNL	US26D	SA	087100
1 Wall Stop	403	US26D	RO	087100
3 Silencer	608		RO	087100

Set: 10.0

Doors: 108A, 119A, 119B, 120A, 121A

3 Hinge	TA2714 4-1/2" x 4-1/2"	US26D	MK	087100
1 Passage Set	8215 LNL	US26D	SA	087100
1 Wall Stop	403	US26D	RO	087100
3 Silencer	608		RO	087100

Set: 11.0

Doors: 107A, 111A

2 Hinge	TA2714 4-1/2" x 4-1/2"	US26D	MK	087100
1 Hinge	TA2714 QCW 4-1/2" x 4-1/2"	US26D	MK	087100
1 Integrated Card Reader Lock	DG1 H2-82271 LNL	US26D	SA	087400
1 Door Closer	7500	689	NO	087100
1 Kick Plate	K1050 10" high 4BE CSK	US32D	RO	087100
1 Wall Stop	403	US26D	RO	087100
3 Silencer	608		RO	087100
1 ElectroLynx Harness	QC-C1500P		MK	087400
1 ElectroLynx Harness	QC-C400P		MK	087400
1 Power Supply	BPS-24		SU	087400

Notes: Wiring and electrical interface by Security contractor
Door Operation: Door is normally closed and locked. Upon valid presentation of credential lever will unlock. Free egress at all times. Upon loss of power or fire alarm door will remain locked (Fail Secure)

Set: 12.0

Doors: 122B

2 Hinge	TA2714 NRP 4-1/2" x 4-1/2"	US26D	MK	087100
1 Hinge	TA2714 QCW 4-1/2" x 4-1/2"	US26D	MK	087100
1 Integrated Card Reader Lock	DG1 H2-82271 LNL	US26D	SA	087400

1	Door Closer	7500	689	NO	087100
1	Kick Plate	K1050 10" high 4BE CSK	US32D	RO	087100
1	Wall Stop	403	US26D	RO	087100
3	Silencer	608		RO	087100
1	ElectroLynx Harness	QC-C1500P		MK	087400
1	ElectroLynx Harness	QC-C400P		MK	087400
1	Power Supply	BPS-24		SU	087400

Notes: Wiring and electrical interface by Security Consultant
Operational Narrative - Door is normally closed and locked. Upon presentation of valid credential door will momentarily unlock. Free egress at all times. Upon loss of power or activation of the fire alarm door will remain closed and locked.

Set: 13.0

Doors: 116A, 117A

3	Hinge	TA2714 4-1/2" x 4-1/2"	US26D	MK	087100
1	Privacy Set	LB 8265 LNL	US26D	SA	087100
1	Door Closer	7500	689	NO	087100
1	Mop Plate	K1050 6" high 4BE CSK	US32D	RO	087100
1	Kick Plate	K1050 10" high 4BE CSK	US32D	RO	087100
1	Wall Stop	403	US26D	RO	087100
3	Silencer	608		RO	087100

Set: 14.0

Doors: CO-102, CO-103

1	By Others				00

END OF SECTION

CONFORMED

SECTION 08 11 13

HOLLOW METAL DOORS AND FRAMES

PART 1 - GENERAL

1.1 RELATED DOCUMENTS

A. Drawings and general provisions of the Contract, including General and Supplementary Conditions and Division 01 Specification Sections, apply to this Section.

1.2 SUMMARY

A. Section Includes:

1. Standard and custom hollow metal doors and frames.
2. Steel sidelight, borrowed lite and transom frames.
3. Louvers installed in hollow metal doors.
4. Light frames and glazing installed in hollow metal doors.

B. Related Sections:

1. Division 04 Section "Unit Masonry" for embedding anchors for hollow metal work into masonry construction.
2. Division 08 Section "Clad Wood Doors".
3. Division 08 Section "Glazing" for glass view panels in hollow metal doors.
4. Division 08 Section "Door Hardware".
5. Division 08 Section "Access Control Hardware".
6. Division 09 Sections "Exterior Painting" and "Interior Painting" for field painting hollow metal doors and frames.

C. Codes and References: Comply with the version year adopted by the Authority Having Jurisdiction.

1. ANSI/SDI A250.8 - Recommended Specifications for Standard Steel Doors and Frames.
2. ANSI/SDI A250.4 - Test Procedure and Acceptance Criteria for Physical Endurance for Steel Doors, Frames, Frames Anchors and Hardware Reinforcing.
3. ANSI/SDI A250.6 - Recommended Practice for Hardware Reinforcing on Standard Steel Doors and Frames.
4. ANSI/SDI A250.10 - Test Procedure and Acceptance Criteria for Prime Painted Steel Surfaces for Steel Doors and Frames.
5. ANSI/SDI A250.11 - Recommended Erection Instructions for Steel Frames.
6. ASTM A1008 - Standard Specification for Steel Sheet, Cold-Rolled, Carbon, Structural, High-Strength Low-Alloy and High-Strength Low-Alloy with Improved Formability.
7. ASTM A653 - Standard Specification for Steel Sheet, Zinc-Coated (Galvanized) or Zinc-Iron Alloy-Coated (Galvannealed) by the Hot-Dip Process.
8. ASTM A924 - Standard Specification for General Requirements for Steel Sheet, Metallic-Coated by the Hot-Dip Process.
9. ASTM C 1363 - Standard Test Method for Thermal Performance of Building Assemblies by Means of a Hot Box Apparatus.
10. ANSI/BHMA A156.115 - Hardware Preparation in Steel Doors and Frames.
11. ANSI/SDI 122 - Installation and Troubleshooting Guide for Standard Steel Doors and Frames.

CONFORMED

12. ANSI/NFPA 80 - Standard for Fire Doors and Fire Windows; National Fire Protection Association.
13. ANSI/NFPA 105: Standard for the Installation of Smoke Door Assemblies.
14. NFPA 252 - Standard Methods of Fire Tests of Door Assemblies; National Fire Protection Association.
15. UL 10C - Positive Pressure Fire Tests of Door Assemblies.
16. UL 1784 - Standard for Air Leakage Tests of Door Assemblies.

1.3 SUBMITTALS

A. Product Data: For each type of product indicated. Include construction details, material descriptions, core descriptions, hardware reinforcements, profiles, anchors, fire-resistance rating, and finishes.

B. Door hardware supplier is to furnish templates, template reference number and/or physical hardware to the steel door and frame supplier in order to prepare the doors and frames to receive the finish hardware items.

C. Shop Drawings: Include the following:

1. Elevations of each door design.
2. Details of doors, including vertical and horizontal edge details and metal thicknesses.
3. Frame details for each frame type, including dimensioned profiles and metal thicknesses.
4. Locations of reinforcement and preparations for hardware.
5. Details of anchorages, joints, field splices, and connections.
6. Details of accessories.
7. Details of moldings, removable stops, and glazing.
8. Details of conduit and preparations for power, signal, and control systems.

D. Samples for Verification:

1. Samples are only required by request of the architect and for manufacturers that are not current members of the Steel Door Institute.

1.4 QUALITY ASSURANCE

A. Source Limitations: Obtain hollow metal doors and frames through one source from a single manufacturer wherever possible.

B. Quality Standard: In addition to requirements specified, comply with ANSI/SDI A250.8, latest edition, "Recommended Specifications for Standard Steel Doors and Frames".

C. Fire-Rated Door Assemblies: Assemblies complying with NFPA 80 that are listed and labeled by a qualified testing agency, for fire-protection ratings indicated, based on testing at positive pressure according to NFPA 252 (neutral pressure at 40” above sill) or UL 10C.

1. Oversize Fire-Rated Door Assemblies Construction: For units exceeding sizes of tested assemblies, attach construction label certifying doors are built to standard construction requirements for tested and labeled fire rated door assemblies except for size.
2. Temperature-Rise Limit: Where indicated and at vertical exit enclosures (stairwell openings) and exit passageways, provide doors that have a maximum transmitted temperature end point of not more than 450 deg F (250 deg C) above ambient after 30 minutes of standard fire-test exposure.
3. Smoke Control Door Assemblies: Comply with NFPA 105.

a. Smoke "S" Label: Doors to bear “S” label, and include smoke and draft control gasketing applied to frame and on meeting stiles of pair doors.

D. Fire-Rated, Borrowed-Light Frame Assemblies: Assemblies complying with NFPA 80 that are listed and labeled, by a testing and inspecting agency acceptable to authorities having jurisdiction, for fire-protection ratings indicated, based on testing according to NFPA 257. Provide labeled glazing material.

E. Energy Efficient Exterior Openings: Comply with minimum thermal ratings, based on ASTM C1363. Openings to be fabricated and tested as fully operable, thermal insulating door and frame assemblies.

1. Thermal Performance (Exterior Openings): Independent testing laboratory certification for exterior door assemblies being tested in accordance with ASTM C1363 and meet or exceed the following requirements:

a. Door Assembly Operable U-Factor and R-Value Ratings: U-Factor 0.29, R-Value 3.4, including insulated door, thermal-break frame and threshold.

2. Air Infiltration (Exterior Openings): Independent testing laboratory certification for exterior door assemblies being tested in accordance with ASTM E283 to meet or exceed the following requirements:

a. Rate of leakage of the door assembly shall not exceed 0.25 cfm per square foot of static differential air pressure of 1.567 psf (equivalent to 25 mph wind velocity).

F. Pre-Submittal Conference: Conduct conference in compliance with requirements in Division 01 Section "Project Meetings" with attendance by representatives of Supplier, Installer, and Contractor to review proper methods and procedures for installing hollow metal doors and frames and to verify installation of electrical knockout boxes and conduit at frames with electrified or access control hardware.

1.5 DELIVERY, STORAGE, AND HANDLING

A. Deliver hollow metal work palletized, wrapped, or crated to provide protection during transit and Project site storage. Do not use non-vented plastic.

B. Deliver welded frames with two removable spreader bars across bottom of frames, tack welded to jambs and mullions.

C. Store hollow metal work under cover at Project site. Place in stacks of five units maximum in a vertical position with heads up, spaced by blocking, on minimum 4-inch high wood blocking. Do not store in a manner that traps excess humidity.

1. Provide minimum 1/4-inch space between each stacked door to permit air circulation. Door and frames to be stacked in a vertical upright position.

1.6 PROJECT CONDITIONS

A. Field Measurements: Verify actual dimensions of openings by field measurements before fabrication.

1.7 COORDINATION

A. Coordinate installation of anchorages for hollow metal frames. Furnish setting drawings, templates, and directions for installing anchorages, including sleeves, concrete inserts, anchor bolts, and items with integral anchors. Deliver such items to Project site in time for installation.

1.8 WARRANTY

A. Special Warranty: Manufacturer's standard form in which manufacturer agrees to repair or replace doors that fail in materials or workmanship within specified warranty period.

B. Warranty includes installation and finishing that may be required due to repair or replacement of defective doors.

PART 2 - PRODUCTS

2.1 MANUFACTURERS

A. Manufacturers: Subject to compliance with requirements, provide products by one of the following:

1. CECO Door Products.
2. Curries Company.

2.2 MATERIALS

A. Cold-Rolled Steel Sheet: ASTM A 1008/A 1008M, Commercial Steel (CS), Type B; suitable for exposed applications.

B. Metallic-Coated Steel Sheet: ASTM A 653/A 653M, Commercial Steel (CS), Type B; with minimum G60 (Z180) or A60 (ZF180) metallic coating.

C. Frame Anchors: ASTM A 653/A 653M, Commercial Steel (CS), Commercial Steel (CS), Type B; with minimum G60 (Z180) or A60 (ZF180) metallic coating.

2.3 HOLLOW METAL DOORS

A. General: Provide 1-3/4 inch doors of design indicated, not less than thickness indicated; fabricated with smooth surfaces, without visible joints or seams on exposed faces unless otherwise indicated. Comply with ANSI/SDI A250.8 and ANSI/NAAMM HMMA 867.

B. Exterior Doors (Energy Efficient): Face sheets fabricated of commercial quality hot-dipped zinc coated steel that complies with ASTM A924 A60. Provide doors complying with requirements indicated below by referencing ANSI/SDI A250.8 for level and model, ANSI/SDI A250.4 for physical performance level, and HMMA 867 for door construction.

1. Design: Flush panel.
2. Core Construction: Foamed in place polyurethane and steel stiffened laminated core with no stiffener face welds, in compliance with HMMA 867 “Laminated Core”.

a. Provide 22 gauge steel stiffeners at 6 inches on-center internally welded at 5" on-center to integral core assembly, foamed in place polyurethane core chemically bonded to all interior surfaces. No stiffener face welding is permitted.
b. Thermal properties to rate at a fully operable minimum U-Factor 0.29 and R-Value 3.4, including insulated door, thermal-break frame and threshold.

1) Kerf Type Frames: Thermal properties to rate at a fully operable minimum U-Factor 0.36 and R-Value 2.7, including insulated door, kerf type frame, and threshold.

3. Level/Model: Level 2 and Physical Performance Level A (Heavy Duty), Minimum 18 gauge (0.042 inch - 1.1-mm) thick steel, Model 2.
4. Vertical Edges: Vertical edges to be mechanically interlocked with hairline seam. Beveled Lock Edge, 1/8 inch in 2 inches (3 mm in 50 mm).
5. Top and Bottom Edges: Reinforce tops and bottoms of doors with a continuous steel channel not less than 16 gauge, extending the full width of the door and welded to the face sheet. Doors with an inverted top channel to include a steel closure channel, screw attached, with the web of the channel flush with the face sheets of the door. Plastic or composite channel fillers are not acceptable.
6. Hinge Reinforcement: Minimum 7 gauge (3/16") plate 1-1/4" x 9".
7. Hardware Reinforcements: Fabricate according to ANSI/SDI A250.6 with reinforcing plates from same material as door face sheets.

C. Exterior Doors: Face sheets fabricated of commercial quality hot-dipped zinc coated steel that complies with ASTM A 653/A 653M, Coating Designation A60. Provide doors complying with requirements indicated below by referencing ANSI/SDI A250.8 for level and model and ANSI/SDI A250.4 for physical performance level:

1. Design: Flush panel.
2. Level/Model: Level 2 and Physical Performance Level B (Heavy Duty), Minimum 18 gauge (0.042-inch - 1.0-mm) thick steel, Model 2.
3. Top and Bottom Edges: Reinforce tops and bottoms of doors with a continuous steel channel not less than 16 gauge, extending the full width of the door and welded to the face sheet. Doors with an inverted top channel to include a steel closure channel, screw attached, with the web of the channel flush with the face sheets of the door. Plastic or composite channel fillers are not acceptable.
4. Hinge Reinforcement: Minimum 7 gauge (3/16") plate 1-1/4" x 9" or minimum 14 gauge continuous channel with pierced holes, drilled and tapped.
5. Hardware Reinforcements: Fabricate according to ANSI/SDI A250.6 with reinforcing plates from same material as door face sheets.

D. Interior Doors (Energy Efficient): Face sheets fabricated of commercial quality cold rolled steel that complies with ASTM A366 or 620. Provide doors complying with requirements indicated below by referencing ANSI/SDI A250.8 for level and model and ANSI/SDI A250.4 for physical performance level:

1. Design: Flush panel.
2. Core Construction: Steel stiffened laminated core with fiberglass filler with no stiffener face welds, in compliance with HMMA 867 “Laminated Core”.

a. Provide 22 gauge steel-stiffeners at 6 inches on-center internally welded at 5" on-center to integral core assembly, No stiffener face welding is permitted.
b. Acoustical sound transmission rating shall be no less than STC 38 complying with ASTM E 90 and must be visible on factory applied labels.

3. Level/Model: Level 2 and Physical Performance Level A (Heavy Duty), Minimum 18 gauge (0.042 inch - 1.1-mm) thick steel, Model 2.
4. Vertical Edges: Vertical edges-to be mechanically interlocked with hairline seam. Beveled Lock Edge, 1/8 inch in 2 inches (3 mm in 50 mm).
5. Top and Bottom Edges: Reinforce tops and bottoms of doors with a continuous steel channel not less than 16 gauge, extending the full width of the door and welded to the face sheet. Doors with an inverted top channel to include a steel closure channel, screw attached, with the web of the channel flush with the face sheets of the door. Plastic or composite channel fillers are not acceptable.
6. Hinge Reinforcement: Minimum 7 gauge (3/16") plate 1-1/4" x 9".
7. Hardware Reinforcements: Fabricate according to ANSI/SDI A250.6 with reinforcing plates from same material as door face sheets.

E. Interior Doors: Face sheets fabricated of commercial quality cold rolled steel that complies with ASTM A 1008/A 1008M. Provide doors complying with requirements indicated below by referencing ANSI/SDI A250.8 for level and model and ANSI/SDI A250.4 for physical performance level:

1. Design: Flush panel.

    a. Fire Door Core: As required to provide fire-protection and temperature-rise ratings indicated.

2. Level/Model: Level 2 and Physical Performance Level B (Heavy Duty), Minimum 18 gauge (0.042-inch - 1.0-mm) thick steel, Model 2.
3. Top and Bottom Edges: Reinforce tops and bottoms of doors with a continuous steel channel not less than 16 gauge, extending the full width of the door and welded to the face sheet.
4. Hinge Reinforcement: Minimum 7 gauge (3/16") plate 1-1/4" x 9" or minimum 14 gauge continuous channel with pierced holes, drilled and tapped.
5. Hardware Reinforcements: Fabricate according to ANSI/SDI A250.6 with reinforcing plates from same material as door face sheets.

F. Manufacturers Basis of Design:

1. CECO Door Products Energy Efficient: Trio-E Series.
2. Curries Company Energy Efficient: 777 Trio-E Series.

2.4 HOLLOW METAL FRAMES

A. General: Comply with ANSI/SDI A250.8 and with details indicated for type and profile.

B. Weatherstripped Frames: Subject to the same compliance standards and requirements as standard hollow metal frames, provide where indicated weatherstripped profiles with 1/8" integral kerf formed into the frame soffit able to receive manufacturer's listed gasket material. Available for use in both masonry and drywall construction, with fire rating up to 3 hours complying with NFPA 105, UL 1784, and ASTM E-283 Test criteria.

C. Exterior Frames: Fabricated of hot-dipped zinc coated steel that complies with ASTM A 653/A 653M, Coating Designation A60.

1. Fabricate frames with mitered or coped corners. Profile as indicated on drawings.
2. Manufacturers Basis of Design:

a. CECO Door Products – SU Series.
b. Curries Company – M Series.

D. Interior Frames: Fabricated from cold-rolled steel sheet that complies with ASTM A 1008/A 1008M.

1. Fabricate frames with mitered or coped corners. Profile as indicated on drawings.
2. Manufacturers Basis of Design:

a. CECO Door Products SU Series.
b. Curries Company M Series.

E. Fire rated frames: Fabricate frames in accordance with NFPA 80, listed and labeled by a qualified testing agency, for fire-protection ratings indicated.

F. Hardware Reinforcement: Fabricate according to ANSI/SDI A250.6 Table 4 with reinforcement plates from same material as frames.

2.5 FRAME ANCHORS

A. Jamb Anchors:

1. Masonry Type: Adjustable strap-and-stirrup or T-shaped anchors to suit frame size, formed from A60 metallic coated material, not less than 0.042 inch thick, with corrugated or perforated straps not less than 2 inches wide by 10 inches long; or wire anchors not less than 0.177 inch thick.
2. Stud Wall Type: Designed to engage stud and not less than 0.042 inch thick.
3. Compression Type for Drywall Slip-on (Knock-Down) Frames: Adjustable compression anchors.

B. Floor Anchors: Floor anchors to be provided at each jamb, formed from A60 metallic coated material, not less than 0.042 inches thick.

C. Mortar Guards: Formed from same material as frames, not less than 0.016 inches thick.

2.6 HOLLOW METAL PANELS

A. Provide hollow metal panels of same materials, construction, and finish as specified for adjoining hollow metal components.

2.7 LOUVERS

A. Metal Louvers: Door manufacturer's standard metal louvers unless otherwise indicated.

1. Blade Type: Vision proof inverted V or inverted Y.
2. Metal and Finish: Galvanized steel, 0.040 inch thick, factory primed for paint finish with baked enamel or powder coated finish. Match pre-finished door paint color where applicable.

B. Louvers for Fire Rated Doors: Metal louvers with fusible link and closing device, listed and labeled for use in doors with fire protection rating of 1-1/2 hours and less.

1. Manufacturers: Subject to compliance with requirements, provide door manufacturers standard louver to meet rating indicated.
2. Metal and Finish: Galvanized steel, 0.040 inch thick, factory primed for paint finish with baked enamel or powder coated finish. Match pre-finished door paint color where applicable.

2.8 LIGHT OPENINGS AND GLAZING

A. Stops and Moldings: Provide stops and moldings around glazed lites where indicated. Form corners of stops and moldings with butted or mitered hairline joints at fabricator's shop. Fixed and removable stops to allow multiple glazed lites each to be removed independently. Coordinate frame rabbet widths between fixed and removable stops with the type of glazing and installation indicated.

B. Moldings for Glazed Lites in Doors and Loose Stops for Glazed Lites in Frames: Minimum 20 gauge thick, fabricated from same material as door face sheet in which they are installed.

C. Fixed Frame Moldings: Formed integral with hollow metal frames, a minimum of 5/8 inch (16 mm) high unless otherwise indicated. Provide fixed frame moldings and stops on outside of exterior and on secure side of interior doors and frames.

D. Preformed Metal Frames for Light Openings: Manufacturer's standard frame formed of 0.048-inch-thick, cold rolled steel sheet; with baked enamel or powder coated finish; and approved for use in doors of fire protection rating indicated. Match pre-finished door paint color where applicable.

2.9 ACCESSORIES

A. Mullions and Transom Bars: Join to adjacent members by welding or rigid mechanical anchors.

B. Grout Guards: Formed from same material as frames, not less than 0.016 inches thick.

2.10 FABRICATION

A. Fabricate hollow metal work to be rigid and free of defects, warp, or buckle. Accurately form metal to required sizes and profiles, with minimum radius for thickness of metal. Where practical, fit and assemble units in manufacturer's plant. When shipping limitations so dictate, frames for large openings are to be fabricated in sections for splicing or splining in the field by others.

B. Tolerances: Fabricate hollow metal work to tolerances indicated in ANSI/SDI A250.8.

C. Hollow Metal Doors:

1. Exterior Doors: Provide optional weep-hole openings in bottom of exterior doors to permit moisture to escape where specified.
2. Glazed Lites: Factory cut openings in doors with applied trim or kits to fit. Factory install glazing where indicated.
3. Astragals: Provide overlapping astragals as noted in door hardware sets in Division 08 Section "Door Hardware" on one leaf of pairs of doors where required by NFPA 80 for fire-performance rating or where indicated. Extend minimum 3/4 inch beyond edge of door on which astragal is mounted.

4. Continuous Hinge Reinforcement: Provide welded continuous 12 gauge strap for continuous hinges specified in hardware sets in Division 08 Section "Door Hardware".

D. Hollow Metal Frames:

1. Shipping Limitations: Where frames are fabricated in sections due to shipping or handling limitations, provide alignment plates or angles at each joint, fabricated of same thickness metal as frames.
2. Welded Frames: Weld flush face joints continuously; grind, fill, dress, and make smooth, flush, and invisible.

    a. Welded frames are to be provided with two steel spreaders temporarily attached to the bottom of both jambs to serve as a brace during shipping and handling. Spreader bars are for bracing only and are not to be used to size the frame opening.

3. Sidelight and Transom Bar Frames: Provide closed tubular members with no visible face seams or joints, fabricated from same material as door frame. Fasten members at crossings and to jambs by butt welding.
4. High Frequency Hinge Reinforcement: Provide high frequency hinge reinforcements at door openings 48-inches and wider with mortise butt type hinges at top hinge locations.
5. Continuous Hinge Reinforcement: Provide welded continuous 12 gauge straps for continuous hinges specified in hardware sets in Division 08 Section "Door Hardware".
6. Provide countersunk, flat- or oval-head exposed screws and bolts for exposed fasteners unless otherwise indicated for removable stops, provide security screws at exterior locations.
7. Mortar Guards: Provide guard boxes at back of hardware mortises in frames at all hinges and strike preps regardless of grouting requirements.
8. Floor Anchors: Weld anchors to bottom of jambs and mullions with at least four spot welds per anchor.
9. Jamb Anchors: Provide number and spacing of anchors as follows:

    a. Masonry Type: Locate anchors not more than 18 inches from top and bottom of frame. Space anchors not more than 32 inches o.c. and as follows:

        1) Two anchors per jamb up to 60 inches high.
        2) Three anchors per jamb from 60 to 90 inches high.
        3) Four anchors per jamb from 90 to 120 inches high.
        4) Four anchors per jamb plus 1 additional anchor per jamb for each 24 inches or fraction thereof above 120 inches high.

    b. Stud Wall Type: Locate anchors not more than 18 inches from top and bottom of frame. Space anchors not more than 32 inches o.c. and as follows:

        1) Three anchors per jamb up to 60 inches high.
        2) Four anchors per jamb from 60 to 90 inches high.
        3) Five anchors per jamb from 90 to 96 inches high.
        4) Five anchors per jamb plus 1 additional anchor per jamb for each 24 inches or fraction thereof above 96 inches high.
        5) Two anchors per head for frames above 42 inches wide and mounted in metal stud partitions.

10. Door Silencers: Except on weatherstripped or gasketed doors, drill stops to receive door silencers. Silencers to be supplied by frame manufacturer regardless if specified in Division 08 Section "Door Hardware".

E. Hardware Preparation: Factory prepare hollow metal work to receive template mortised hardware; include cutouts, reinforcement, mortising, drilling, and tapping according to the Door Hardware Schedule and templates furnished as specified in Division 08 Section "Door Hardware."

1. Locate hardware as indicated, or if not indicated, according to ANSI/SDI A250.8.
2. Reinforce doors and frames to receive non-template, mortised and surface mounted door hardware.
3. Comply with applicable requirements in ANSI/SDI A250.6 and ANSI/DHI A115 Series specifications for preparation of hollow metal work for hardware.
4. Coordinate locations of conduit and wiring boxes for electrical connections with Division 26 Sections.

2.11 STEEL FINISHES

A. Prime Finishes: Doors and frames to be cleaned, and chemically treated to insure maximum finish paint adhesion. Surfaces of the door and frame exposed to view to receive a factory applied coat of rust inhibiting shop primer.

1. Shop Primer: Manufacturer's standard, fast-curing, lead and chromate free primer complying with ANSI/SDI A250.10 acceptance criteria; recommended by primer manufacturer for substrate; and compatible with substrate and field-applied coatings.

PART 3 - EXECUTION

3.1 EXAMINATION

A. Examine substrates, areas, and conditions, with Installer present, for compliance with requirements for installation tolerances and other conditions affecting performance of the Work.

B. General Contractor to verify the accuracy of dimensions given to the steel door and frame manufacturer for existing openings or existing frames (strike height, hinge spacing, hinge back set, etc.).

C. Proceed with installation only after unsatisfactory conditions have been corrected.

3.2 PREPARATION

A. Remove welded in shipping spreaders installed at factory. Restore exposed finish by grinding, filling, and dressing, as required to make repaired area smooth, flush, and invisible on exposed faces.

B. Prior to installation, adjust and securely brace welded hollow metal frames for square, level, twist, and plumb condition.

C. Tolerances shall comply with SDI-117 "Manufacturing Tolerances Standard Steel Doors and Frames."

D. Drill and tap doors and frames to receive non-template, mortised, and surface-mounted door hardware.

CONFORMED

3.3 INSTALLATION

A. General: Install hollow metal work plumb, rigid, properly aligned, and securely fastened in place; comply with Drawings and manufacturer's written instructions.

B. Hollow Metal Frames: Install hollow metal frames of size and profile indicated. Comply with ANSI/SDI A250.11 and NFPA 80 at fire rated openings.

1. Set frames accurately in position, plumbed, leveled, aligned, and braced securely until permanent anchors are set. After wall construction is complete and frames properly set and secured, remove temporary braces, leaving surfaces smooth and undamaged. Shim as necessary to comply with installation tolerances.
2. Floor Anchors: Provide floor anchors for each jamb and mullion that extends to floor, and secure with post-installed expansion anchors.
3. Masonry Walls: Coordinate installation of frames to allow for solidly filling space between frames and masonry with mortar.
4. Grout Requirements: Do not grout head of frames unless reinforcing has been installed in head of frame. Do not grout vertical or horizontal closed mullion members.

C. Hollow Metal Doors: Fit hollow metal doors accurately in frames, within clearances specified below. Shim as necessary.

1. Non-Fire-Rated Standard Steel Doors:

a. Jambs and Head: 1/8 inch plus or minus 1/16 inch.
b. Between Edges of Pairs of Doors: 1/8 inch plus or minus 1/16 inch.
c. Between Bottom of Door and Top of Threshold: Maximum 3/8 inch.
d. Between Bottom of Door and Top of Finish Floor (No Threshold): Maximum 3/4 inch.

2. Fire-Rated Doors: Install doors with clearances according to NFPA 80.

D. Field Glazing: Comply with installation requirements in Division 08 Section "Glazing" and with hollow metal manufacturer's written instructions.

3.4 ADJUSTING AND CLEANING

A. Final Adjustments: Check and readjust operating hardware items immediately before final inspection. Leave work in complete and proper operating condition. Remove and replace defective work, including hollow metal work that is warped, bowed, or otherwise unacceptable.

B. Remove grout and other bonding material from hollow metal work immediately after installation.

C. Prime-Coat and Painted Finish Touchup: Immediately after erection, sand smooth rusted or damaged areas of prime coat, or painted finishes, and apply touchup of compatible air drying, rust-inhibitive primer, zinc rich primer (exterior and galvanized openings) or finish paint.

END OF SECTION 081113

CONFORMED

SECTION 08 14 23

CLAD WOOD DOORS

PART 1 - GENERAL

1.1 RELATED DOCUMENTS

A. Drawings and general provisions of the Contract, including General and Supplementary Conditions and Division 1 Specification Sections, apply to this Section.

1.2 SUMMARY

A. Section Includes:

1. Flush solid core low pressure clad or decorative laminate doors.
2. Factory fitting clad wood doors to frames and factory machining for hardware.
3. Light frames and glazing installed in clad wood doors.

B. Related Sections:

1. Division 08 Section "Hollow Metal Doors and Frames" .
2. Division 08 Section "Glazing".
3. Division 08 Sections "Door Hardware" and "Access Control Hardware".
4. Division 28 Section "Access Control".

C. Standards and References: Comply with the version year adopted by the Authority Having Jurisdiction.

1. ANSI A208.1 - Particleboard.
2. Intertek Testing Service (ITS Warnock Hersey) - Certification Listings for Fire Doors.
3. NFPA 80 - Standard for Fire Doors and Fire Windows; National Fire Protection Association.
4. NFPA 252 - Standard Methods of Fire Tests of Door Assemblies; National Fire Protection Association.
5. UL 10C - Positive Pressure Fire Tests of Door Assemblies; UL 1784 - Standard for Air Leakage Tests of Door Assemblies.
6. United States Green Building Council (USGBC).
7. Window and Door Manufacturers Association - WDMA I.S.1-A Architectural Wood Flush Doors.

1.3 SUBMITTALS

A. Product Data: For each type of door indicated. Include details of core and edge construction, louvers, trim for openings, and WDMA I.S.1-A classifications.

B. Shop Drawings shall include:

1. Indicate location, size, and hand of each door.
2. Indicate dimensions and locations of mortises and holes for hardware.
3. Indicate dimensions and locations of cutouts.
4. Indicate requirements for veneer matching.
5. Indicate location and extent of hardware blocking.
6. Indicate construction details not covered in Product Data.
7. Indicate doors to be factory finished and finish requirements.
8. Indicate fire protection ratings for fire rated doors.

C. LEED Submittals:

1. Product Data for Credit MR 4: For products having recycled content, documentation indicating percentages by weight of postconsumer and preconsumer recycled content.

    a. Include statement indicating cost for each product having recycled content.
2. Product Data for Credit IEQ 4.4: For adhesives and composite wood products, documentation indicating that product contains no added urea formaldehyde.

D. Samples for Initial Selection: For decorative laminate door faces.

1. Decorative laminate, 8 by 10 inches, for each color and pattern selected.
2. Corner sections of doors, 12 x 12 inches, with door faces and edges representing actual materials to be used.
3. Frames for light openings, 6 inches long, for each material, type, and finish required.

E. Warranty: Sample of manufacturer's warranty.

1.4 QUALITY ASSURANCE

A. Source Limitations: Obtain clad wood doors through one source from a single manufacturer wherever possible.

B. Quality Standard: In addition to requirements specified, comply with WDMA I.S.1-A, latest edition, "Industry Standard for Architectural Wood Flush Doors." and the following minimum values (for particle core doors):

1. NWWDA TM-7 Cycle Slam Test: 1,000,000 cycles.
2. NWWDA TM-8 Hinge Loading Test 1,000 lbs.
3. NWWDA TM-10 Edge Screw Holding Test 850 lbs.
4. NWWDA TM-10 Face Screw Holding Test 650 lbs.

C. Fire Rated Wood Doors: Doors complying with NFPA 80 that are listed and labeled by a testing and inspecting agency acceptable to authorities having jurisdiction, for fire ratings indicated, based on testing at positive pressure according to NFPA 252 (neutral pressure at 40" above sill) or UL 10C.

1. Oversize Fire Rated Door Assemblies: For units exceeding sizes of tested assemblies provide manufacturer's construction label, indicating compliance to independent 3rd party certification agency's procedure, except for size.
2. Temperature Rise Limit: Where indicated and at vertical exit enclosures (stairwell openings) and exit passageways, provide doors that have a maximum transmitted temperature end point of not more than 450 deg F (250 deg C) above ambient after 30 minutes of standard fire test exposure.
3. Smoke Control Door Assemblies: Comply with NFPA 105.

    1) Smoke "S" Label: Doors to bear "S" label, and include smoke and draft control gasketing applied to frame and on meeting stiles of pair doors.

D. Security Rating for Particle Core Doors: ASTM F 476, Grade 40.

E. Pre-Submittal Conference: Conduct conference in compliance with requirements in Division 01 Section "Project Meetings" with attendance by representatives of Supplier, Installer, and Contractor to review proper methods and procedures for receiving, handling, and installing clad wood doors.

1.5 DELIVERY, STORAGE, AND HANDLING

A. Comply with requirements of referenced standard and manufacturer's written instructions.

B. Package clad wood doors individually in plastic bags and wrap bundles of doors in plastic sheeting.

C. Mark each door on top rail with opening number used on Shop Drawings.

1.6 PROJECT CONDITIONS

A. Environmental Limitations: Do not deliver or install doors until spaces are enclosed and weathertight, wet work in spaces is complete and dry, and HVAC system is operating and maintaining ambient temperature and humidity conditions at occupancy levels during the remainder of the construction period.

1.7 WARRANTY

A. Warranty: Manufacturer's standard form in which manufacturer agrees to repair or replace doors that fail in materials or workmanship within the specified warranty period.

1. Failures include, but are not limited to, the following:

a. Warping (bow, cup, or twist) more than 1/4 inch in a 42-by-84-inch section.
b. Telegraphing of core construction in wood face veneers exceeding 0.01 inch in a 3-inch span.

2. Warranty includes installation that may be required due to repair or replacement of defective doors.
3. Warranty Period for Solid Core Interior Doors: Life of installation according to manufacturer's written warranty.

PART 2 - PRODUCTS

2.1 DOOR CONSTRUCTION, GENERAL

A. WDMA I.S.1-A Performance Grade: Extra Heavy Duty; Aesthetic Grade: Premium.

B. Particleboard Core Doors:

1. Particleboard: ANSI A208.1, Grade M-2.
2. Wood Stiles and Rails: As required to meet Extra Heavy Duty Performance level.
3. Blocking: As required to meet Extra Heavy Duty Performance level.

2.2 LOW PRESSURE DECORATIVE LAMINATE (LPDL) FACED DOORS

A. Manufacturers: Subject to compliance with requirements, provide products by one of the following:

1. The Maiman Company – Thermal Fused.
2. Substitutions – Per Division 1

B. Low Pressure Decorative Laminate (LPDL) Thermal Fused Faces:

1. Low pressure decorative laminates faces thermally fused to cores under heat and pressure, complying with Laminating Materials Association’s Product Standard and Typical Physical Properties of Decorative Overlays. LMA.2003.

2. Color or Wood Grain Pattern:

a. ~~Lamin-Art - #3061-VT “Italian Cheery” Velva-Tex finish~~
Wood grain laminate color/pattern shall be selected from manufacturers standard catalogue. (*ADDENDUM 2*)

C. Exposed Edges: Impact resistant polymer edging, minimum .040” thick, applied to all four edges after faces.

D. Polymer Edging Color or Wood Grain Pattern: Manufacturer's standard color that most closely matches faces.

E. Provide doors with pilot holes factory drilled for vertical edge hinges and lock sets.

F. Where continuous hinges are specified, provide coarse thread particle board screws designed for use in dense wood.

2.3 BLOCKING

A. Fire Rated Doors:

1. Provide blocking as indicated below:

a. HB1: 5 inch in doors indicated to have closers and overhead stops.

2.4 LOUVERS

A. Metal Louvers: Door manufacturer's standard metal louvers unless otherwise indicated.

1. Blade Type: Vision proof inverted V or inverted Y.
2. Metal and Finish: Galvanized steel, 0.040 inch thick, factory primed for paint finish with baked enamel or powder coated finish.

2.5 LIGHT FRAMES AND GLAZING

A. Wood Beads for Light Openings in Wood Doors up to and including 20-minute rating:

1. Wood Species: Same species as door faces.
2. Profile:
   a. M1 Flush Bead.
   b. At wood core doors with 20-minute fire protection ratings, provide wood beads and metal glazing clips approved for such use.

B. Metal Frames for Light Openings in Fire Rated Doors over 20-minute Rating: Manufacturer's standard frame formed of 0.048-inch-thick, cold rolled steel sheet; with baked enamel or powder coated finish; and approved for use in doors of fire protection rating indicated.

1. Manufacturers:

a. Air Louver.
b. All Metal Stamping.
c. Anemostat.
d. Pemko.

C. Glazing: Comply with installation requirements in Division 08 Section "Glazing" and with the flush wood door manufacturer's written instructions.

CONFORMED

2.6 FABRICATION

A. Factory fit doors to suit frame opening sizes indicated. Comply with clearance requirements of referenced quality standard for fitting unless otherwise indicated.

1. Comply with requirements in NFPA 80 for fire rated doors.

B. Factory machine doors for hardware that is not surface applied. Comply with final hardware schedules, door frame Shop Drawings, DHI A115-W series standards, and hardware templates.

1. Coordinate with hardware mortises in metal frames to verify dimensions and alignment before factory machining.
2. Metal Astragals: Factory machine astragals and formed steel edges for hardware for pairs of fire rated doors.

C. Openings: Cut and trim openings through doors in factory.

1. Light Openings: Trim openings with moldings of material and profile indicated.
2. Glazing: Comply with applicable requirements in Division 08 Section "Glazing."
3. Louvers: Factory install louvers in prepared openings.

PART 3 - EXECUTION

3.1 EXAMINATION

A. Examine doors and installed door frames before hanging doors.

1. Verify that frames comply with indicated requirements for type, size, location, and swing characteristics and have been installed with level heads and plumb jambs.
2. Reject doors with defects.

B. Proceed with installation only after unsatisfactory conditions have been corrected.

3.2 INSTALLATION

A. Hardware: For installation, see Division 8 Section "Door Hardware."

B. Installation Instructions: Install doors to comply with manufacturer's written instructions and the referenced quality standard, and as indicated.

1. Install fire rated doors in corresponding fire rated frames according to NFPA 80.

C. Factory Fitted Doors: Align in frames for uniform clearance at each edge.

D. Field modifications to doors shall not be permitted, except those specifically allowed by manufacturer or fire rating requirements.

3.3 ADJUSTING

A. Operation: Re-hang or replace doors that do not swing or operate freely.

B. Replace doors that do not comply with requirements. Doors may be repaired if work complies with requirements and shows no evidence of repair or refinishing.

CONFORMED

END OF SECTION 081423

CONFORMED

SECTION 08 41 13

ALUMINUM STOREFRONTS

PART 1 - GENERAL

1.01 SUMMARY

1. Related Documents: Conditions of the Contract, Division 1 - General Requirements, and Drawings apply to Work of this Section.

B. Section Includes:
   1. Storefront system, complete with reinforcing, fasteners, anchors, and attachment devices.
   2. Accessories necessary to complete work.

C. Products Furnished But Not Installed Under This Section:
   1. Anchoring devices which are cast in concrete.

D. Related Sections:
   1. Section 01430 - Mock-ups.
   2. Section 05500 Metal Fabrications.
   3. Section 06100 Rough Carpentry.
   4. Section 07900 - Joint Sealers.
   5. Section 08450 All Glass Entrances.
   9. Section 08710 - Door Hardware.
   10. Section 08810 - Glass and Glazing.

1.02 REFERENCES

A. Aluminum Association (AA):
   1. DAF-45 Designation System for Aluminum Finishes.

B. American Architectural Manufacturers Association (AAMA):
   1. 501 Methods of Test for Exterior Walls.
   2. 501.2 Quality Assurance and Diagnostic Water Leakage Field Check of Installed Storefronts, Curtain Walls, and Sloped Glazing Systems.
   3. 2605 Voluntary Specification, Performance Requirements and Test Procedures for Superior Performing Organic Coatings on Aluminum Extrusions and Panels.
   4. 611 Voluntary Specification for Anodized Architectural Aluminum.
   5. 701 Voluntary Specifications for Pile Weatherstripping and Replaceable Fenestration Weatherseals.
   6. CW-10 Care and Handling of Architectural Aluminum From Shop to Site.
   7. SFM1 Aluminum Storefront and Entrance Manual.

C. American Society for Testing and Materials (ASTM):
   1. A36 Structural Steel.
   2. A123 Zinc (Hot-Dip Galvanized) Coatings on Iron and Steel Products.
   3. B209 Aluminum and Aluminum - Alloy Sheet and Plate.
   4. B221 Aluminum-Alloy Extruded Bars, Rods, Wire, Shapes, and Tubes.
   5. E283 Test Method for Rate of Air Leakage Through Exterior Windows, Curtain Walls and Doors.
   6. E330 Test Method for Structural Performance of Exterior Windows, Curtain Walls and Doors by Uniform Static Air Pressure Difference.
   7. E331 Test Method for Water Penetration of Exterior Windows, Curtain Walls and Doors by Uniform Static Air Pressure Difference.

D. Glass Association of North America (GANA):

1. Glazing Manual

E. Federal Specifications (FS):
1. TT-P-641G(1) Primer Coating, Zinc Dust-Zinc Oxide (For Galvanized Surfaces).
2. TT-P-645A Primer, Paint, Zinc Chromate, Alkyd Type.

F. Steel Structures Painting Council (SSPC):
1. Cold-Applied Asphalt Mastic (Extra Thick Film).

1.03 SYSTEM REQUIREMENTS

A. Design Requirements:
1. Drawings are diagrammatic and do not purport to identify nor solve problems of thermal or structural movement, glazing, anchorage, or moisture disposal.
2. Requirements shown by details are intended to establish basic dimension of units, sight lines and profiles of members.
3. Provide concealed fastening.
4. Provide entrance and storefront systems, including necessary modifications, to meet specified requirements and maintaining visual design concepts.
5. Attachment considerations are to take into account site peculiarities and expansion and contraction movements so there is no possibility of loosening, weakening or fracturing connection between units and building structure or between units themselves.
6. Provide for expansion and contraction due to structural movement without detriment to appearance or performance.
7. Framing systems shall accommodate expansion and contraction movement due to surface temperature differentials of 180 degrees F without causing buckling, stress on glass, failure of joint seals, excessive stress on structural elements, reduction of performance, or other detrimental effects.

B. Performance Requirements:
1. Wind loads: Provide framing system capable of withstanding design wind load of 115 MPH and exposure category C. The design wind loads are based on the 2013 California Building Code.
2. Air infiltration: Air leakage through fixed light areas of storefront shall not exceed 0.06 cfm per square foot of surface area when tested in accordance with ASTM E283 at differential static pressure of 6.24 psf.
3. Water infiltration: No uncontrolled leakage when tested in accordance with ASTM E331 at test pressure of 10 psf as defined in AAMA 501.
4. Deflection:
Limit maximum deflection of any framing member in direction normal to plane of wall when subjected to specified design loads to less than the amounts specified by storefront and glazing manufacturer.

C. Testing Requirements: Provide components that have been previously tested by an independent testing laboratory.

1.04 SUBMITTALS

A. General: Submit in accordance with Division 01 General Requirements

B. Product Data:
1. Submit manufacturer's descriptive literature and product specifications.
2. Include information for factory finishes, hardware, accessories, and other required components.

C. Shop Drawings:
1. Submit shop drawings covering fabrication, installation and finish of specified systems.
2. Include following:
a. Fully dimensioned plans and elevations with detail coordination keys.
b. Locations of exposed fasteners and joints.

3. Provide detailed drawings of:
   a. Composite members.
   b. Joint connections for framing systems and for entrance doors.
   c. Anchorage.
   d. System reinforcements.
   e. System expansion and contraction provisions.
   f. Glazing methods and accessories.
   g. Internal sealant requirements.
4. Schedule of finishes.

D. Samples:
1. Submit manufacturers standard samples indicating quality of finish.
2. Where normal texture or color variations are expected, include additional samples illustrating range of variation.
3. Submit samples for each type of glass, 12 x 12 inch size.

E. Test Reports:
1. Standard Systems: Submit certified copies of previous test reports substantiating performance of system in lieu of retesting. Include other supportive data as necessary.

F. Qualification Data:
1. Submit installer qualifications verifying years of experience.
Manufacturer's Instructions: Submit manufacturer's printed installation instructions.

1.05 QUALITY ASSURANCE

A. Single Source Responsibility:

1. To ensure quality of appearance and performance, obtain materials for systems from either a single manufacturer or from manufacturer approved by systems manufacturer.

B. Installer Qualifications: Certified in writing by system manufacturer as qualified for installation of specified systems.

C. Perform Work in accordance with AAMA SFM1 and manufacturer's written instructions.

1.06 DELIVERY, STORAGE, AND HANDLING

A. Comply with requirements of Section 01600.
B. Protect finished surfaces as necessary to prevent damage.
C. Do not use adhesive papers or sprayed coatings that become firmly bonded when exposed to sun.
D. Do not leave coating residue on any surfaces.
E. Replace damaged units.

1.07 WARRANTY

A. Provide warranties in accordance with Section 01700.
B. Provide written warranty in form acceptable to Owner jointly signed by manufacturer, installer and Contractor warranting work to be watertight, free from deflective materials, defective workmanship, glass breakage due to defective design, and agreeing to replace components which fail within 1 year from date of Substantial Completion.
C. Warranty shall cover following:
1. Complete watertight and airtight system installation within specified tolerances.
2. System is structurally sound and free from distortion.

PART 2 - PRODUCTS

2.01 MANUFACTURERS AND PRODUCTS

A. Subject to compliance with requirements indicated, provide products by one of the following:
   1. Oldcastle BuildingEnvelope

B. Substitutions: Per Division 01 – General Requirements

C. Acceptable Storefront Framing Systems:

Exterior and Lobby:
Flush Glazed System, center set, exterior loaded
Series 3000 - 2" x 4 1/2" mullion profile; accommodates 1" glazing.

Interior:
Flush Glazed System, center set, exterior loaded
Series 1000 - 1-3/4" x 4" mullion profile; accommodates 1/4" glazing.

2.02 FRAMING MATERIALS AND ACCESSORIES

A. Aluminum:
   1. ASTM B221, alloy 6063-T5 for extrusions; ASTM B209, alloy 5005-H16 for sheets; or other alloys and temper recommended by manufacturer appropriate for specified finish.

B. Internal Reinforcing:
   1. ASTM A36 for carbon steel.
   2. Shapes and sizes to suit installation.
   3. Steel components factory coated with alkyd type zinc chromate primer complying with FS TT-P-645.

C. Anchorage Devices:
   1. Manufacturer's standard formed or fabricated steel or aluminum assemblies of shapes, plates, bars or tubes.
   2. Hot-dip galvanize steel assemblies after fabrication, comply with ASTM A123, 2.0 ounce minimum coating.

D. Fasteners:
   1. Aluminum, non-magnetic stainless steel or other non-corrosive materials compatible with items being fastened.
   2. Provide concealed fasteners wherever possible.
   3. For exposed locations, provide Phillips flathead screws with finish matching item fastened.
   4. For concealed locations, provide manufacturer's standard fasteners.

E. Expansion Anchor Devices: Lead-shield or toothed-steel, drilled-in, expansion bolt anchors.

F. Protective Coatings: Cold-applied asphalt mastic complying with SSPC, compounded for 30 mil thickness for each coat; or alkyd type zinc chromate primer complying with FS TT-P-645.

G. Touch-Up Primer for Galvanized Compone nts: Zinc oxide conforming with FS TT-P-641.

H. Glazing Gaskets:
   1. Compression type design, replaceable, molded or extruded, of neoprene, polyvinyl chloride (PVC), or ethylene propylene diene monomer (EPDM).
   2. Profile and hardness as required to maintain uniform pressure for watertight seal.

I. Weatherstripping:
   1. Wool pile conforming to AAMA 701.2.
   2. Provide EPDM or vinylblade gasket weatherstripping in bottom door rail, adjustable for contact with threshold.

J. Internal Sealants and Baffles.

2.03 GLASS AND GLAZING ACCESSORIES

A. Refer to Section 088100.

2.04 FABRICATION

A. Coordination of Fabrication:
   1. Check actual frame or door openings required in construction work by accurate field measurements before fabrication.
   2. Fabricate units to withstand loads that will be applied when system is in place.
B. General
   1. Conceal fasteners wherever possible.
   2. Reinforce work as necessary for performance requirements, and for support to structure.
   3. Separate dissimilar metals and aluminum in contact with concrete utilizing protective coating or preformed separators, which will prevent contact and corrosion.
   4. Comply with Section 08810 for glazing requirements.

C. Aluminum Framing:
   1. Provide members of size, shape and profile indicated, designed to provide for glazing from exterior.
   2. Fabricate frame assemblies with joints straight and tight fitting.
   3. Reinforce internally with structural members as necessary to support design loads.
   4. Maintain accurate relation of planes and angles, with hairline fit of contacting members.
   5. Seal horizontals and direct moisture accumulation to exterior.
   6. Provide flashings and other materials used internally or externally that are corrosive resistant, non-staining, non-bleeding and compatible with adjoining materials.
   7. Provide manufacturer's extrusions and accessories to accommodate expansion and contraction due to temperature changes without detrimental to appearance or performance.
D. Welding:
   1. Comply with recommendations of the American Welding Society.
   2. Use recommended electrodes and methods to avoid distortion and discoloration.
   3. Grind exposed welds smooth and flush with adjacent surfaces; restore mechanical finish.
E. Flashings: Form from sheet aluminum with same finish as extruded sections. Apply finish after fabrication. Material thickness as required to suit condition without deflection or "oil-canning".

2.05 FINISHES

A. Clear Anodized:
   1. Conforming to AA-M12C22A31 and AAMA 611.
   2. Architectural Class II, etched, medium matte, clear anodic coating, 0.4 mil minimum thickness.

PART 3 - EXECUTION

3.01 EXAMINATION
A. Examine conditions and proceed with Work in accordance with Section 01400.

3.02 INSTALLATION
A. Erection Tolerances:
   1. Limit variations from plumb and level:
      a. 1/8 inch in 10'-0" vertically.
      b. 1/8 inch in 20'-0" horizontally.
   2. Limit variations from theoretical locations: 1/4 inch for any member at any location.
   3. Limit offsets in theoretical end-to-end and edge-to-edge alignment: 1/16 inch from flush surfaces not more than 2 inches apart or out-of-flush by more than 1/4 inch.
B. Install doors and hardware in accordance with manufacturer's printed instructions.
C. Set units plumb, level and true to line, without warp or rack of frame.
D. Anchor securely in place, allowing for required movement, including expansion and contraction.

E. Separate dissimilar materials at contact points, including metal in contact with masonry or concrete surfaces, with bituminous paint or preformed separators to prevent contact and corrosion.
F. Set sill members in bed of sealant. Set other members with internal sealants and baffles to provide weather-tight construction.
G. Coordinate installation of perimeter sealant and backing materials between assemblies and adjacent construction in accordance with requirements of Section 07920.
H. Glazing: Refer to requirements of Section 08810.

3.03 ADJUSTING

A. Test door operating functions. Adjust closing and latching speeds and other hardware in accordance with manufacturer's instructions to ensure smooth operation.

3.04 CLEANING

A. Clean surfaces in compliance with manufacturer's recommendations; remove excess mastic, mastic smears, foreign materials and other unsightly marks.
B. Clean metal surfaces exercising care to avoid damage.

END OF SECTION

CONFORMED

SECTION 08 56 53

SERVICE WINDOWS

PART 1 GENERAL

1.1 SUMMARY

A. Section Includes:
1. Interior service window units.
2. Glazing.

B. Related Sections:
1. Section 06-10-00; Rough Carpentry
2. Section 07-92-00: Joint Sealers
3. Section 08-41-13: _Aluminum Storefronts
4. Section 09-29-00 - Gypsum Board

1.2 REFERENCES

A. American Architectural Manufacturers Association:
1. AAMA 611 - Voluntary Specification for Anodized Architectural Aluminum.
2. AAMA 2603 - Voluntary Specification, Performance Requirements and Test Procedures for Pigmented Organic Coatings on Aluminum Extrusions and Panels.

B. American Society Mechanical Engineers Standards:
1. ASME SA-240/SA-240M - Specification for Chromium and Chromium-Nickel Stainless Steel Plate, Sheet, and Strip for Pressure Vessels and for General Applications.

C. ASTM International:
1. ASTM A27/A27M - Standard Specification for Steel Castings, Carbon, for General Application.
2. ASTM A 36/A 36M. - Standard Specification for Carbon Structural Steel.
3. ASTM A47/A47M - Standard Specification for Ferritic Malleable Iron Castings.
4. ASTM A123/A123M - Standard Specification for Zinc (Hot-Dip Galvanized) Coatings on Iron and Steel Products.
5. ASTM A153/A153M - Standard Specification for Zinc Coating (Hot-Dip) on Iron and Steel Hardware.
6. ASTM A307 - Standard Specification for Carbon Steel Bolts and Studs, 60 000 PSI Tensile Strength.
7. ASTM A 653/A 653M - Standard Specification for Steel Sheet, Zinc-Coated (Galvanized) or Zinc-Iron Alloy-Coated (Galvannealed) by the Hot-Dip Process.
8. ASTM A666 - Standard Specification for Annealed or Cold-Worked Austenitic Stainless Steel Sheet, Strip, Plate, and Flat Bar.
9. ASTM B221/B221M - Standard Specification for Aluminum and Aluminum-Alloy Extruded Bars, Rods, Wire, Profiles, and Tubes.
10. ASTM C1036 - Standard Specification for Flat Glass.
11. ASTM C1048 - Standard Specification for Heat-Treated Flat Glass-Kind HS, Kind FT Coated and Uncoated Glass.
12. ASTM D790 - Standard Test Methods for Flexural Properties of Unreinforced and Reinforced Plastics and Electrical Insulating Materials.

CONFORMED

13. ASTM D1929 - Standard Test Method for Determining Ignition Temperature of Plastics.
14. ASTM E488 - Standard Test Methods for Strength of Anchors in Concrete and Masonry Elements.
15. ASTM E699 - Standard Practice for Evaluation of Agencies Involved in Testing, Quality Assurance, and Evaluating of Building Components.
16. ASTM E2190 - Standard Specification for Insulating Glass Unit Performance and Evaluation.
17. ASTM F588 - Standard Test Methods for Resistance of Window Assemblies to Forced Entry Excluding Glazing.
18. ASTM F2329 - Standard Specification for Zinc Coating, Hot-Dip, Requirements for Application to Carbon and Alloy Steel Bolts, Screws, Washers, Nuts, and Special Threaded Fasteners.

D. California Model Building Security Ordinance:
1. CMBSO - Section 15.52.100, Tests CAWM 301-90, Forced Entry Resistance Tests for Windows.

E. Consumer Products Safety Commission:
1. CPSC 16 CFR 1201 - Safety Standard for Architectural Glazing.

F. CSA International - Canadian Standards Association:
1. CAN/CSA C22.2 No. 68-92 - Motor-Operated Appliances (Household and Commercial).
2. CAN/CSA C22.2 No. 247- Operators and Systems of Doors, Gates, Draperies and Louvers.

G. DuPont Powder Coating Test Method:
1. DPC TM 10.219 - PCI Powder Smoothness.

H. Florida Building Code:
1. Static Air Pressure Test.

I. H.P. White Laboratory, Inc.:
1. HPW-TP0500.01:
   a. Level V.
   b. Level C Ballistics (.44 magnum).
2. HPW-TP-0500.02 - Level B Ballistics (9mm).

J. National Association of Architectural Metal Manufacturers.
1. NAAMM No. 3 Finish: Ground unidirectional uniform finish obtained with 80 - 100 grit abrasive.

K. SAE International:
1. AMS5511 - Steel, Corrosion-Resistant, Sheet, Strip, and Plate, 19Cr - 9.5Ni (304L), Solution Heat Treated.
2. AMS5513 - Steel, Corrosion-Resistant, Sheet, Strip, and Plate 19cr 9.2Ni (SAE 30304) Solution Heat Treated.

L. Steel Structures Painting Council:
1. SSPC Paint 20 - Zinc-Rich Primers (Type I - Inorganic and Type II - Organic).

1.3 PERFORMANCE REQUIREMENTS

CONFORMED

1.4 SUBMITTALS

A. See Division 01 General Requirements for additional submittal requirements.

B. Shop Drawings:
1. Indicate configuration, sizes, rough-in, mounting, construction and glazing details as well as installation clearances and finishes.

C. Product Data:
1. Submit manufacturer's product data for specified Products indicating materials, operation characteristics, and finishes.

D. Samples:
1. Submit two samples, 4 x 4 inches (100 x 100 mm) in size illustrating metal finishes for each finish specified.

E. Test Reports:
1. [Indicate compliance with specified bullet resistance performance.]

F. Manufacturer's Installation Instructions:
1. Submit installation instructions with requirements to accommodate specific site conditions.

1.5 QUALITY ASSURANCE

1.6 QUALIFICATIONS

A. Manufacturer: Company specializing in manufacturing Products specified in this section with minimum 10 years documented experience.

B. Installer: Company specializing in installation of window systems specified with minimum three years documented experience.

C. Testing Agency Qualifications:
1. Qualified according to ASTM E699 and experienced in [ballistics-] [and] [forced-entry-] resistance testing.

1.7 DELIVERY, STORAGE, AND PROTECTION

A. Section 01 60 00 - Product Requirements {01600 - Product Requirements}: Requirements for transporting, handling, storing, and protecting products.

B. Ordering: To avoid construction delays comply with ordering instructions and lead time requirements as set by window system manufacturer.

C. Pack window units in manufacturer's standard shipping containers and protective packaging. Deliver units in manufacturer's original packaging and unopened containers with identification labels intact.

D. Store window units and accessories on raised blocks to prevent moisture damage protected from exposure to weather and vandalism.

1.8 FIELD MEASUREMENTS

A. Verify field measurements prior to fabrication.

1.9 COORDINATION

A. Division 01 – General Requirements

B. Coordinate work with adjacent materials specified in other Sections and as indicated on Drawings and approved shop drawings.

1.10 WARRANTY

A. Furnish manufacturer's standard warranty document, executed by an authorized Quikserv Corp. officer in which manufacturer agrees to repair or replace windows, drawers and air curtains that fail in materials or workmanship within specified warranty period. This warranty is in addition to, and not a limitation of other rights Owner has under the contract.
   1. Warranty Period:
      a. One year parts and labor from date of installation.
   2. Failures include, but are not limited to, the following:
      a. Deterioration of metals, metal finishes, and other materials beyond normal weathering and use.
      b. Structural failures including deflections exceeding 1/4 inch.
      c. Failure of welds.
      d. Excessive air leakage.
      e. Faulty operation of sliding window hardware.
      f. Faulty operation of transaction drawers.
      g. Faulty operation of air curtains.

PART 2 PRODUCTS

2.1 MATERIALS

A. Aluminum Extrusions: ASTM B221/B221M. Provide alloy and temper recommended by manufacturer for strength, corrosion resistance, and application of required finish, but not less than 22,000-psi (150-MPa) ultimate tensile strength and not less than 0.125 inch (3.2 mm) thick at any location for main frame and sash members.

B. Steel Plates, Shapes, and Bars: ASTM A36/A36M.

C. Metallic-Coated Steel Sheet:
   1. ASTM A653/A653M, CS (Commercial Steel), Type B; with G90 (Z275)zinc (galvanized) coating designation.
   2. AMS5511, steel, corrosion-resistant, sheet, strip, and plate, 19Cr - 9.5Ni (304L), solution heat treated.
   3. AMS5513, steel, corrosion-resistant, sheet, strip, and plate 19cr 9.2Ni (SAE 30304) solution heat treated.

D. Stainless-Steel Sheet, Strip, Plate, and Flat Bars:
   1. ASTM A666, austenitic stainless steel, Type 304, stretcher-leveled standard of flatness.

CONFORMED

2. ASME SA-240/SA-240M, chromium and chromium-nickel stainless steel plate, sheet, and strip for general applications..

E. Concealed Bolts: ASTM A307, Grade A unless otherwise indicated.

F. Embedded Plate Anchors: Fabricated from steel shapes and plates, minimum 3/16 inch (4.8 mm) thick; with minimum 1/2-inch- (12.7-mm-) diameter, headed studs welded to back of plate..

G. Welding Rods and Bare Electrodes: Select according to AWS specifications for metal alloy welded.

H. Sealants: For sealants required within fabricated security windows, provide type recommended by manufacturer for joint size and movement. Sealant shall remain permanently elastic, nonshrinking, and nonmigrating.

I. Gaskets: For gaskets required within fabricated security windows, provide type recommended by manufacturer for joint size and movement. Gaskets shall remain permanently elastic, nonshrinking, and nonmigrating.

2.2 WINDOW COMPONENTS

A. Comply with requirements of UL listing for ballistics-resistance levels as specified.

B. Glass:
1. Tempered Glass: 1/4 inch thick.

C. Miscellaneous Glazing Materials: Provide material, size, and shape complying with requirements of glass manufacturers, and with a proven record of compatibility with surfaces contacted in installation:
1. Cleaners, Primers, and Sealers: Type recommended by sealant or gasket manufacturer.
2. Setting Blocks: Elastomeric material with a Type A Shore durometer hardness of 85, plus or minus 5.
3. Spacers: Elastomeric blocks or continuous extrusions with a Type A Shore durometer hardness required by glass manufacturer to maintain glass lites in place for installation indicated.
4. Edge Blocks: Elastomeric material of hardness needed to limit glass lateral movement (side walking).

D. Flashing.

E. Welding Materials.

F. Anchors, Clips, and Window Accessories: Stainless steel; hot-dip, zinc-coated steel or iron, of sufficient strength to withstand design pressure indicated.
a. Model T1 – Custom Size
1) Rough Opening: Custom size as indicated on Drawings plus 3/8 inch on all sides.
2) Glazing:
a) 1/4 inch tempered
3) Finish: Clear Anodized Aluminum

CONFORMED

2.3 GLAZING

A. Float Glass Materials:
   1. Tempered Glass: ASTM C1048, Type 1 transparent flat, Quality Q3, Kind FT fully tempered, Condition A uncoated, float glass with horizontal tempering.
      a. Fabricate tempered glass with roller-wave distortion parallel to bottom edge of glass as installed.
      b. Furnish tempered glass conforming to CPSC 16 CFR 1201 Category II.

B. Clear Glass: Annealed and Tempered float glass as specified; Class 1 clear.
   1. Clear tempered glass (FG-CT).
   2. Minimum Thickness: 1/4 inch.

2.4 FABRICATION

A. Fabricate window to dimensions indicated on Drawings.

B. Fabricate windows, and accessories to provide a complete system for assembly of components and anchorage of window, drawers and accessories.
   1. Provide units that are reglazable from the secure side without dismantling the nonsecure side of framing.
   2. Prepare security windows for glazing unless preglazing at the factory is indicated.

C. Provide weep holes and internal water passages for exterior security windows to conduct infiltrating water to the exterior.

D. Rigidly fit and secure joints and corners with internal reinforcement. Make joints and connections flush, hairline, and weatherproof. Fully weld corners.
   1. Fabricate framing with manufacturer's standard, internal opaque armoring in thicknesses required for security windows to comply with ballistics-resistance performance indicated.

E. Prepare components with reinforcement required for hardware.

F. Welding: To greatest extent possible, weld before finishing and in concealed locations to minimize distortion or discoloration of finish. Remove weld spatter and welding oxides from exposed surfaces by descaling or grinding.

G. Metal Protection: Separate dissimilar metals to protect against galvanic action by painting contact surfaces with primer or by applying sealant or tape recommended by manufacturer for this purpose.

H. Factory-cut openings in glazing for speaking apertures.

I. Preglazed Fabrication: Preglaze window units at factory, where required for applications indicated.

J. Weather Stripping: Factory applied.

K. Bottom Sills: Stainless steel construction, no bottom tracks and no pop rivets.

L. Handles: Stainless steel, manufacturer's standard profile and finish.

CONFORMED

2.5 SHOP FINISHING

A. Aluminum Finishes:
   1. Clear Anodized Aluminum Surfaces: AA-M10C22A31 non-specular as fabricated mechanical finish, medium matte chemical finish, and Architectural Class II 0.7 mils (0.018 mm) clear anodized coating.
      a. Conform to AAMA 611

B. Stainless Steel: 304 Stainless Steel with NAAMM No. 3 finish.

C. Apply bituminous paint to concealed metal surfaces in contact with cementitious or dissimilar materials.

D. Touch-Up Primer for Galvanized Steel Surfaces: SSPC Paint 20 zinc rich.

E. Extent of Finish:
   1. Apply factory coating to all surfaces exposed at completed assemblies.
   2. Apply finish to surfaces cut during fabrication so that no natural aluminum is visible in completed assemblies, including joint edges.
   3. Apply touch-up materials recommended by coating manufacturer for field application to cut ends and minor damage to factory applied finish.

PART 3 EXECUTION

3.1 EXAMINATION

A. Verify existing conditions before starting work

B. Verify construction is ready to receive Products specified in this section.

C. Verify rough openings are correct size and in correct location.

D. Examine roughing-in for embedded and built-in anchors to verify actual locations of security window connections before security window installation.

E. Inspect built-in and cast-in anchor installations, before installing security windows, to verify that anchor installations comply with requirements. Prepare inspection reports.
   1. Remove and replace anchors where inspections indicate that they do not comply with specified requirements. Reinspect after repairs or replacements are made.
   2. Perform additional inspections to determine compliance of replaced or additional work. Prepare anchor inspection reports.

F. For glazing materials whose orientation is critical for performance, verify installation orientation.

G. Proceed with installation only after unsatisfactory conditions have been corrected.

3.2 PREPARATION

A. Furnish frames and anchors to other sections as required for installation in surrounding partition and casework construction.

3.3 INSTALLATION

A. Install Products in accordance with manufacturer's instructions.

B. Align Products plumb, level and square.

C. Rigidly secure Products to adjacent supporting construction.

D. Glaze windows in accordance with manufacturer's instructions

E. Seal perimeter joints in accordance with manufacturer's instructions

F. Connect electrical components to power source.

G. Protection: Where dissimilar metals will contact each other, protect against galvanic action by painting contact surfaces with primer or by applying sealant or tape recommended in writing by manufacturer for this purpose. Where aluminum will contact concrete or masonry, protect against corrosion by painting contact surfaces with bituminous paint.

3.4 ADJUSTING

A. Remove and replace defective work, including security windows that are warped, bowed, or otherwise unacceptable.

3.5 CLEANING AND PROTECTION

A. Remove protective material from factory finished surfaces.

B. Wash surfaces by method recommended and acceptable to sealant and window manufacturer; rinse and wipe surfaces clean.

C. Remove excess sealant by moderate use of mineral spirits or other solvent acceptable to sealant and window manufacturer.

D. Provide temporary protection to ensure that security windows are without damage at time of Substantial Completion.

END OF SECTION

CONFORMED

SECTION 087100

DOOR HARDWARE

PART 1 - GENERAL

1.1 RELATED DOCUMENTS

A. Drawings and general provisions of the Contract, including General and Supplementary Conditions and Division 1 Specification Sections, apply to this Section.

1.2 SUMMARY

A. This Section includes commercial door hardware for the following:

1. Swinging doors.
2. Sliding doors.
3. Other doors to the extent indicated.

B. Door hardware includes, but is not necessarily limited to, the following:

1. Mechanical door hardware.
2. Electromechanical door hardware.
3. Automatic operators.
4. Cylinders specified for doors in other sections.

C. Related Sections:

1. Division 08 Section “Door Hardware Schedule”.
2. Division 08 Section “Hollow Metal Doors and Frames”.
3. Division 08 Section “Interior Aluminum Doors and Frames”.
4. Division 8 Section “Plastic Laminate Faced Wood Doors “.
5. Division 08 Section “Clad Wood Doors”.
6. Division 08 Section “Aluminum-Framed Entrances and Storefronts”.
7. Division 08 Section “Automatic Door Operators”.
8. Division 08 Section “Access Control Hardware”.

D. Codes and References: Comply with the version year adopted by the Authority Having Jurisdiction.

1. ANSI A117.1 - Accessible and Usable Buildings and Facilities.
2. ICC/IBC - International Building Code.
3. NFPA 70 - National Electrical Code.
4. NFPA 80 - Fire Doors and Windows.
5. NFPA 101 - Life Safety Code.
6. NFPA 105 - Installation of Smoke Door Assemblies.
7. UL/ULC and CSA C22.2 – Standards for Automatic Door Operators Used on Fire and Smoke Barrier Doors and Systems of Doors.

8. State Building Codes, Local Amendments.
9. 521 CMR – Massachusetts Architectural Board Regulations.

E. Standards: All hardware specified herein shall comply with the following industry standards:

1. ANSI/BHMA Certified Product Standards - A156 Series
2. UL10C – Positive Pressure Fire Tests of Door Assemblies

1.3 SUBMITTALS

A. Product Data: Manufacturer's product data sheets including installation details, material descriptions, dimensions of individual components and profiles, operational descriptions and finishes.

B. Door Hardware Schedule: Prepared by or under the supervision of supplier, detailing fabrication and assembly of door hardware, as well as procedures and diagrams. Coordinate the final Door Hardware Schedule with doors, frames, and related work to ensure proper size, thickness, hand, function, and finish of door hardware.

1. Format: Comply with scheduling sequence and vertical format in DHI's "Sequence and Format for the Hardware Schedule."

2. Organization: Organize the Door Hardware Schedule into door hardware sets indicating complete designations of every item required for each door or opening. Organize door hardware sets in same order as in the Door Hardware Sets at the end of Part 3. Submittals that do not follow the same format and order as the Door Hardware Sets will be rejected and subject to resubmission.

3. Content: Include the following information:

    a. Type, style, function, size, label, hand, and finish of each door hardware item.
    b. Manufacturer of each item.
    c. Fastenings and other pertinent information.
    d. Location of door hardware set, cross-referenced to Drawings, both on floor plans and in door and frame schedule.
    e. Explanation of abbreviations, symbols, and codes contained in schedule.
    f. Mounting locations for door hardware.
    g. Door and frame sizes and materials.
    h. Warranty information for each product.

4. Submittal Sequence: Submit the final Door Hardware Schedule at earliest possible date, particularly where approval of the Door Hardware Schedule must precede fabrication of other work that is critical in the Project construction schedule. Include Product Data, Samples, Shop Drawings of other work affected by door hardware, and other information essential to the coordinated review of the Door Hardware Schedule.

C. Shop Drawings: Details of electrified access control hardware indicating the following:

1. Wiring Diagrams: Upon receipt of approved schedules, submit detailed system wiring diagrams for power, signaling, monitoring, communication, and control of the access

control system electrified hardware. Differentiate between manufacturer-installed and field-installed wiring. Include the following:

a. Elevation diagram of each unique access controlled opening showing location and interconnection of major system components with respect to their placement in the respective door openings.
b. Complete (risers, point-to-point) access control system block wiring diagrams.
c. Wiring instructions for each electronic component scheduled herein.

2. Electrical Coordination: Coordinate with related sections the voltages and wiring details required at electrically controlled and operated hardware openings.

D. Proof of Certification: Provide copy of manufacturer(s) official certification or accreditation document indicating proof of status as a qualified installer of Windstorm assemblies.

E. Keying Schedule: After a keying meeting with the owner has taken place prepare a separate keying schedule detailing final instructions. Submit the keying schedule in electronic format. Include keying system explanation, door numbers, key set symbols, hardware set numbers and special instructions. Owner must approve submitted keying schedule prior to the ordering of permanent cylinders/cores.

F. Operating and Maintenance Manuals: Provide manufacturers operating and maintenance manuals for each item comprising the complete door hardware installation in quantity as required in Division 01, Closeout Submittals.

1.4 QUALITY ASSURANCE

A. Manufacturers Qualifications: Engage qualified manufacturers with a minimum 5 years of documented experience in producing hardware and equipment similar to that indicated for this Project and that have a proven record of successful in-service performance.

B. Installer Qualifications: A minimum 3 years documented experience installing both standard and electrified door hardware similar in material, design, and extent to that indicated for this Project and whose work has resulted in construction with a record of successful in-service performance.

C. Door Hardware Supplier Qualifications: Experienced commercial door hardware distributors with a minimum 5 years documented experience supplying both mechanical and electromechanical hardware installations comparable in material, design, and extent to that indicated for this Project. Supplier recognized as a factory direct distributor by the manufacturers of the primary materials with a warehousing facility in Project's vicinity. Supplier to have on staff a certified Architectural Hardware Consultant (AHC) available during the course of the Work to consult with Contractor, Architect, and Owner concerning both standard and electromechanical door hardware and keying.

D. Windstorm Assembly Installer Qualifications: Installers are to be factory trained and certified prior to project bid, and are responsible for commissioning, servicing, and warranting the installed equipment specified for the project.

E. Source Limitations: Obtain each type and variety of door hardware specified in this section from a single source unless otherwise indicated.

1. Electrified modifications or enhancements made to a source manufacturer's product line by a secondary or third party source will not be accepted.

2. Provide electromechanical door hardware from the same manufacturer as mechanical door hardware, unless otherwise indicated.

F. Each unit to bear third party permanent label demonstrating compliance with the referenced standards.

G. Keying Conference: Conduct conference to comply with requirements in Division 01 Section "Project Meetings." Keying conference to incorporate the following criteria into the final keying schedule document:

1. Function of building, purpose of each area and degree of security required.
2. Plans for existing and future key system expansion.
3. Requirements for key control storage and software.
4. Installation of permanent keys, cylinder cores and software.
5. Address and requirements for delivery of keys.

H. Pre-Submittal Conference: Conduct coordination conference in compliance with requirements in Division 01 Section "Project Meetings" with attendance by representatives of Supplier(s), Installer(s), and Contractor(s) to review proper methods and the procedures for receiving, handling, and installing door hardware.

1. Prior to installation of door hardware, conduct a project specific training meeting to instruct the installing contractors' personnel on the proper installation and adjustment of their respective products. Product training to be attended by installers of door hardware (including electromechanical hardware) for aluminum, hollow metal and wood doors. Training will include the use of installation manuals, hardware schedules, templates and physical product samples as required.
2. Inspect and discuss electrical roughing-in, power supply connections, and other preparatory work performed by other trades.
3. Review sequence of operation narratives for each unique access controlled opening.
4. Review and finalize construction schedule and verify availability of materials.
5. Review the required inspecting, testing, commissioning, and demonstration procedures

I. At completion of installation, provide written documentation that components were applied to manufacturer's instructions and recommendations and according to approved schedule.

1.5 DELIVERY, STORAGE, AND HANDLING

A. Inventory door hardware on receipt and provide secure lock-up and shelving for door hardware delivered to Project site. Do not store electronic access control hardware, software or accessories at Project site without prior authorization.

B. Tag each item or package separately with identification related to the final Door Hardware Schedule, and include basic installation instructions with each item or package.

C. Deliver, as applicable, permanent keys, cylinders, cores, access control credentials, software and related accessories directly to Owner via registered mail or overnight package service. Instructions for delivery to the Owner shall be established at the "Keying Conference".

1.6 COORDINATION

A. Templates: Obtain and distribute to the parties involved templates for doors, frames, and other work specified to be factory prepared for installing standard and electrified hardware. Check Shop Drawings of other work to confirm that adequate provisions are made for locating and installing hardware to comply with indicated requirements.

B. Door Hardware and Electrical Connections: Coordinate the layout and installation of scheduled electrified door hardware and related access control equipment with required connections to source power junction boxes, low voltage power supplies, detection and monitoring hardware, and fire and detection alarm systems.

C. Door and Frame Preparation: Doors and corresponding frames are to be prepared, reinforced and pre-wired (if applicable) to receive the installation of the specified electrified, monitoring, signaling and access control system hardware without additional in-field modifications.

1.7 WARRANTY

A. General Warranty: Reference Division 01, General Requirements. Special warranties specified in this Article shall not deprive Owner of other rights Owner may have under other provisions of the Contract Documents and shall be in addition to, and run concurrent with, other warranties made by Contractor under requirements of the Contract Documents.

B. Warranty Period: Written warranty, executed by manufacturer(s), agreeing to repair or replace components of standard and electrified door hardware that fails in materials or workmanship within specified warranty period after final acceptance by the Owner. Failures include, but are not limited to, the following:

1. Structural failures including excessive deflection, cracking, or breakage.
2. Faulty operation of the hardware.
3. Deterioration of metals, metal finishes, and other materials beyond normal weathering.
4. Electrical component defects and failures within the systems operation.

C. Standard Warranty Period: One year from date of Substantial Completion, unless otherwise indicated.

D. Special Warranty Periods:

1. Ten years for mortise locks and latches.
2. Five years for exit hardware.
3. Twenty five years for manual surface door closer bodies.
4. Two years for electromechanical door hardware.

1.8 MAINTENANCE SERVICE

A. Maintenance Tools and Instructions: Furnish a complete set of specialized tools and maintenance instructions as needed for Owner's continued adjustment, maintenance, and removal and replacement of door hardware.

CONFORMED

PART 2 - PRODUCTS

2.1 SCHEDULED DOOR HARDWARE

A. General: Provide door hardware for each door to comply with requirements in Door Hardware Sets and each referenced section that products are to be supplied under.

B. Designations: Requirements for quantity, item, size, finish or color, grade, function, and other distinctive qualities of each type of door hardware are indicated in the Door Hardware Sets at the end of Part 3. Products are identified by using door hardware designations, as follows:

C. Named Manufacturer's Products: Product designation and manufacturer are listed for each door hardware type required for the purpose of establishing requirements. Manufacturers' names are abbreviated in the Door Hardware Schedule.

D. Substitutions: Requests for substitution and product approval for inclusive mechanical and electromechanical door hardware in compliance with the specifications must be submitted in writing and in accordance with the procedures and time frames outlined in Division 01, Substitution Procedures. Approval of requests is at the discretion of the architect, owner, and their designated consultants.

2.2 HANGING DEVICES

A. Hinges: ANSI/BHMA A156.1 certified butt hinges with number of hinge knuckles as specified in the Door Hardware Sets.

1. Quantity: Provide the following hinge quantity, unless otherwise indicated:

    a. Two Hinges: For doors with heights up to 60 inches.
    b. Three Hinges: For doors with heights 61 to 90 inches.
    c. Four Hinges: For doors with heights 91 to 120 inches.
    d. For doors with heights more than 120 inches, provide 4 hinges, plus 1 hinge for every 30 inches of door height greater than 120 inches.

2. Hinge Size: Provide the following, unless otherwise indicated, with hinge widths sized for door thickness and clearances required:

    a. Widths up to 3’0”: 4-1/2” standard or heavy weight as specified.
    b. Sizes from 3’1” to 4’0”: 5” standard or heavy weight as specified.

3. Hinge Weight and Base Material: Unless otherwise indicated, provide the following:

    a. Exterior Doors: Heavy weight, non-ferrous, ball bearing or oil impregnated bearing hinges unless Hardware Sets indicate standard weight.
    b. Interior Doors: Standard weight, steel, ball bearing or oil impregnated bearing hinges unless Hardware Sets indicate heavy weight.

4. Hinge Options: Comply with the following where indicated in the Hardware Sets or on Drawings:

CONFORMED

a. Non-removable Pins: Provide set screw in hinge barrel that, when tightened into a groove in hinge pin, prevents removal of pin while door is closed; for the all out-swinging lockable doors.

Acceptable Manufacturers:

b. McKinney Products (MK).

B. Continuous Geared Hinges: ANSI/BHMA A156.26 Grade 1-600 certified continuous geared hinge. with minimum 0.120-inch thick extruded 6060 T6 aluminum alloy hinge leaves and a minimum overall width of 4 inches. Hinges are non-handed, reversible and fabricated to template screw locations. Factory trim hinges to suit door height and prepare for electrical cut-outs.

1. Acceptable Manufacturers:

a. Hager Companies (HA).
b. Ives (IV).
c. Pemko Manufacturing (PE).

C. Continuous Geared Double-acting Hinges. ANSI/BHMA A156.26 Grade 1-600 Certified continuous geared hinges. Hinges are non-handed and allow the door to swing up to 100 degrees in either direction.

1. Acceptable Manufacturers:

a. Pemko Manufacturing (PE) – DHS Series.

2.3 POWER TRANSFER DEVICES

A. Electrified Quick Connect Transfer Hinges: Provide electrified transfer hinges with Molex™ standardized plug connectors and sufficient number of concealed wires (up to 12) to accommodate the electrified functions specified in the Door Hardware Sets. Connectors plug directly to through-door wiring harnesses for connection to electric locking devices and power supplies. Wire nut connections are not acceptable.

1. Acceptable Manufacturers:

a. McKinney Products (MK) - QC (# wires) Option.
b. Stanley Hardware (ST) – C Option.

B. Concealed Quick Connect Electric Power Transfers: Provide concealed wiring pathway housing mortised into the door and frame for low voltage electrified door hardware. Furnish with Molex™ standardized plug connectors and sufficient number of concealed wires (up to 12) to accommodate the electrified functions specified in the Door Hardware Sets. Connectors plug directly to through-door wiring harnesses for connection to electric locking devices and power supplies. Wire nut connections are not acceptable.

1. Acceptable Manufacturers:

a. Architectural Builders Hardware (AH) PT1000-EZ Series.

b. Securitron (SU) - EL-CEPT Series.
c. Stanley Hardware (ST) EPT-12C Series.

C. Concealed Quick Connect Electric Power Transfers: Provide concealed wiring pathway housing mortised into the door and frame for low voltage electrified door hardware. Furnish with Molex™ standardized plug connectors and sufficient number of concealed wires (up to 12) to accommodate the electrified functions specified in the Door Hardware Sets. Connectors plug directly to through-door wiring harnesses for connection to electric locking devices and power supplies. Wire nut connections are not acceptable.

1. Acceptable Manufacturers:

a. Adams Rite (AD) – 4612 Series.
b. Securitron (SU) - EL-EPT Series.

D. Electric Door Wire Harnesses: Provide electric/data transfer wiring harnesses with standardized plug connectors to accommodate up to twelve (12) wires. Connectors plug directly to through-door wiring harnesses for connection to electric locking devices and power supplies. Provide sufficient number and type of concealed wires to accommodate electric function of specified hardware. Provide a connector for through-door electronic locking devices and from hinge to junction box above the opening. Wire nut connections are not acceptable. Determine the length required for each electrified hardware component for the door type, size and construction, minimum of two per electrified opening.

1. Provide one each of the following tools as part of the base bid contract:
a. McKinney Products (MK) - Electrical Connecting Kit: QC-R001.
b. McKinney Products (MK) - Connector Hand Tool: QC-R003.

2. Acceptable Manufacturers:

a. McKinney Products (MK) – QC-C Series.
b. McKinney Products (MK) – PoE Series.
c. Stanley Hardware (ST) – WH Series.

2.4 CYLINDERS AND KEYING

A. General: Cylinder manufacturer to have minimum (10) years experience designing secured master key systems and have on record a published security keying system policy.

B. Source Limitations: Obtain each type of keyed cylinder and keys from the same source manufacturer as locksets and exit devices, unless otherwise indicated.

1. Acceptable Manufacturers:

a. Arrow (AW).
b. Sargent Manufacturing (SA).

C. Cylinders: Original manufacturer cylinders complying with the following:

1. Mortise Type: Threaded cylinders with rings and cams to suit hardware application.

2. Rim Type: Cylinders with back plate, flat-type vertical or horizontal tailpiece, and raised trim ring.
3. Bored-Lock Type: Cylinders with tailpieces to suit locks.
4. Mortise and rim cylinder collars to be solid and recessed to allow the cylinder face to be flush and be free spinning with matching finishes.
5. Keyway: Manufacturer's Standard.

D. Patented Cylinders: ANSI/BHMA A156.5, Grade 1, certified cylinders employing a utility patented and restricted keyway requiring the use of patented controlled keys. Provide bump resistant, fixed core cylinders as standard with solid recessed cylinder collars. Cylinders are to be factory keyed where permanent keying records will be established and maintained.

1. Provide a 6 pin multi-level master key system comprised of patented controlled keys and security and high security cylinders operated by one (1) key of the highest level. Geographical exclusivity to be provided for all security and high security cylinders and UL437 certification where specified.

    a. Level 1 Cylinders: Provide utility patented controlled keyway cylinders that are furnished with patented keys available only from authorized distribution.
    b. Level 2 Cylinders: Provide utility patented controlled keyway and side bar locking incorporating unique angled bottom pins for geographical exclusivity. Cylinders constructed to provide protection against bumping and picking.
    c. Level 3 Cylinders: Provide utility patented controlled keyway and side bar locking incorporating unique angled bottom pins for geographical exclusivity. Cylinders to be UL437 certified and constructed to provide protection against bumping, picking, and drilling.
    d. Refer to hardware sets for specified levels.

2. Acceptable Manufacturer:

    a. Sargent Manufacturing (SA) - Degree Series.
    b. Corbin Russwin (RU) – Access 3 Series.

E. Keying System: Each type of lock and cylinders to be factory keyed.

1. Conduct specified "Keying Conference" to define and document keying system instructions and requirements.
2. Furnish factory cut, nickel-silver large bow permanently inscribed with a visual key control number as directed by Owner.
3. New System: Key locks to a new key system as directed by the Owner.

F. Key Quantity: Provide the following minimum number of keys:

1. Change Keys per Cylinder: Two (2)
2. Master Keys (per Master Key Level/Group): Five (5).
3. Construction Keys (where required): Ten (10).

G. Construction Keying: Provide construction master keyed cylinders.

H. Construction Keying: Provide temporary keyed construction cores.

I. Key Registration List (Bitting List):

1. Provide keying transcript list to Owner's representative in the proper format for importing into key control software.
2. Provide transcript list in writing or electronic file as directed by the Owner.
3. Furnish a list of opening numbers with locking devices, showing cylinder types and quantities required when cylinders or cores are to be owner furnished.

J. Key Control Cabinet: Provide a key control system including envelopes, labels, and tags with self-locking key clips, receipt forms, 3-way visible card index, temporary markers, permanent markers, and standard metal cabinet. Key control cabinet shall have expansion capacity of 150% of the number of locks required for the project.

1. Acceptable Manufacturers:

a. Lund Equipment (LU).
b. MMF Industries (MM).
c. Telkee (TK).

K. Key Control Software: Provide one network version of "Key Wizard" branded key management software package that includes one year of technical support and upgrades to software at no charge. Provide factory key system formatted for importing into “Key Wizard” software.

2.5 MECHANICAL LOCKS AND LATCHING DEVICES

A. Mortise Locksets, Grade 1 (Heavy Duty): ANSI/BHMA A156.13, Series 1000, Operational Grade 1 certified. Locksets are to be manufactured with a corrosion resistant steel case and be field-reversible for handing without disassembly of the lock body.

1. Acceptable Manufacturers:

a. Corbin Russwin Hardware (RU) – ML2000 Series.
b. Sargent Manufacturing (SA) – 8200 Series.

B. Lock Trim Design: As specified in Hardware Sets.

2.6 ELECTROMECHANICAL LOCKING DEVICES

A. Electromechanical Mortise Locksets, Grade 1 (Heavy Duty): Subject to same compliance standards and requirements as mechanical mortise locksets, electrified locksets to be of type and design as specified below.

1. Electrified Lock Options: Where indicated in the Hardware Sets, provide electrified options including: outside door lock/unlock trim control, latchbolt and lock/unlock status monitoring, and request-to-exit signaling. Unless otherwise indicated, provide electrified locksets standard as fail secure.
2. Acceptable Manufacturers:

a. Corbin Russwin Hardware (RU) - ML20900 Series.
b. Sargent Manufacturing (SA) - 8200 Series.

2.7 LOCK AND LATCH STRIKES

A. Strikes: Provide manufacturer's standard strike with strike box for each latch or lock bolt, with curved lip extended to protect frame, finished to match door hardware set, unless otherwise indicated, and as follows:

1. Flat-Lip Strikes: For locks with three-piece antifriction latchbolts, as recommended by manufacturer.
2. Extra-Long-Lip Strikes: For locks used on frames with applied wood casing trim.
3. Aluminum-Frame Strike Box: Provide manufacturer's special strike box fabricated for aluminum framing.

B. Standards: Comply with the following:

1. Strikes for Mortise Locks and Latches: BHMA A156.13.
2. Strikes for Bored Locks and Latches: BHMA A156.2.
3. Strikes for Auxiliary Deadlocks: BHMA A156.5.
4. Dustproof Strikes: BHMA A156.16.

2.8 CONVENTIONAL EXIT DEVICES

A. General Requirements: All exit devices specified herein shall meet or exceed the following criteria:

1. At doors not requiring a fire rating, provide devices complying with NFPA 101 and listed and labeled for "Panic Hardware" according to UL305. Provide proper fasteners as required by manufacturer including sex nuts and bolts at openings specified in the Hardware Sets.

2. Where exit devices are required on fire rated doors, provide devices complying with NFPA 80 and with UL labeling indicating "Fire Exit Hardware". Provide devices with the proper fasteners for installation as tested and listed by UL. Consult manufacturer’s catalog and template book for specific requirements.

    a. Fire Exit Removable Mullions: Provide keyed removable mullions for use with fire exit devices complying with NFPA 80 that are listed and labeled by a testing and inspecting agency acceptable to authorities having jurisdiction, for fire and panic protection, based on testing according to UL 305 and NFPA 252. Mullions to be used only with exit devices for which they have been tested.

3. Except on fire rated doors, provide exit devices with hex key dogging device to hold the pushbar and latch in a retracted position. Provide optional keyed cylinder dogging on devices where specified in Hardware Sets.

4. Devices must fit flat against the door face with no gap that permits unauthorized dogging of the push bar. The addition of filler strips is not acceptable except in any case where the door light extends behind the device as in a full glass configuration.

5. Flush End Caps: Provide heavy weight impact resistant flush end caps made of architectural metal in the same finish as the devices as in the Hardware Sets. Plastic end caps will not be acceptable.

6. Lever Operating Trim: Where exit devices require lever trim, furnish manufacturer's heavy duty escutcheon trim with four threaded studs for thru-bolts.

    a. Lock Trim Design: As indicated in Hardware Sets, provide finishes and designs to match that of the specified locksets. Provided free-wheeling type trim where indicated.
    b. Where function of exit device requires a cylinder, provide a cylinder (Rim or Mortise) as specified in Hardware Sets.

7. Vertical Rod Exit Devices: Provide and install interior surface and concealed vertical rod exit devices as Less Bottom Rod (LBR) unless otherwise indicated.

8. Narrow Stile Applications: At doors constructed with narrow stiles, or as specified in Hardware Sets, provide devices designed for maximum 2” wide stiles.

9. Dummy Push Bar: Nonfunctioning push bar matching functional push bar.

10. Rail Sizing: Provide exit device rails factory sized for proper door width application.

11. Through Bolt Installation: For exit devices and trim as indicated in Door Hardware Sets.

B. Conventional Push Rail Exit Devices (Heavy Duty): ANSI/BHMA A156.3, Grade 1 certified panic and fire exit hardware devices furnished in the functions specified in the Hardware Sets. Mounting rails to be formed from smooth stainless steel, brass or bronze architectural materials no less than 0.072" thick, with push rails a minimum of 0.062" thickness. Painted or aluminum metal rails are not acceptable. Exit device latch to be investment cast stainless steel, pullman type, with deadlock feature.

1. Acceptable Manufacturers:

    a. Corbin Russwin Hardware (RU) - ED4000 / ED5000 Series.
    b. Sargent Manufacturing (SA) - 80 Series.

C. Conventional Push Rail Exit Devices (Commercial Duty): ANSI/BHMA A156.3, Grade 1 certified panic and fire exit hardware devices furnished in the functions specified in the Hardware Sets. Form from smooth stainless steel, brass, or bronze architectural materials with mounting rails no less than .072” thick and push rails no less than .062” thick. Fabricate latchbolts from investment cast stainless steel, Pullman type, incorporating a deadlocking feature.

1. Acceptable Manufacturers:

    a. Cal Royal (CL) – 7700 Series.
    b. Dorma Products (DO) - 9000 Series.
    c. Falcon Hardware (FA) - 24/25 Series.
    d. Hager (HA) – 4500 Series.
    e. PDQ (PD) – 6200 Series.
    f. Stanley Commercial (ST) – QED110 Series.
    g. Yale Locks and Hardware (YA) - 6000 Series.
    h. No Substitution – Facility Standard.

D. Security Push Rail Exit Devices (Commercial Duty): ANSI/BHMA A156.3, Grade 1 certified rim panic and fire exit hardware devices furnished in the functions specified in the Hardware Sets.

Mounting rails to be formed by extruded aluminum metal rails. Exit device latch to be constructed of high grade, heat treated, corrosion resistant nickel steel alloy, and have a full 3/4" throw projection with slide action positive deadlocking.

1. Static Load Force Resistance: Minimum 3000 lbs certified independent tested.

2. Acceptable Manufacturers:

    a. Yale Locks and Hardware (YA) - 6150 / 6250 Series.
    b. No Substitution – Facility Standard.

E. Tube Steel Removable Mullions: ANSI/BHMA A156.3 removable steel mullions with malleable-iron top and bottom retainers and a primed paint finish. Provide keyed removable feature, stabilizers, and mounting brackets as specified in the Hardware Sets. At openings designed for severe wind load conditions due to hurricanes or tornadoes, provide manufacturers approved mullion and accessories to meet applicable state and local windstorm codes.

1. Acceptable Manufacturers:

    a. Corbin Russwin Hardware (RU) - 700/900 Series.
    b. Sargent Manufacturing (SA) - 980S Series.

2.9 ELECTROMECHANICAL CONVENTIONAL EXIT DEVICES

A. Electrified Conventional Push Rail Devices (Heavy Duty): Subject to same compliance standards and requirements as mechanical exit devices, electrified devices to be of type and design as specified below. Include any specific controllers when conventional power supplies are not sufficient to provide the proper inrush current.

1. Acceptable Manufacturers:

    a. Corbin Russwin Hardware (RU) - ED4000 / ED5000 Series.
    b. Sargent Manufacturing (SA) - 80 Series.

B. Electrified Conventional Push Rail Devices (Commercial Duty): Subject to same compliance standards and requirements as mechanical exit devices, electrified devices to be of type and design as specified below. Include any specific controllers when conventional power supplies are not sufficient to provide the proper inrush current.

1. Acceptable Manufacturers:

    a. Cal Royal (CL) - 7700 Series.
    b. Dorma (DO) - 9000 Series.
    c. Falcon (FA) - 24/25 Series.
    d. Hager (HA) - 4500 Series.
    e. PDQ (PD) – 6200 Series.
    f. Stanley Commercial (SC) – QED110 Series.
    g. Yale Locks and Hardware (YA) - 6000 Series.
    h. No Substitution – Facility Standard.

C. Electrified Security Push Rail Devices (Commercial Duty): Subject to same compliance standards and requirements as mechanical security exit devices, electrified devices to be of type and design as specified below. Include any specific controllers when conventional power supplies are not sufficient to provide the proper inrush current.

1. Acceptable Manufacturers:

a. Yale Locks and Hardware (YA) – 6150/6250 Series.
b. No Substitution – Facility Standard.

D. Electrified Options: As indicated in hardware sets, provide electrified exit device options including: electric latch retraction , electric dogging, outside door trim control, exit alarm, latchbolt monitoring, lock/unlock status monitoring, touchbar monitoring and request-to-exit signaling. Unless otherwise indicated, provide electrified exit devices standard as fail secure.

2.10 DOOR CLOSERS

A. All door closers specified herein shall meet or exceed the following criteria:

1. General: Door closers to be from one manufacturer, matching in design and style, with the same type door preparations and templates regardless of application or spring size. Closers to be non-handed with full sized covers including installation and adjusting information on inside of cover.

2. Standards: Closers to comply with UL-10C and UBC 7-2 for Positive Pressure Fire Test and be U.L. listed for use of fire rated doors.

3. Cycle Testing: Provide closers which have surpassed 15 million cycles in a test witnessed and verified by UL.

4. Size of Units: Comply with manufacturer's written recommendations for sizing of door closers depending on size of door, exposure to weather, and anticipated frequency of use. Where closers are indicated for doors required to be accessible to the physically handicapped, provide units complying with ANSI ICC/A117.1.

5. Closer Arms: Provide heavy duty, forged steel closer arms unless otherwise indicated in Hardware Sets.

a. Where closers are indicated to have mechanical dead-stop, provide heavy duty arms and brackets with an integral positive stop.
b. Where closers are indicated to have mechanical hold open, provide heavy duty units with an additional built-in mechanical holder assembly designed to hold open against normal wind and traffic conditions. Holder to be manually selectable to on-off position.
c. Where closers are indicated to have a cushion-type stop, provide heavy duty arms and brackets with spring stop mechanism to cushion door when opened to maximum degree.
d. Closers shall not be installed on exterior or corridor side of doors; where possible install closers on door for optimum aesthetics. Provide drop plates or other accessories as required for proper mounting.

6. Closer Accessories: Provide door closer accessories including custom templates, special mounting brackets, spacers and drop plates, and through-bolt or security type fasteners as specified in the door Hardware Sets.

B. Door Closers, Surface Mounted (Heavy Duty): ANSI/BHMA A156.4, Grade 1 surface mounted, heavy duty door closers with complete spring power adjustment, sizes 1 thru 6; and fully operational adjustable according to door size, frequency of use, and opening force. Closers to be rack and pinion type, one piece cast iron or aluminum alloy body construction, with adjustable backcheck and separate non-critical valves for closing sweep and latch speed control. Provide non-handed units standard.

1. Acceptable Manufacturers:

a. Corbin Russwin Hardware (RU) - DC8000 Series.
b. Norton Door Controls (NO) - 7500 Series.

2.11 AUTOMATIC DOOR OPERATORS

A. General: Provide operators of size recommended by manufacturer for door size, weight, and movement; for condition of exposure; and for compliance with UL 325. Coordinate operator mechanisms with door operation, hinges, and activation devices.

1. Fire-Rated Doors: Provide door operators for fire-rated door assemblies that comply with NFPA 80 for fire-rated door components and are listed and labeled by a qualified testing agency.

B. Electrohydraulic Door Operators: Self-contained low-pressure units with rack and pinion design contained within a cast aluminum housing. Door closing speed controlled by independent hydraulic adjustment valves in the sweep and latch range of the closing cycle. Operator is to provide conventional door closer opening and closing forces unless the power operator motor is activated. Unit is to include an adjustable hydraulic backcheck valve to cushion the door speed if opened violently. Non-handed units for both push and pull side applications.

C. Brackets and Reinforcements: Manufacturer's standard, fabricated from aluminum with nonferrous shims for aligning system components.

D. Standard: Certified ANSI/BHMA A156.19.

1. Performance Requirements:

a. Opening Force if Power Fails: Not more than 15 lbf required to release a latch if provided, not more than 30 lbf required to manually set door in motion, and not more than 15 lbf required to fully open door.
b. Entrapment Protection: Not more than 15 lbf required to prevent stopped door from closing or opening.

E. Configuration: Surface mounted. Door operators to control single swinging and pair of swinging doors.

F. Operation: Power opening and spring closing operation capable of meeting ANSI A117.1 accessibility guideline. Provide time delay for door to remain open before initiating closing cycle as required by ANSI/BHMA A156.19. When not in automatic mode, door operator to function as

manual door closer with fully adjustable opening and closing forces, with or without electrical power.

1. On-off switch to control power to be key switch operated.

G. Features: Operator units to have full feature adjustments for door opening and closing force and speed, backcheck, motor assist acceleration from 0 to 30 seconds, time delay, vestibule interface delay, obstruction recycle, and hold open time from 0 up to 30 seconds.

H. Provide outputs and relays on board the operator to allow for coordination of exit device latch retraction, electric strikes, magnetic locks, card readers, safety and motion sensors and specified auxiliary contacts.

I. Activation Devices: Provide activation devices in accordance with ANSI/BHMA A156.19 standard, for condition of exposure indicated and for long term, maintenance free operation under normal traffic load operation. Coordinate activation control with electrified hardware and access control interfaces. Activation switches are standard SPST, with optional DPDT availability.

J. Signage: As required by cited ANSI/BHMA A156.19 standard for the type of operator.

1. Acceptable Manufacturers:

a. Norton Door Controls (NO) - 6000 Series.

2.12 ARCHITECTURAL TRIM

A. Door Protective Trim

1. General: Door protective trim units to be of type and design as specified below or in the Hardware Sets.

2. Size: Fabricate protection plates (kick, armor, or mop) not more than 2" less than door width (LDW) on stop side of single doors and 1” LDW on stop side of pairs of doors, and not more than 1" less than door width on pull side. Coordinate and provide proper width and height as required where conflicting hardware dictates. Height to be as specified in the Hardware Sets.

3. Metal Protection Plates: ANSI/BHMA A156.6 certified metal protection plates (kick, armor, or mop), beveled on four edges (B4E), fabricated from the following:

a. Stainless Steel: 300 series, 050-inch thick, with countersunk screw holes (CSK).

4. Fasteners: Provide manufacturer's designated fastener type as specified in the Hardware Sets.

5. Metal Door Edging: Door protection edging fabricated from a minimum .050-inch thick metal sheet, formed into an angle or "U" cap shapes, surface or mortised mounted onto edge of door. Provide appropriate leg overlap to account for protection plates as required. Height to be as specified in the Hardware Sets.

6. Acceptable Manufacturers:

CONFORMED

a. Rockwood Manufacturing (RO).

2.13 DOOR STOPS AND HOLDERS

A. General: Door stops and holders to be of type and design as specified below or in the Hardware Sets.

B. Door Stops and Bumpers: ANSI/BHMA A156.16, Grade 1 certified door stops and wall bumpers. Provide wall bumpers, either convex or concave types with anchorage as indicated, unless floor or other types of door stops are specified in Hardware Sets. Do not mount floor stops where they will impede traffic. Where floor or wall bumpers are not appropriate, provide overhead type stops and holders.

1. Acceptable Manufacturers:

a. Rockwood Manufacturing (RO).

C. Overhead Door Stops and Holders: ANSI/BHMA A156.6, Grade 1 certified overhead stops and holders to be surface or concealed types as indicated in Hardware Sets. Track, slide, arm and jamb bracket to be constructed of extruded bronze and shock absorber spring of heavy tempered steel. Provide non-handed design with mounting brackets as required for proper operation and function.

1. Acceptable Manufacturers:

a. Rixson Door Controls (RF).

2.14 ARCHITECTURAL SEALS

A. General: Thresholds, weatherstripping, and gasket seals to be of type and design as specified below or in the Hardware Sets. Provide continuous weatherstrip gasketing on exterior doors and provide smoke, light, or sound gasketing on interior doors where indicated. At exterior applications provide non-corrosive fasteners and elsewhere where indicated.

B. Smoke Labeled Gasketing: Assemblies complying with NFPA 105 that are listed and labeled by a testing and inspecting agency acceptable to authorities having jurisdiction, for smoke control ratings indicated, based on testing according to UL 1784.

1. Provide smoke labeled perimeter gasketing at all smoke labeled openings.

C. Fire Labeled Gasketing: Assemblies complying with NFPA 80 that are listed and labeled by a testing and inspecting agency acceptable to authorities having jurisdiction, for fire ratings indicated, based on testing according to UL-10C.

1. Provide intumescent seals as indicated to meet UL10C Standard for Positive Pressure Fire Tests of Door Assemblies, and UBC 7-2, Fire Tests of Door Assemblies.

D. Sound-Rated Gasketing: Assemblies that are listed and labeled by a testing and inspecting agency, for sound ratings indicated, based on testing according to ASTM E 1408.

E. Replaceable Seal Strips: Provide only those units where resilient or flexible seal strips are easily replaceable and readily available from stocks maintained by manufacturer.

F. Acceptable Manufacturers:

1. National Guard Products (NG).
2. Pemko Manufacturing (PE).
3. Reese Enterprises, Inc. (RS).

G. Energy Efficient Switching Power Supplies: Provide UL listed or recognized filtered and regulated power supplies. Provide single voltage units as shown in the hardware sets. Units must have one access control input and one fire alarm input. Standby power consumption of unit must be less than 10mW at 120VAC. Provide integral battery backup as standard for all units. Provide the least number of units, at the appropriate amperage level, sufficient to exceed the required total draw for the specified electrified hardware and access control equipment.

1. Acceptable Manufacturers:

a. Securitron (SU) – EPS Series.

2.15 FABRICATION

A. Fasteners: Provide door hardware manufactured to comply with published templates generally prepared for machine, wood, and sheet metal screws. Provide screws according to manufacturers recognized installation standards for application intended.

2.16 FINISHES

A. Standard: Designations used in the Hardware Sets and elsewhere indicate hardware finishes complying with ANSI/BHMA A156.18, including coordination with traditional U.S. finishes indicated by certain manufacturers for their products.

B. Provide quality of finish, including thickness of plating or coating (if any), composition, hardness, and other qualities complying with manufacturer's standards, but in no case less than specified by referenced standards for the applicable units of hardware.

C. Protect mechanical finishes on exposed surfaces from damage by applying a strippable, temporary protective covering before shipping.

PART 3 - EXECUTION

3.1 EXAMINATION

A. Examine scheduled openings, with Installer present, for compliance with requirements for installation tolerances, labeled fire door assembly construction, wall and floor construction, and other conditions affecting performance.

B. Notify architect of any discrepancies or conflicts between the door schedule, door types, drawings and scheduled hardware. Proceed only after such discrepancies or conflicts have been resolved in writing.

3.2 PREPARATION

A. Hollow Metal Doors and Frames: Comply with ANSI/DHI A115 series.

B. Wood Doors: Comply with ANSI/DHI A115-W series.

3.3 INSTALLATION

A. Install each item of mechanical and electromechanical hardware and access control equipment to comply with manufacturer's written instructions and according to specifications.

1. Installers are to be trained and certified by the manufacturer on the proper installation and adjustment of fire, life safety, and security products including: hanging devices; locking devices; closing devices; and seals.

B. Mounting Heights: Mount door hardware units at heights indicated in following applicable publications, unless specifically indicated or required to comply with governing regulations:

1. Standard Steel Doors and Frames: DHI's "Recommended Locations for Architectural Hardware for Standard Steel Doors and Frames."
2. Wood Doors: DHI WDHS.3, "Recommended Locations for Architectural Hardware for Wood Flush Doors."
3. Where indicated to comply with accessibility requirements, comply with ANSI A117.1 "Accessibility Guidelines for Buildings and Facilities."
4. Provide blocking in drywall partitions where wall stops or other wall mounted hardware is located.

C. Retrofitting: Install door hardware to comply with manufacturer's published templates and written instructions. Where cutting and fitting are required to install door hardware onto or into surfaces that are later to be painted or finished in another way, coordinate removal, storage, and reinstallation of surface protective trim units with finishing work specified in Division 9 Sections. Do not install surface-mounted items until finishes have been completed on substrates involved.

D. Thresholds: Set thresholds for exterior and acoustical doors in full bed of sealant complying with requirements specified in Division 7 Section "Joint Sealants."

E. Storage: Provide a secure lock up for hardware delivered to the project but not yet installed. Control the handling and installation of hardware items so that the completion of the work will not be delayed by hardware losses before and after installation.

3.4 FIELD QUALITY CONTROL

A. Field Inspection: Supplier will perform a final inspection of installed door hardware and state in report whether work complies with or deviates from requirements, including whether door hardware is properly installed, operating and adjusted.

3.5 ADJUSTING

A. Initial Adjustment: Adjust and check each operating item of door hardware and each door to ensure proper operation or function of every unit. Replace units that cannot be adjusted to operate as intended. Adjust door control devices to compensate for final operation of heating and ventilating equipment and to comply with referenced accessibility requirements.

3.6 CLEANING AND PROTECTION

A. Protect all hardware stored on construction site in a covered and dry place. Protect exposed hardware installed on doors during the construction phase. Install any and all hardware at the latest possible time frame.

B. Clean adjacent surfaces soiled by door hardware installation.

C. Clean operating items as necessary to restore proper finish. Provide final protection and maintain conditions that ensure door hardware is without damage or deterioration at time of owner occupancy.

3.7 DEMONSTRATION

A. Instruct Owner's maintenance personnel to adjust, operate, and maintain mechanical and electromechanical door hardware.

3.8 DOOR HARDWARE SCHEDULE

A. The hardware sets represent the design intent and direction of the owner and architect. They are a guideline only and should not be considered a detailed hardware schedule. Discrepancies, conflicting hardware and missing items should be brought to the attention of the architect with corrections made prior to the bidding process. Omitted items not included in a hardware set should be scheduled with the appropriate additional hardware required for proper application and functionality.

B. Manufacturer’s Abbreviations:

1. MK - McKinney
2. PE - Pemko
3. SA - Sargent
4. SC - Schlage
5. RF - Rixson
6. NO - Norton
7. RO - Rockwood
8. SU - Securitron
9. 00 - Other

Hardware Schedule

Set: 1.0

Doors: 101A, 101B

2	Continuous Hinge	CFM HD1 PT		PE
1	Exit Device	DG1 43 56 AD8610 ETL	US32D	SA
1	Exit Device	DG1 43 55 56 AD8606 ETL	US32D	SA
2	Concealed Overhead Stop	1-X36 (as req'd in lieu of wall stop)	630	RF
2	Door Operator	6030 D	689	NO
2	Push Plate	639		NO
1	Threshold	Per Sill Detail		PE
1	Rain Guard	346C		PE
2	Sweep	18062CNB		PE
2	ElectroLynx Harness	QC-C1500P		MK
2	Electric Power Transfer	EL-CEPT		SU
2	ElectroLynx Harness	QC-C006P		MK
1	Keyswitch	MKA2		SU
1	Power Supply	BPS-24		SU

Notes: Weatherstripping and Astragal by Aluminum Door Supplier
Card reader, Wiring and electrical interface by Security Contractor

Set: 2.0

Doors: 105A, 105B

1	Continuous Hinge	CFM HD1		PE
1	Exit Device	DG1 16 43 AD8504 ETL	US32D	SA
1	Door Closer	CPS7500	689	NO
1	Threshold	Per Sill Detail		PE
1	Rain Guard	346C		PE
1	Sweep	18062CNB		PE

Notes: Weatherstripping by Aluminum Door Supplier

Set: 3.0

Doors: 113A

1	Continuous Hinge	CFM HD1 PT		PE
1	Fail Secure Electric Lock	DG1 8271-24V LNL	US26D	SA
1	Door Closer	CPS7500	689	NO
1	Kick Plate	K1050 10" high 4BE CSK	US32D	RO
1	Threshold	Per Sill Detail		PE

1	Rain Guard	346C		PE
1	Gasketing	2891APK		PE
1	Sweep	18062CNB		PE
1	ElectroLynx Harness	QC-C1500P		MK
1	ElectroLynx Harness	QC-C400P		MK
1	Electric Power Transfer	EL-CEPT		SU
1	Power Supply	BPS-24		SU

Notes: Card reader, Wiring and electrical interface by Security Contractor
Door Operation: Door is normally closed and locked. Upon valid presentation of credential lever will unlock. Free egress at all times. Upon loss of power or fire alarm door will remain locked (Fail Secure)

Set: 4.0

Doors: 122A

1	Continuous Hinge	CFM HD1 PT		PE
1	Fail Secure Electric Lock	DG1 8271-24V LNL	US26D	SA
1	Door Closer	7500	689	NO
1	Kick Plate	K1050 10" high 4BE CSK	US32D	RO
1	Door Stop	466	Black	RO
1	Threshold	Per Sill Detail		PE
1	Rain Guard	346C		PE
1	Gasketing	2891APK		PE
1	Sweep	18062CNB		PE
1	ElectroLynx Harness	QC-C1500P		MK
1	ElectroLynx Harness	QC-C400P		MK
1	Electric Power Transfer	EL-CEPT		SU
1	Power Supply	BPS-24		SU

Notes: Card reader, Wiring and electrical interface by Security Contractor
Door Operation: Door is normally closed and locked. Upon valid presentation of credential lever will unlock. Free egress at all times. Upon loss of power or fire alarm door will remain locked (Fail Secure)

Set: 5.0

Doors: 112A

1	Continuous Hinge	CFM HD1		PE
1	Continuous Hinge	CFM HD1 PT		PE
1	Removable Mullion	L980S	PC	SA
1	Exit Device (exit only)	DG1 16 43 8810	US32D	SA
1	Exit Device	DG1 43 55 56 8804 ETL	US32D	SA
1	Cylinder	DG1 41	US15	SA

2	Door Closer	CPS7500	689	NO
2	Kick Plate	K1050 10" high 4BE CSK	US32D	RO
1	Threshold	Per Sill Detail		PE
1	Rain Guard	346C		PE
1	Gasketing	2891APK		PE
2	Sweep	18062CNB		PE
1	ElectroLynx Harness	QC-C1500P		MK
1	Electric Power Transfer	EL-CEPT		SU
1	ElectroLynx Harness	QC-C006P		MK
1	Power Supply	BPS-24		SU

Notes: Card reader, Wiring and electrical interface by Security Contractor
Operational Narrative - Doors are normally closed and locked. Upon presentation of valid credential, door will momentarily unlatch. Free egress at all times. Upon loss of power or activation of the fire alarm, doors will remain closed and locked. Fail Secure

Set: 6.0

Doors: 105C

2	Continuous Hinge	CFM HD1		PE
1	Exit Device	DG1 NB 16 43 AD8410	US32D	SA
1	Exit Device	DG1 NB 16 43 AD8413 ETL	US32D	SA
2	Door Closer	CPS7500	689	NO

Notes: Balance of hardware by Aluminum Door Supplier

Set: 7.0

Doors: 104A, 115A

3	Hinge	TA2714 4-1/2" x 4-1/2"	US26D	MK
1	Storeroom Lock	DG1 8204 LNL	US26D	SA
1	Door Closer	CPS7500	689	NO
1	Kick Plate	K1050 10" high 4BE CSK	US32D	RO
3	Silencer	608		RO

Set: 8.0

Doors: 118A

3	Hinge	TA2714 4-1/2" x 4-1/2"	US26D	MK
1	Storeroom Lock	DG1 8204 LNL	US26D	SA
1	Door Closer	7500	689	NO
1	Kick Plate	K1050 10" high 4BE CSK	US32D	RO
1	Wall Stop	403	US26D	RO

3	Silencer	608		RO

Set: 9.0

Doors: 106A, 109A, 110A

3	Hinge	TA2714 4-1/2" x 4-1/2"	US26D	MK
1	Office Lock	DG1 LB 8205 LNL	US26D	SA
1	Wall Stop	403	US26D	RO
3	Silencer	608		RO

Set: 10.0

Doors: 108A, 119A, 119B, 120A, 121A

3	Hinge	TA2714 4-1/2" x 4-1/2"	US26D	MK
1	Passage Set	8215 LNL	US26D	SA
1	Wall Stop	403	US26D	RO
3	Silencer	608		RO

Set: 11.0

Doors: 107A, 111A

2	Hinge	TA2714 4-1/2" x 4-1/2"	US26D	MK
1	Hinge	TA2714 QCW 4-1/2" x 4-1/2"	US26D	MK
1	Fail Secure Electric Lock	DG1 8271-24V LNL	US26D	SA
1	Door Closer	7500	689	NO
1	Kick Plate	K1050 10" high 4BE CSK	US32D	RO
1	Wall Stop	403	US26D	RO
3	Silencer	608		RO
1	ElectroLynx Harness	QC-C1500P		MK
1	ElectroLynx Harness	QC-C400P		MK
1	Power Supply	BPS-24		SU

Notes: Card reader, Wiring and electrical interface by Security contractor
Door Operation: Door is normally closed and locked. Upon valid presentation of credential lever will unlock. Free egress at all times. Upon loss of power or fire alarm door will remain locked (Fail Secure)

Set: 12.0

Doors: 114A, 122B

2	Hinge	TA2714 NRP 4-1/2" x 4-1/2"	US26D	MK
1	Hinge	TA2714 QCW 4-1/2" x 4-1/2"	US26D	MK
1	Fail Secure Electric Lock	DG1 8271-24V LNL	US26D	SA
1	Concealed Overhead Stop	1-X36 (as req'd in lieu of wall stop)	630	RF

1	Door Closer	7500	689	NO
1	Kick Plate	K1050 10" high 4BE CSK	US32D	RO
1	Wall Stop	403	US26D	RO
3	Silencer	608		RO
1	ElectroLynx Harness	QC-C1500P		MK
1	ElectroLynx Harness	QC-C400P		MK
1	Power Supply	BPS-24		SU

Notes: Card reader, Wiring and electrical interface by Security Consultant
Operational Narrative - Door is normally closed and locked. Upon presentation of valid credential door will momentarily unlock. Free egress at all times. Upon loss of power or activation of the fire alarm door will remain closed and locked.

Set: 13.0

Doors: 116A, 117A

3	Hinge	TA2714 4-1/2" x 4-1/2"	US26D	MK
1	Privacy Set	LB 8265 LNL	US26D	SA
1	Door Closer	7500	689	NO
1	Mop Plate	K1050 6" high 4BE CSK	US32D	RO
1	Kick Plate	K1050 10" high 4BE CSK	US32D	RO
1	Wall Stop	403	US26D	RO
3	Silencer	608		RO

Set: 14.0

1	By Others			00

Set: 15.0

Doors: 102A, 103A

1	Cased Openings			00

Set: 16.0

Doors: x

2	Hinge	TA2714 NRP 4-1/2" x 4-1/2"	US26D	MK
1	Storeroom Lock	DG1 8204 LNL	US26D	SA
3	Silencer	608		RO

END OF SECTION

CONFORMED

SECTION 08 71 13

AUTOMATIC DOOR OPERATORS

PART 1 - GENERAL

1.1 RELATED DOCUMENTS

A. Drawings and general provisions of the Contract, including General and Supplementary Conditions and Division 01 Specification Sections, apply to this Section.

1.2 SUMMARY

A. Section Includes:

1. Low energy automatic door operators for swinging doors.

B. Related Sections:

1. Division 08 Section “Door Schedule”.
2. Division 08 Section “Hollow Metal Doors and Frames”.
3. Division 08 Section “Clad Wood Doors”.
4. Division 08 Section “Door Hardware”.
5. Division 08 Section “Access Control Hardware”.
6. Division 26 Section “Electrical”.

A. Codes and Standards: Comply with the version year adopted by the Authority Having Jurisdiction.

1. ANSI A117.1 - Accessible and Usable Buildings and Facilities.
2. ANSI/BHMA A156.4 - Door Controls, Door Closers.
3. ANSI/BHMA A156.19 - Power Assist and Low-Energy Power Operated Doors.
4. ICC/IBC - International Building Code.
5. NFPA 70 - National Electrical Code.
6. NFPA 80 - Fire Doors and Windows.
7. NFPA 101 - Life Safety Code.
8. NFPA 105 - Installation of Smoke Door Assemblies.
9. UL/ULC and CSA C22.2 – Standards for Automatic Door Operators Used on Fire and Smoke Barrier Doors and Systems of Doors.
10. UL 325 - Door, Drapery, Gate, Louver, and Window Operators and Systems.
11. State Building Codes, Local Amendments.

1.3 PERFORMANCE REQUIREMENTS

A. Automatic door operators to be used on interior or exterior doors; up to 200 pounds (91 kg) weight and maximum door width of 48" (1219 mm).

1. Auto door operator capable of operating within temperature ranges of -22°F (-30°C) and 122°F (50°C).

CONFORMED

1.4 SUBMITTALS

A. Product Data: Manufacturer's product data sheets including installation details, material descriptions, dimensions of individual components and profiles, and finishes for automatic door operators, including activation devices. Include operating characteristics, electrical characteristics, and furnished accessories.

B. Shop Drawings: Include details and attachments to other work.

1. Include locations and elevations of each unique entrance showing activation devices.
2. Indicate required clearances, components, and location and size of field connections.
3. Wiring Diagrams: For power, signal, and activation wiring.

C. Qualification Data: Provide copy of manufacturer's official certification or accreditation document indicating proof of status as a qualified and authorized installer of automatic door operators and accessories.

D. Operating and Maintenance Manuals: Provide manufacturer's operating and maintenance manual for each item comprising the automatic door operator installation in quantity as required in Division 01, Closeout Submittals. The manual to include the name, address, and contact information of the manufacturer and Installer providing the operators and installation. The final copies delivered after completion of the installation test to include "as built" modifications made during installation, checkout, and acceptance.

E. Warranties and Maintenance: Special warranties and maintenance agreements specified in this Section.

1.5 QUALITY ASSURANCE

A. Installer Qualifications: Manufacturer's authorized representative who is trained and approved for installation and maintenance of units required for this Project.

B. Certified Installer Qualifications: Locally certified ASSA ABLOY Power Operator Preferred Installer required for the installation and maintenance of the automatic door operator units and accessories indicated for the Project.

C. Source Limitations: Obtain automatic door operators, including activation devices, from single source, qualified supplier unless otherwise indicated.

D. Electrical Components, Devices, and Accessories: Listed and labeled as defined in NFPA 70, by a testing agency, and marked for intended location and application.

E. Exit Door Requirements: Comply with requirements of authorities having jurisdiction for doors with automatic door operators serving as a component of a required means of egress.

F. Fire Rated Door Assemblies: Provide operators for fire rated door assemblies that are listed and labeled by a testing and inspecting agency acceptable to authorities having jurisdiction for use on types and sizes of labeled fire doors required.

G. Pre-Submittal Conference: Conduct coordination conference in compliance with requirements in Division 01 Section "Project Meetings" with attendance by representatives of Supplier, Installer, and Contractor to review proper methods and the procedures for receiving, handling, and installing automatic door operators.

1. Prior to installation of automatic door operators, arrange for certified Installer's representative to conduct a project specific meeting to review the installation and maintenance of their respective products. Project meeting to be attended by representatives of related trades furnishing and installing the aluminum, hollow metal and wood doors sections.
2. Review and finalize construction schedule and verify availability of materials.

1.6 COORDINATION

A. Electrical Systems Coordination: Coordinate the layout and installation of scheduled automatic door operators and related activation devices, with required connections to source power junction boxes, remote power supplies, access control equipment, detection and monitoring hardware, and fire alarm system.

B. Templates: Obtain and distribute to the parties involved, templates for doors, frames, operators, and other work specified to be factory prepared and reinforced for installing automatic door operators. Check Shop Drawings of other work to confirm that adequate provisions are made for locating and installing automatic door operators to comply with indicated requirements.

C. Door and Frame Preparation: Related Division 08 Sections (Steel, Aluminum and Wood) doors and corresponding frames are to be prepared, reinforced and pre-wired (if applicable) to receive the installation of the specified automatic door operators without additional in-field modifications.

1.7 WARRANTY

A. General Warranty: Reference Division 01, General Requirements. Special warranties specified in this Article shall not deprive Owner of other rights Owner may have under other provisions of the Contract Documents and shall be in addition to, and run concurrent with, other warranties made by Contractor under requirements of the Contract Documents.

B. Special Warranty: Written warranty, executed by manufacturer, agreeing to repair or replace components of automatic door operators that fail in materials or workmanship within specified warranty period after final acceptance by Owner. Failures include, but are not limited to, the following:

1. Faulty or sporadic operation of automatic door operator, including activation and safety devices.
2. Deterioration of metals, metal finishes, and other materials beyond normal weathering or use.

C. Special Warranty Period: Two years from date of Substantial Completion.

D. Provide extended warranty from defects in material or workmanship under normal use for a period of 3 years from the date of substantial completion for units installed by a certified ASSA ABLOY Power Operator Preferred Installer in accordance with the manufacturer's written warranty certificate.

1.8 MAINTENANCE SERVICE

A. Maintenance Service: Beginning at Substantial Completion, and running concurrent with the specified warranty period, provide continuous (6) months full maintenance by skilled employees of automatic door operator Installer. Include planned and preventive maintenance, repair or

replacement of worn or defective components, lubrication, cleaning, and adjusting as required for proper door operation. Provide parts and supplies the same as those used in the manufacture and installation of original equipment.

B. Extended Maintenance Support and Service Agreement: Submit for Owner's consideration an optional extended Service Agreement for the installed automatic door operator system. The extended Service Agreement is considered elective and is without manufacturer's requirement stipulating mandatory coverage for owner and/or vendor system support.

1. A published copy of this agreement to be included with the submittal package
2. Support for the installed automatic door operator system is provided through the vendor under a specified, limited 24 hour support program.
3. Automatic door operators and components are to be available on a one-day turn around time frame from the vendor.

PART 2 - PRODUCTS

2.1 LOW ENERGY DOOR OPERATORS

A. Standard: Certified ANSI/BHMA A156.19.

1. Performance Requirements:

a. Opening Force if Power Fails: Not more than 15 lbf required to release a latch if provided, not more than 30 lbf required to manually set door in motion, and not more than 15 lbf required to fully open door.
b. Entrapment Protection: Not more than 15 lbf required to prevent stopped door from closing or opening.

B. Configuration: Surface mounted or in-ground as required. Door operators to control single swinging and pair of swinging doors.

C. Operation: Power opening and spring closing operation capable of meeting ANSI A117.1 accessibility guideline. Provide time delay for door to remain open before initiating closing cycle as required by ANSI/BHMA A156.19. When not in automatic mode, door operator to function as manual door closer with fully adjustable opening and closing forces, with or without electrical power.

D. Features: Operator units to have full feature adjustments for door opening and closing force and speed, backcheck, motor assist acceleration from 0 to 30 seconds, time delay, vestibule interface delay, obstruction recycle, and hold open time from 0 up to 30 seconds.

1. Provide outputs and relays on board the operator to allow for coordination of exit device latch retraction, electric strikes, magnetic locks, card readers, safety and motion sensors and specified auxiliary contacts.

2.2 ACTIVATION DEVICES

A. General: Provide activation devices in accordance with ANSI/BHMA A156.19 standard, for condition of exposure indicated and for long term, maintenance free operation under normal traffic load operation. Coordinate activation control with electrified hardware and access control interfaces. Activation switches are standard SPST, with optional DPDT availability.

B. Push-Plate Switch: Momentary contact door control switch with push-plate actuator.

1. Configuration: Square or round push-plate control switch with single or double gang junction box mounting. Provide narrow profile face plate where indicated for jamb or mullion mounting.

a. Mounting Location: As indicated on Drawings.

2. Push-Plate Material: Stainless steel.
3. Message: International symbol of accessibility with "Push (Press) to Open (Operate)" text.
4. Acceptable Manufacturers:

a. Norton Door Controls (NO) – 500 Series.

C. Key Switch: Key controlled actuator device enclosed in single or double gang junction box.

1. Faceplate Material: Stainless steel.
2. Functions: On-off, maintained contact.
3. Two-way Mounting: Recess or surface mounting as indicated on Drawings.
4. Acceptable Manufacturers:

a. Securitron (SU) – MKA Series.

D. Bollard Switch Post: Manufacturer’s standard. Surface Mounted (above ground). Prepared for indicated switch types.

1. Where required, prepare bollard posts for card readers.
2. Acceptable Manufacturers:

a. Norton Door Controls (NO) – 500POST Series.

2.3 ACCESSORIES

A. Signage: As required by cited ANSI/BHMA A156.19 standard for the type of operator.

2.4 FINISHES

A. Standard: Designations used to indicate hardware finishes complying with ANSI/BHMA A156.18, including coordination with traditional U.S. finishes indicated by certain manufacturers for their products.

B. Provide quality of finish, including thickness of plating or coating (if any), composition, hardness, and other qualities complying with manufacturer's standards, but in no case less than specified by referenced standards for the applicable units of hardware. Units will be sprayed with a combination of waterborne acrylic and polyester powder coat.

C. Protect mechanical finishes on exposed surfaces from damage by applying a strippable, temporary protective covering before shipping.

CONFORMED

PART 3 - EXECUTION

3.1 EXAMINATION

A. Examine conditions, with Installer present, for compliance with requirements for installation tolerances, door and frame preparation and reinforcements, power connections, electrical systems interfaces, and other conditions affecting performance of automatic door operators.

B. Notify architect of any discrepancies or conflicts between the door schedule, door types, drawings and scheduled hardware. Proceed only after such discrepancies or conflicts have been resolved in writing.

3.2 INSTALLATION

A. General: Install complete automatic door operators according to manufacturer's written instructions and ANSI/BHMA A156;19 standard, including activation devices, control wiring, remote power units if any, connection to the building's fire alarm system, and required signage.

B. Power Connection: Reference Division 26 "Electrical" Sections for connection to electrical power distribution system.

C. Access Control System: Coordinate connections and operation with access control system

D. Signage: Apply signage as required by ANSI/BHMA A156.19 standard for type of door operator and direction of pedestrian travel.

3.3 FIELD QUALITY CONTROL

A. Inspection: Certified Installer' representative to inspect and test automatic door operators to determine compliance of installed systems with specifications and ANSI/BHMA A146.19 standard. Report discrepancies in writing to Architect and Contractor within 24 hours after inspection.

3.4 ADJUSTING

A. Comply with requirements of ANSI/BHMA A156.19 standard. Adjust automatic door operators to function smoothly, and lubricate as recommended by manufacturer.

3.5 DEMONSTRATION

A. Certified Installer's representative to provide eight (8) hours of training to Owner's maintenance personnel in the proper adjustment, operation, and maintenance of automatic door operators.

END OF SECTION

CONFORMED

SECTION 08 74 00

ACCESS CONTROL HARDWARE

PART 1 - GENERAL

1.1 RELATED DOCUMENTS

A. Drawings and general provisions of the Contract, including General and Supplementary Conditions and Division 1 Specification Sections, apply to this Section.

1.2 SUMMARY

A. This Section includes commercial door hardware for the following:

1. Swinging doors.
2. Sliding Doors
3. Other doors to the extent indicated.

B. Door hardware includes, but is not necessarily limited to, the following:

1. Mechanical door hardware.
2. Electromechanical door hardware.
3. Stand alone electronic access control door hardware.
4. Digital electronic cylinders.
5. Integrated Wiegand access control door hardware.
6. Wireless access control door hardware.
7. IP-enabled integrated access control door hardware.
8. Power transfer devices and wiring harnesses.
9. Monitoring and signaling equipment.
10. Access control cards and credentials.
11. Stand alone access control application software.
12. Electrified and access control door hardware power supplies, back-ups and surge protection.

C. Related Sections:

1. Division 08 Section “Door Hardware Schedule”.
2. Division 08 Section “Hollow Metal Doors and Frames”.
3. Division 08 Section “Interior Aluminum Doors and Frames”.
4. Division 08 Section “Clad Wood Doors”.
5. Division 08 Section “Aluminum-Framed Entrances and Storefronts”.
6. Division 08 Section “Door Hardware”.
7. Division 08 Section “Automatic Door Operators”.
8. Division 26 Sections for connections to electrical power system and for low-voltage wiring work.
9. Division 28 Sections "Access Control" for access control devices installed at door openings and provided as part of a security access system.
10. Division 28 Section "Intrusion Detection" for detection devices installed at door openings and provided as part of an intrusion detection system.

11. Division 28 Section "Fire Detection and Alarm" for connections to building fire alarm system.

D. Codes and References: Comply with the version year adopted by the Authority Having Jurisdiction.

1. ANSI A117.1 - Accessible and Usable Buildings and Facilities.
2. ICC/IBC - International Building Code.
3. NFPA 70 - National Electrical Code.
4. NFPA 80 - Fire Doors and Windows.
5. NFPA 101 - Life Safety Code.
6. NFPA 105 - Installation of Smoke Door Assemblies.
7. State Building Codes, Local Amendments.

E. Standards: All hardware specified herein shall comply with the following industry standards:

1. ANSI/BHMA Certified Product Standards – A156 Series.
2. UL10C – Positive Pressure Fire Tests of Door Assemblies.

F. Products installed, but not provided under this Section include the following. Coordination to remain a requirement of this Section.

1. Security or High Security keyed cylinders, including provisions for temporary construction keying, provided for mechanical override at access control locking hardware to be furnished under Division 08 Section "Door Hardware". Permanent cores and keys to be installed by Owner.

1.3 SUBMITTALS

A. Product Data: Manufacturer's product data sheets including installation details, material descriptions, dimensions of individual components and profiles, operational descriptions and finishes.

B. Door Hardware Schedule: Prepared by or under the supervision of supplier, detailing fabrication and assembly of door hardware, as well as procedures and diagrams. Coordinate the final Door Hardware Schedule with doors, frames, and related work to ensure proper size, thickness, hand, function, and finish of door hardware.

1. Format: Comply with scheduling sequence and vertical format in DHI's "Sequence and Format for the Hardware Schedule."

2. Organization: Organize the Door Hardware Schedule into door hardware sets indicating complete designations of every item required for each door or opening. Organize door hardware sets in same order as in the Door Hardware Sets at the end of Part 3. Submittals that do not follow the same format and order as the Door Hardware Sets will be rejected and subject to resubmission.

3. Content: Include the following information:

a. Type, style, function, size, label, hand, and finish of each door hardware item.
b. Manufacturer of each item.
c. Fastenings and other pertinent information.
d. Location of door hardware set, cross-referenced to Drawings, both on floor plans and in door and frame schedule.

e. Explanation of abbreviations, symbols, and codes contained in schedule.
f. Mounting locations for door hardware.
g. Door and frame sizes and materials.
h. System Operational Descriptions: Complete system operational narratives for access controlled openings defining the owner's prescribed requirements for the opening functionality. Narratives include, but are not limited to, the following situations: normal secured/unsecured state of door; authorized access; authorized egress; unauthorized access; unauthorized egress; fire alarm and loss of power conditions, and interfaces with other building control systems.

4. Submittal Sequence: Submit the final Door Hardware Schedule at earliest possible date, particularly where approval of the Door Hardware Schedule must precede fabrication of other work that is critical in the Project construction schedule. Include Product Data, Samples, Shop Drawings of other work affected by door hardware, and other information essential to the coordinated review of the Door Hardware Schedule.

C. Shop Drawings: Details of electrified access control hardware indicating the following:

1. Wiring Diagrams: Upon receipt of approved schedules, submit detailed system wiring diagrams for power, signaling, monitoring, communication, and control of the access control system electrified hardware. Differentiate between manufacturer-installed and field-installed wiring. Include the following:

a. Elevation diagram of each unique access controlled opening showing location and interconnection of major system components with respect to their placement in the respective door openings.
b. Complete (risers, point-to-point) access control system block wiring diagrams.

2. Electrical Coordination: Coordinate with related Division 26 Electrical Sections the voltages and wiring details required at electrically controlled and operated hardware openings.

3. Proof of Certification: Provide copy of manufacturer(s) official certification or accreditation document indicating proof of status as a qualified and authorized provider of the primary integrated access control components.

D. Keying Schedule: Reference Division 08 Section "Door Hardware".

E. Product Test Reports: Indicating compliance with cycle testing requirements, based on evaluation of comprehensive tests performed by manufacturer and witnessed by a qualified independent testing agency.

F. Operating and Maintenance Manuals: Provide manufacturers operating and maintenance manuals for each item comprising the complete standard door and access control hardware installation in quantity as required in Division 01, Closeout Submittals. The manual to include the name, address, and telephone number of the supplier/integrator providing the installation and the nearest service representatives for each item of equipment included in the system. The final copies delivered after completion of the installation test to include "as built" modifications made during installation, checkout, and acceptance.

1. As-Built Drawings: During system installation, the Contractor to maintain a separate hard copy set of drawings, elevation diagrams, and wiring diagrams of the access control system to be used for record drawings. This set to be kept up to date by the Contractor with all changes and additions to the access control system accurately recorded.

CONFORMED

G. Warranties and Maintenance: Special warranties and maintenance agreements specified in this Section.

1.4 QUALITY ASSURANCE

A. Manufacturers Qualifications: Engage qualified manufacturers with a minimum[5] years of documented experience in producing hardware and equipment similar to that indicated for this Project and that have a proven record of successful in-service performance.

B. Integrator Qualifications (Access Control Door Hardware): Systems Integrators, verifiably factory trained and certified by the primary product manufacturers, with a minimum[3] years documented experience installing complete access control systems hardware similar in material, design, and scope to that indicated for this Project and whose work has resulted in construction with a proven record of successful in-service performance. Qualifications include, but are not necessarily limited, to the following:

1. References: Provide a list of references for similar projects including contact name, phone number, name and type of project.
2. Professional Staffing: Firms to have a dedicated access control systems integration department with full time, experienced professionals on staff experienced in providing on site consulting services for both electrified door hardware and integrated access control systems installations.
3. Factory Training: Installation and service technicians are to be competent factory trained and certified personnel capable of maintaining the system.
4. Service Center: Firms to have a service center capable of providing training, in-stock parts, and emergency maintenance and repairs at the Project site with 24-hour/7-days a week maximum response time.

C. Supplier Qualifications: Supplier, verifiably authorized and in good standing with the primary product manufacturers, with a minimum[3] years experience supplying integrated access control systems similar in material, design, and scope to that indicated for this Project and whose work has resulted in construction with a proven record of successful in-service performance.

D. Integrated Wiegand Output, Wireless, and IP-Enabled access control products are required to be supplied and installed only through designated ASSA ABLOY "Authorized Channel Partner" (ACP) and “Certified Integrator” (CI) accounts.

E. Source Limitations: Obtain each type and variety of Door Hardware specified in this Section from a single source, qualified supplier unless otherwise indicated.

1. Electrified modifications or enhancements made to a source manufacturer's product line by a secondary or third party source will not be accepted.
2. Provide integrated access control door hardware from the same manufacturer as standard mechanical door hardware, unless otherwise indicated.

F. Regulatory Requirements: Comply with NFPA 70, NFPA 80, NFPA 101 and ANSI A117.1 requirements and guidelines as directed in the model building code including, but not limited to, the following:

1. NFPA 70 "National Electrical Code", including electrical components, devices, and accessories listed and labeled as defined in Article 100 by a testing agency acceptable to authorities having jurisdiction, and marked for intended use.

2. Where indicated to comply with accessibility requirements, comply with Americans with Disabilities Act (ADA), "Accessibility Guidelines for Buildings and Facilities (ADAAG)," ANSI A117.1 as follows:

    a. Handles, Pulls, Latches, Locks, and other Operating Devices: Shape that is easy to grasp with one hand and does not require tight grasping, tight pinching, or twisting of the wrist.
    b. Door Closers: Comply with the following maximum opening-force requirements indicated:

        1) Interior Hinged Doors: 5 lbf applied perpendicular to door.
        2) Fire Doors: Minimum opening force allowable by authorities having jurisdiction.

3. NFPA 101: Comply with the following for means of egress doors:

    a. Latches, Locks, and Exit Devices: Not more than 15 lbf to release the latch. Locks shall not require the use of a key, tool, or special knowledge for operation.

4. Fire-Rated Door Assemblies: Provide door hardware for assemblies complying with NFPA 80 that are listed and labeled by a testing and inspecting agency acceptable to authorities having jurisdiction, for fire ratings indicated, based on testing according to NFPA 252 (neutral pressure at 40" above sill) or UL-10C.

    a. Test Pressure: Positive pressure labeling.

5. The installed access control system shall conform to all local jurisdiction requirements.

G. Keying Conference: Reference Section 087100 “Door Hardware.”

H. Pre-Submittal Conference: Conduct coordination conference in compliance with requirements in Division 01 Section "Project Meetings" with attendance by representatives of Supplier(s), Installer(s), Systems Integrator(s), and Contractor(s) to review proper methods and procedures for receiving, handling, and installing door and access control hardware to manufacturer's recommendations and according to specifications.

1. Prior to installation of door hardware, arrange for manufacturers' representatives to hold a project specific training meeting to instruct the installing contractors' personnel on the proper installation and adjustment of their respective products. Product training to be attended by installers of door hardware (including electromechanical hardware) for aluminum, hollow metal and wood doors. Training will include the use of installation manuals, hardware schedules, templates and physical product samples as required.
2. Inspect and discuss electrical roughing-in, power supply connections, and other preparatory work performed by other trades.
3. Review sequence of operation narratives for each unique access controlled opening.
4. Review and finalize construction schedule and verify availability of materials.
5. Review the required inspecting, testing, commissioning, and demonstration procedures.

I. At completion of installation, provide written documentation that components were applied to manufacturer's instructions and recommendations and according to approved schedules.

1.5 DELIVERY, STORAGE, AND HANDLING

A. Inventory door hardware on receipt and provide secure lock-up and shelving for door hardware delivered to Project site. Do not store electronic access control hardware, software or accessories at Project site without prior authorization.

1. Access control firmware and software: Where approved and directed, inventory upon receipt and store electronic access control equipment in a secure, temperature and humidity controlled environment in original manufacturer's sealed containers.

B. Tag each item or package separately with identification related to the final Door Hardware Schedule, and include basic installation instructions with each item or package.

C. Deliver, as applicable, permanent keys, cylinders, cores, access control credentials, software and related accessories directly to Owner via registered mail or overnight package service. Instructions for delivery to the Owner shall be established at the "Keying Conference".

1.6 COORDINATION

A. Integrated Access Control Door Hardware and Electrical Coordination: Coordinate the layout and installation of scheduled integrated access control door hardware, and related access control equipment, with required connections to source power junction boxes, power supplies, detection and monitoring hardware and fire alarm system.

1. Access Control System Interface: The integrated access control hardware to interface and be connected to the access control system described under Division 28 "Access Control Systems". Coordinate the installation and configuration of the electrified door hardware and access control systems firmware and software with the hardware specified in this Section.

B. Templates: Obtain and distribute to the parties involved templates for doors, frames, and other work specified to be factory prepared for installing standard and electrified door hardware. Check Shop Drawings of other work to confirm that adequate provisions are made for locating and installing hardware to comply with indicated requirements.

C. Door and Frame Preparation: Related Division 08 Sections (Steel, Aluminum and Wood) doors and corresponding frames are to be prepared, reinforced and pre-wired (if applicable) to receive the installation of the specified electrified, monitoring, signaling and access control system hardware without additional in-field modifications.

1.7 WARRANTY

A. General Warranty: Reference Division 01, General Requirements. Special warranties specified in this Article shall not deprive Owner of other rights Owner may have under other provisions of the Contract Documents and shall be in addition to, and run concurrent with, other warranties made by Contractor under requirements of the Contract Documents.

B. Warranty Period: Written warranty, executed by manufacturer(s), agreeing to repair or replace components of standard and electrified door hardware that fails in materials or workmanship within specified warranty period after final acceptance by the Owner. Failures include, but are not limited to, the following:

1. Structural failures including excessive deflection, cracking, or breakage.

2. Faulty operation of the hardware.
3. Deterioration of metals, metal finishes, and other materials beyond normal weathering.
4. Electrical component defects and failures within the systems operation.

C. Standard Warranty Period: One year from date of Substantial Completion, unless otherwise indicated.

D. Special Warranty Periods:

1. Two years for electromechanical and integrated access control door hardware.
2. Five years for motorized electric latch retraction exit devices. Ten years for mortise locks and latches.

1.8 MAINTENANCE SERVICE

A. Maintenance Tools and Instructions: Furnish a complete set of specialized tools and maintenance instructions as needed for Owner's continued adjustment, maintenance, and removal and replacement of standard and access control door hardware.

B. Maintenance Service: Beginning at Substantial Completion, and running concurrent with the specified warranty period, provide continuous (6) months full maintenance including repair and replacement of worn or defective components, lubrication, cleaning, and adjusting as required for proper door opening operation. Provide parts and supplies as used in the manufacture and installation of original products.

1.9 SCOPE OF WORK

A. Access Control Site Management System: Furnish and install at the indicated locations the specified integrated access control door hardware for a completely operational access control and security site management system. System includes, but is not necessarily limited, to the following:

1. Electrified integrated access control locks and exit hardware, special tools, operating manuals, and required cabling and accessories as detailed below and listed in the Access Control Hardware Sets at the end of Part 3.

a. Provide manufacturer approved integrated access control locks and exit hardware that are functionally compatible with the specified access control equipment interfaces.

2. Owner to provide the following:

a. Owner will be responsible for ensuring that each computer hardware component includes the required interfaces, expansion boards, and peripherals that will be necessary to allow the system to operate as described within this specification and as indicated on the drawings.
b. Power Sourcing, Network Switches and Wireless Access Points: Quantity as required to accommodate installed access control (and video surveillance) devices.
c. Network Control Processor Connections:

1) LAN/Ethernet communication ports (jacks) and network interface cards as needed, CAT5e (CAT6) cabling from network router/switch to network

CONFORMED

control processor, outlet and cover plates and/or patch cables required for network connection within each designated IT/Telecom room.

2) Required static IP addresses.

3. Power Supplies, including battery, uninterrupted backup power supply (UPS) and separately fused surge protection, required for the integrated access control door hardware.

4. Installation, final configuration and commissioning of integrated access control door hardware, power supplies and related accessories.

5. Provide manufacturer required power controllers, interface boards, and programming that may be required for approved electric latch retraction exit devices supplied under Division 08 Section "Door Hardware."

6. Electrical contractor, Division 26, to provide the following:

   a. Source power wiring (120VAC) as required for the integrated access control door hardware and power supplies. This includes quad outlets as required on a dedicated circuit in the designated IT/Telecom room(s) and the related conduit, stub-in, junction boxes and connectors required for the source power delivery and connections.

   b. Provide required conduit, stub-in, junction and back boxes for the integrated access control door hardware at each access controlled opening per plan drawings and specs. Supply and install conduit between the aforementioned devices and between the electrical junction boxes, power supplies and access control equipment located on or above the door opening.

      1) At electrified hardware power transfers provide conduit on the secured side of the opening from the power transfer, thru-wire hinge, or serviceable panel location on the frame jamb to the related power supplies and access control equipment.

   c. Electrical Contractor to provide all 120VAC cabling connections and terminations from the electrical junction boxes to these electrical devices.

7. Access Control System Integrator to provide the following:

   a. Low voltage wiring (12/24VDC) and communication required for electrified and integrated access control door hardware, remote card readers, keypads, or display terminals, monitoring and signaling switches, and power supplies. Work includes related connectors, final terminations, and hook-ups required for a complete and functional access controlled opening in accordance with applicable codes and specified system operational narratives.

8. Final connections to fire alarm system, if required, by electrical and fire alarm system contractors.

9. Provide permits, submittals and approvals required by the authority having jurisdiction, prior to commencing with work.

PART 2 - PRODUCTS

2.1 SCHEDULED DOOR HARDWARE

A. General: Provide integrated access control door hardware and accessories for each designated opening to comply with requirements in this Section and with the Access Control Hardware Sets listed at the end of Part 3.

1. Access Control Hardware Sets: Requirements for quantity, item, model, design, grade, finish, size, and other distinctive qualities of each type of integrated door and access control hardware are indicated in the Access Control Hardware Sets at the end of Part 3.

B. Designations: Requirements for quantity, item, size, finish or color, grade, function, and other distinctive qualities of each type of mechanical and electrified door hardware are indicated in the Hardware Sets at the end of Part 3. Products are identified by using door hardware designations, as follows:

a. Named Manufacturer's Products: Product designation and manufacturer are listed for each door hardware type required for the purpose of establishing minimum requirements. Manufacturers' names are abbreviated in the Door Hardware Schedule.

C. System Design: The electrified door hardware specified to include standardized components regularly manufactured and utilized within the source manufacturer’s product lines.

1. Electronic integrated locking hardware to be non-proprietary in design and implementations, providing for an open protocol platform across multiple access control systems manufacturers and software applications. The installed integrated product is to be part of a single, cohesive access control system.

D. Substitutions: Requests for substitution and product approval for inclusive mechanical and electrified access control door hardware, in compliance with specifications, must be submitted in writing and in accordance with the procedures and time frames outlined in Division 01 "Substitution Procedures". Approval of requests is at the discretion of the architect, owner, and their designated consultants.

E. The electrified access control door hardware contained in this Section represents a complete engineered system. If alternate products are submitted, it is the responsibility of the Supplier to provide an acceptable complete and working system layout, including re-engineering of elevation and wiring diagrams, as applicable. Complete systems to include at a minimum the required power supplies, power transfers, and electrified and integrated locking hardware and accessories.

2.2 POWER TRANSFER DEVICES

A. Concealed Quick Connect Electric Power Transfers: Provide concealed wiring pathway housing mortised into the door and frame for low voltage electrified door hardware. Furnish with Molex™ standardized plug connectors and sufficient number of concealed wires (up to 12) to accommodate the electrified functions specified in the Door Hardware Sets. Connectors plug directly to through-door wiring harnesses for connection to electric locking devices and power supplies. Wire nut connections are not acceptable.

1. Acceptable Manufacturers:

a. Securitron (SU) - EL-CEPT Series.

A. Provide mortar guard enclosure on steel frames installed at masonry openings for each electrical hinge specified.

B. Electric Door Hardware Cords: Provide electric transfer wiring harnesses with standardized plug connectors to accommodate up to twelve (12) wires. Connectors plug directly to through-door wiring harnesses for connection to electric locking devices and power supplies. Provide sufficient number of concealed wires to accommodate electric function of specified hardware. Provide a connector for through-door electronic locking devices and from hinge to junction box above the opening. Wire nut connections are not acceptable. Determine the length required for each electrified hardware component for the door type, size and construction, minimum of two per electrified opening.

1. Acceptable Manufacturers:

a. McKinney Products (MK) - Inner Door Cord 3 inches: QC-C003P.
b. McKinney Products (MK) - Inner Door Cord 3 foot door: QC-C206P.
c. McKinney Products (MK) - Inner Door Cord 4 foot door: QC-C306P.
d. McKinney Products (MK) - Inner Door Cord 15 feet: QC-C1500P.
e. McKinney Products (MK) - Hinge to Junction Panel 15 feet: QC-C1500P.

Provide one each of the following tools as part of the base bid contract:

f. McKinney Products (MK) - Electrical Connecting Kit: QC-R001.
g. McKinney Products (MK) - Connector Hand Tool: QC-R003.

2.3 INTEGRATED WIEGAND OUTPUT ACCESS CONTROL LOCKS

A. Integrated Wiegand Output Mortise Locks: Wiegand output ANSI A156.13, Grade 1, mortise lockset with integrated card reader, request-to-exit signaling, door position status switch, and latchbolt monitoring in one complete unit. Hard wired, solenoid driven locking/unlocking control of the lever handle trim, 3/4" deadlocking anti-friction latch, and 1" case-hardened steel deadbolt. Lock is U.L listed and labeled for use on up to 3 hour fire rated openings. Available with or without keyed high security cylinder override.

1. Open architecture, hard wired platform supports centralized control of locking units with new or existing Wiegand compatible access control systems. Latchbolt monitoring and door position switch act in conjunction to report door-in-frame (DPS) and door latched (door closed and latched) conditions.
2. Reader supports either HID 125 kHz proximity (up to 39 bits, including Corporate 1000) or 13.56 MHz (2K-32K) iClass® credentials.
3. 12VDC external power supply required for reader and lock, with optional 24VDC operation available with iClass® reader (125 kHz reader is always 12VDC). Fail safe or fail secure options.
4. Installation requires only one cable run from the lock to the access control panel without requirements for additional proprietary lock panel interface boards or modules.
5. Installation to include manufacturer's access control panel interface board or module where required for Wiegand output protocol.

a. Acceptable Manufacturers:

1) Corbin Russwin Hardware (RU) - Access 600 - ML20600 RNE1 Series.
2) Sargent Manufacturing (SA) - Harmony - H1/H2 8200 Series.

2.4 INTEGRATED WIEGAND OUTPUT ACCESS CONTROL EXIT DEVICES

A. Wiegand Output Integrated Card Reader Exit Hardware: Wiegand output ANSI 156.3 Grade 1 rim, mortise, and vertical rod exit device hardware with integrated proximity card reader, latchbolt and touchbar monitoring, and request-to-exit signaling, in one complete unit. Hard wired, solenoid driven locking/unlocking control of the lever handle exit trim with 3/4" throw latch bolt. U.L listed and labeled for either panic or "fire exit hardware" for use on up to 3 hour fire rated openings. Available with or without keyed high security cylinder override.

1. Open architecture, hard wired platform supports centralized control of locking units with new or existing Wiegand compatible access control systems. Inside push bar (request-to-exit) signaling and door position (open/closed status) monitoring (via separately connected DPS).
2. Reader supports either HID 125 kHz proximity (up to 39 bits, including Corporate 1000) or 13.56 MHz (2K-32K) iClass® credentials.
3. 12VDC external power supply required for reader, with optional 24VDC operation available with iClass® reader (125 kHz reader is always 12VDC). 24VDC required for solenoid operated exit trim (12VDC if applicable). Fail safe or fail secure options.
4. Installation requires only one cable run from the exit hardware to the access control panel without requirements for additional proprietary lock panel interface boards or modules.
5. Competitor Alternates Allowed Option>Installation to include manufacturer's access control panel interface board or module where required for Wiegand output protocol.

6. Acceptable Manufacturers:

    a. Corbin Russwin Hardware (RU) - Access 600 - ED5000 RNE1 Series.
    b. Sargent Manufacturing (SA) - Harmony - H1/H2 80 Series.

2.5 WIRELESS ACCESS CONTROL EXIT DEVICES

2.6 ELECTRONIC ACCESSORIES

A. Key Switches: Key switches furnished standard with stainless steel single gang face plate with a 12/24VDC bi-color LED indicator. Integral backing bracket permits integration with any 1 1/4" or 1 1/2" mortise type cylinder. Key switches available as momentary or maintained action and in narrow face plate options.

1. Acceptable Manufacturers:

    a. Securitron (SU) - MK Series.

B. Power Supplies: Provide Nationally Recognized Testing Laboratory Listed 12VDC or 24VDC (field selectable) filtered and regulated power supplies. Include battery backup option with integral battery charging capability in addition to operating the DC load in event of line voltage failure. Provide the least number of units, at the appropriate amperage level, sufficient to exceed the required total draw for the specified electrified hardware and access control equipment.

1. Acceptable Manufacturers:

    a. Securitron (SU) - BPS Series.

2.7 CABLES AND WIRING

A. Comply with Division 27 Section "Conductors and Cables for Electronic Safety and Security."

B. Data Line Supervision: System to include alarm initiation capability in response to opening, closing, shorting, or grounding of data transmission lines.

C. Install appropriate number of conductor pairs, in the wire gage (AWG) recommended by manufacturer, corresponding to the electronic locking functions specified, amperage drawn and distances covered between the power supplies, power transfer devices, electrified hardware and access control equipment.

2.8 FABRICATION

A. Fasteners: Provide door hardware manufactured to comply with published templates generally prepared for machine, wood, and sheet metal screws. Provide screws according to manufacturers recognized installation standards for application intended.

2.9 ACCESS CONTROL HARDWARE FINISHES

A. Standard: Designations used in the Hardware Sets and elsewhere indicate hardware finishes complying with ANSI/BHMA A156.18, including coordination with traditional U.S. finishes indicated by certain manufacturers for their products.

B. Protect mechanical finishes on exposed surfaces from damage by applying a strippable, temporary protective covering before shipping.

C. Where specified, finishes on locksets, latchsets, exit devices and push/pull trim to incorporate an FDA recognized antimicrobial coating (MicroShield™) listed for use on equipment as a suppressant to the growth and spread of a broad range of bacteria, algae, fungus, mold and mildew.

PART 3 - EXECUTION

3.1 EXAMINATION

A. Examine scheduled openings, with Installer present, for compliance with requirements for installation tolerances, labeled fire door assembly construction, wall and floor construction, and other conditions affecting performance.

B. Examine roughing-in for electrical source power to verify actual locations of wiring connections before electrified and integrated access control door hardware installation.

C. Notify architect of any discrepancies or conflicts between the door schedule, door types, drawings and scheduled hardware. Proceed only after such discrepancies or conflicts have been resolved in writing.

3.2 PREPARATION

A. Doors and frames at scheduled access controlled openings to be properly prepared to receive specified electrified and access control hardware and connections without additional in-field modifications.

3.3 INSTALLATION

A. Install each item of mechanical and electromechanical hardware and access control equipment to comply with manufacturer's written instructions and according to specifications.

1. Installers are to be trained and certified by the manufacturer on the proper installation and adjustment of fire, life safety, and security products including: hanging devices; locking devices; closing devices; and seals.

B. Mounting Heights: Mount door hardware units at heights indicated in following applicable publications, unless specifically indicated or required to comply with governing regulations:

1. Standard Steel Doors and Frames: DHI's "Recommended Locations for Architectural Hardware for Standard Steel Doors and Frames."
2. Wood Doors: DHI WDHS.3, "Recommended Locations for Architectural Hardware for Wood Flush Doors."
3. Where indicated to comply with accessibility requirements, comply with ANSI A117.1 "Accessibility Guidelines for Buildings and Facilities."
4. Provide blocking in drywall partitions where wall stops or other wall mounted hardware is located.

C. Retrofitting: Install door hardware to comply with manufacturer's published templates and written instructions. Where cutting and fitting are required to install door hardware onto or into surfaces that are later to be painted or finished in another way, coordinate removal, storage, and reinstallation of surface protective trim units with finishing work specified in Division 9 Sections. Do not install surface-mounted items until finishes have been completed on substrates involved.

D. Storage: Provide a secure lock up for hardware delivered to the project but not yet installed. Control the handling and installation of hardware items so that the completion of the work will not be delayed by hardware losses before and after installation.

E. Boxed Power Supplies: Verify locations with Architect.

1. Configuration: Provide the least number of power supplies required to adequately serve doors with access control equipment.

F. Final connect the system control switches (integrated reader locking hardware, remote readers, keypads, etc.), and monitoring and signaling equipment to the related Controller devices at each opening to properly operate the electrified door and access control hardware according to system operational narratives.

G. Stand Alone System Application Software: Install, and test stand alone system application software for the complete and proper operation of systems involved.

H. Networked System Application Software: Reference Division 28 Section "Access Control Systems".

3.4 FIELD QUALITY CONTROL

A. Field Inspection: Perform a final inspection of the installed door hardware and access control system and state in report whether installed work complies with or deviates from requirements, including whether each component representing the opening assembly is properly installed, adjusted, operating and performing to system operational narratives.

B. Commissioning and Testing Schedule: Reference Division 28 Section "Access Control System."

3.5 ADJUSTING

A. Initial Adjustment: Adjust and check each operating item of door hardware and each door to ensure proper operation or function of every unit. Replace units that cannot be adjusted to operate as intended. Adjust door control devices to compensate for final operation of heating and ventilating equipment and to comply with referenced accessibility requirements.

3.6 CLEANING AND PROTECTION

A. Protect all hardware stored on construction site in a covered and dry place. Protect exposed hardware installed on doors during the construction phase. Install any and all hardware at the latest possible time frame.

B. Clean adjacent surfaces soiled by door hardware installation.

C. Clean operating items as necessary to restore proper finish. and provide final protection and maintain conditions that ensure door hardware is without damage or deterioration at time of owner occupancy.

3.7 DEMONSTRATION

A. Instruct Owner's maintenance personnel to adjust, operate, and maintain mechanical and electromechanical door hardware.

3.8 DOOR HARDWARE SCHEDULE

A. The hardware sets represent the design intent and direction of the owner and architect. They are a guideline only and should not be considered a detailed hardware schedule. Discrepancies, conflicting hardware and missing items should be brought to the attention of the architect with corrections made prior to the bidding process. Omitted items not included in a hardware set should be scheduled with the appropriate additional hardware required for proper application and functionality.

B. Refer to Section 080671, Door Hardware Schedule, for hardware sets.

END OF SECTION 087400

CONFORMED

SECTION 088100

SOLAR CONTROL COATED GLASS

PART 1 - GENERAL

1.1 SECTION INCLUDES

A. Double-Glazed Solar Control Insulating Glass Units.

1.2 RELATED SECTIONS

1.3 REFERENCES

A. ANSI Z 97.1 - Glazing Materials Used in Buildings, Safety Performance Specifications and Methods of Test.

B. ASTM C 1036 - Standard Specification for Flat Glass.

C. ASTM C 1048 - Standard Specification for Heat-Treated Flat Glass--Kind HS, Kind FT Coated and Uncoated Glass.

D. ASTM C 1376 - Standard Specification for Pyrolytic and Vacuum Deposition Coatings on Glass.

E. ASTM E 773 - Standard Test Method for Accelerated Weathering of Sealed Insulating Glass Units.

F. ASTM E 774 - Standard Specification for the Classification of the Durability of Sealed Insulating Glass Units

G. ASTM E 2188 – Standard Test Method for Insulating Glass Unit Performance.

H. ASTM E 2190 - Standard Specification for Insulating Glass Unit Performance and Evaluation.

I. CPSC 16CFR-1201 - Safety Standard for Architectural Glazing Materials.

J. Glass Association of North America (GANA) Glazing Manual.

1.4 DEFINITIONS

A. Sealed Insulating Glass Unit Surfaces:
   1. Surface No. 1: Exterior surface of outer lite.
   2. Surface No. 2: Interior surface of outer lite.
   3. Surface No. 3: Exterior surface of inner lite.
   4. Surface No. 4: Interior surface of inner lite.

B. Airspace: Space between lites of an insulating glass unit that contains dehydrated air or other inert specified gas.

1.5 SUBMITTALS

A. Comply with Section 01330 - Submittal Procedures.

B. Product Data: Submit manufacturer's product data, including performance characteristics and installation instructions.

C. Shop Drawings: Submit manufacturer's or fabricator's shop drawings, including plans, elevations, sections, and details, indicating glass dimensions, tolerances, types, thicknesses, and coatings.

D. Samples: Submit manufacturer's samples of each type, thickness, and coating.

E. Fabricator's Certification: Submit fabricator's certification by manufacturer.

F. Cleaning Instructions: Submit manufacturer's cleaning instructions.

G. Warranty: Submit manufacturer's standard warranty for sealed insulating glass units.

1.6 QUALITY ASSURANCE

A. Manufacturer's Qualifications: Minimum of 5 years experience manufacturing solar control coated glass.

B. Fabricator's Qualifications:
1. Minimum of 5 years experience manufacturing sealed insulating glass units meeting ASTM E 2190, Class CBA.
2. Certified by manufacturer.

C. Mock-Ups:
1. Comply with Section 01450 - Quality Control.
2. Obtain acceptance of mock-ups by Architect before proceeding with work.

1.7 DELIVERY, STORAGE, AND HANDLING

A. Delivery:
1. Deliver glass to site in accordance with manufacturer's instructions.
2. Deliver glass in manufacturer's or fabricator's original containers and packaging, with labels clearly identifying product name and manufacturer.

B. Storage:
1. Store glass in accordance with manufacturer's instructions.
2. Store glass in clean, dry area indoors.
3. Protect from exposure to direct sunlight and freezing temperatures.
4. Apply temporary coverings loosely to allow adequate ventilation.
5. Protect from contact with corrosive chemicals.
6. Avoid placement of glass edge on concrete, metal, and other hard objects.
7. Rest glass on clean, cushioned pads at 1/4-points.

C. Handling:
1. Handle glass in accordance with manufacturer's instructions.
2. Protect glass from damage during handling and installation.
3. Do not slide 1 lite of glass against another.
4. Do not use sharp objects near unprotected glass.

PART 2 - PRODUCTS

2.1 MANUFACTURER

A. Basis of Design: Guardian Industries Corp., 14600 Romine Road, Carleton, Michigan 48117. Toll Free (800) 521-9040. Phone (734) 654-6264. Fax (734) 654-0935. Web Sites www.guardian.com, www.sunguardglass.com.

B. Equivalent products by the following manufacturers are acceptable

a. Oldcastle Building Envelope
b. PPG Industries, Inc.
c. Viracon, Inc.

C. Substitutions:
1. Not permitted.

2.2 FABRICATORS

A. Sealed Insulating Glass Units, Heat-Strengthened Glass, Tempered Glass, and Spandrel Glass:
1. Acceptable Fabricators: Certified by Guardian Industries Corp. to fabricate SunGuard Solar Control Coated Glass products.

2.3 GLAZING SCHEDULE: SOLAR CONTROL INSULATING COATED GLASS

A. Glazing Type 1 - Double-Glazed Sputter-Coated Insulating Glass Units:

1. Conformance: ASTM E 2190, Class CBA.
2. Outboard Lite: Sputter-coated green-tinted float glass.
   a. Annealed Green-Tinted Float Glass: ASTM C 1036, Type 1, Class 2, Quality q3.
   b. Vacuum Deposition Sputtered Coating: ASTM C 1376.
   c. Coating on Surface No. 2: SunGuard Silver 20.
   d. Glass Thickness: 6 mm (1/4 inch).
   e. Heat Treatment: Tempered; ASTM C 1048, Kind FT; CPSC 16CFR-1201; ANSI Z 97.1.
3. Air Space: 12 mm (1/2 inch) wide, hermetically sealed, dehydrated air space.
4. Inboard Lite: Clear float glass.
   a. Annealed Clear Float Glass: ASTM C 1036, Type 1, Class 1, Quality q3.
   b. Glass Thickness: 6 mm (1/4 inch).
   c. Heat-Treatment: Tempered; ASTM C 1048, Kind FT; CPSC 16CFR-1201; ANSI Z 97.1.
5. Glass Unit Performance Characteristics:
   a. Visible Light Transmittance: 15 percent
   b. Visible Light Reflectance Outdoors: 24 percent
   c. Direct Solar Energy Transmittance: 8 percent
   d. Direct Solar Energy Reflectance Outdoors: 13 percent
   e. Winter U-Value Nighttime: 0.39
   f. Summer U-Value Daytime: 0.41
   g. Shading Coefficient: 0.21
   h. Solar Heat Gain Coefficient: 0.19
   i. Summer Relative Heat Gain: 48
6. Edge Seals: ASTM E 773, with aluminum spacers and silicone sealant for glass-to-spacer seals.

7. Sealant: Approved by glass manufacturer.

B. Glazing Type 2 - Double-Glazed Sputter-Coated Insulating Glass Units:

1. Conformance: ASTM E 2190, Class CBA.
2. Outboard Lite: Sputter-coated clear float glass.
   a. Annealed Clear Float Glass: ASTM C 1036, Type 1, Class 1, Quality q3.
   b. Vacuum Deposition Sputtered Coating: ASTM C 1376.
   c. Coating on Surface No. 2: SunGuard SNX 62/27 (SNX 62/27).
   d. Glass Thickness: 6 mm (1/4 inch).
   e. Heat Treatment: Tempered where indicated or required by CBC 2406; ASTM C 1048, Kind FT; CPSC 16CFR-1201; ANSI Z 97.1 .
3. Air Space: 12 mm (1/2 inch) wide, hermetically sealed, dehydrated air space.
4. Inboard Lite: Clear float glass.
   a. Annealed Clear Float Glass: ASTM C 1036, Type 1, Class 1, Quality q3.
   b. Glass Thickness: 6 mm (1/4 inch).
   c. Heat-Treatment: Tempered where indicated or required by CBC 2406; ASTM C 1048, Kind FT; CPSC 16CFR-1201; ANSI Z 97.1 .
5. Glass Unit Performance Characteristics:
   a. Visible Light Transmittance: 62 percent
   b. Visible Light Reflectance Outdoors: 11 percent
   c. Direct Solar Energy Transmittance: 23 percent
   d. Direct Solar Energy Reflectance Outdoors: 39 percent
   e. Winter U-Value Nighttime: 0.29
   f. Summer U-Value Daytime: 0.27
   g. Shading Coefficient: 0.31
   h. Solar Heat Gain Coefficient: 0.27
   i. Summer Relative Heat Gain: 65
6. Edge Seals: ASTM E 773, with aluminum spacers and silicone sealant for glass-to-spacer seals.
7. Sealant: Approved by glass manufacturer.

PART 3 - EXECUTION

3.1 EXAMINATION

A. Examine areas to receive glass. Notify Architect of conditions that would adversely affect installation. Do not proceed with installation until unsatisfactory conditions are corrected.

3.2 PREPARATION

A. Verify glazing openings are correct size and within tolerance.

B. Verify glazing channels, recesses, and weeps are clean and free of obstructions.

3.3 GLAZING

A. Install glass in accordance with manufacturer's instructions, except where local codes or GANA Glazing Manual indicate more stringent requirements.

3.4 FIELD QUALITY CONTROL

A. Coated glass, when viewed from minimum of 10 feet, exhibiting slightly different hue or color not apparent in hand samples, will not be cause of rejection of glass units, as determined by Architect.

B. Verify glass is free of chips, cracks, and other inclusions that could inhibit structural or aesthetic integrity.

3.5 CLEANING

A. Clean glass promptly after installation in accordance with manufacturer's instructions.

B. Remove labels from glass surface.

C. Do not use harsh cleaning materials or methods that would damage glass.

3.6 PROTECTION

A. Protect installed glass from damage during construction.

B. Protect installed glass from contact with contaminating substances resulting from construction operations.

C. Remove and replace glass that is broken, chipped, cracked, abraded, or damaged in other ways during construction period, including natural causes, accidents, and vandalism.

END OF SECTION

CONFORMED

SECTION 09 24 00

PORTLAND CEMENT PLASTERING

PART 1 GENERAL

1.1 SECTION INCLUDES

A. Metal furring and lathing.

B. Building wrap (weather-resistive barrier) under metal lath, and over sheathing.

1. Provide a two-layer building wrap system as follows:

a. One layer of kraft building paper over one layer of HDPE product.

b. Flashing as recommended by building wrap manufacturer.

C. Three-coat Portland cement plaster system with integral color acrylic finish coat.

1.2 RELATED SECTIONS

A. Division 01 – General Requirements

B. Section 05 40 00 – Cold-Formed Metal Framing.

C. Section 07 25 00 – Weather Barriers.

D. Section 07 92 00 – Joint Sealers.

E. Section 09 29 00 – Gypsum Board:

1.3 REFERENCES

A. The publications listed below form a part of this Section to the extent referenced. The publications are referred to in the text by the basic designation only. Refer to Section 01 42 00 for definitions, acronyms, and abbreviations.

B. Unless otherwise noted, standards, manuals, and codes refer to the latest edition of such standards, manuals, and codes as of the date of issue of this Project Manual.

C. Referenced Standards:

1. ASTM A641/A641M – Standard Specification for Zinc-Coated (Galvanized) Carbon Steel Wire.
2. ASTM A653/A653M – Standard Specification for Steel Sheet, Zinc-Coated (Galvanized) or Zinc-Iron Alloy-Coated (Galvannealed) by the Hot-Dip Process.
3. ASTM C150 – Standard Specification for Portland Cement.
4. ASTM C897 – Standard Specification for Aggregate for Job-Mixed Portland Cement-Based Plasters.
5. ASTM C926 – Standard Specification for Application of Portland Cement-Based Plaster.
6. ASTM C954 – Standard Specification for Steel Drill Screws for the Application of Gypsum Panel Products or Metal Plaster Bases to Steel Studs From 0.033 in. (0.84 mm) to 0.112 in. (2.84 mm) in Thickness.

7. ASTM C1002 – Standard Specification for Steel Self-Piercing Tapping Screws for the Application of Gypsum Panel Products or Metal Plaster Bases to Wood Studs or Steel Studs.
8. ASTM C1063 – Standard Specification for Installation of Lathing and Furring to Receive Interior and Exterior Portland Cement-Based Plaster.
9. ASTM D412 – Standard Test Methods for Vulcanized Rubber and Thermoplastic Elastomers – Tension.
10. ASTM D1308 – Standard Test Method for Effect of Household Chemicals on Clear and Pigmented Organic Finishes.
11. ASTM D1653 – Standard Test Methods for Water Vapor Transmission of Organic Coating Films.
12. ASTM D4060 – Standard Test Method for Abrasion Resistance of Organic Coatings by the Taber Abraser.
13. ASTM D4541 – Standard Test Method for Pull-Off Strength of Coatings Using Portable Adhesion Testers.
14. ASTM E84 – Standard Test Method for Surface Burning Characteristics of Building Materials.
15. ASTM G155 – Standard Practice for Operating Xenon Arc Light Apparatus for Exposure of Non-Metallic Materials.
16. FS TT-C-555 – Coating, Textured (for Interior and Exterior Masonry Surfaces).

1.4 SUBMITTALS

A. Submit product data under provisions of Division 01.

B. Provide product data on building wrap, furring and lathing components, plaster materials, characteristics and limitations of products specified, and plastering accessories.

C. Submit manufacturer's installation instructions under provisions of Section 01 33 00.

D. Provide two 12 inch x 12 inch samples of plaster system for each type of color and texture scheduled for installation.

1.5 QUALITY ASSURANCE

A. Applicator: Company specializing in cement plaster work sufficient documented experience.

B. Apply cement plaster in accordance with ASTM C926.

1.6 DELIVERY, STORAGE AND HANDLING

A. Delivery, storage and handling in accordance with provisions of Section 01 60 00.

1. Deliver manufactured products to job site in their original unopened containers with labels intact and legible at the time of use.
2. Do not permit scattering of materials or equipment but use necessary means to ensure neatness of the site and structure at all times.
3. Perform cleaning of tools and equipment only in the area designated for that purpose.

B. Protection: Use means necessary to protect lath and plaster materials before, during and after installation and to protect the installed work and materials of other trades.

C. Replacements: In the event of damage, immediately make repairs and replacements necessary to the approval of the Architect and at no additional cost to Owner.

1.7 ENVIRONMENTAL REQUIREMENTS

A. Do not apply plaster when substrate or ambient air temperature is less than 50 degrees F nor more than 90 degrees F. If freezing is expected within the next 12 hours, do not apply plaster.

B. Maintain minimum ambient temperature of 50 degrees F during and after installation of plaster.

C. Protect plaster from uneven and excessive evaporation during any weather conditions.

PART 2 PRODUCTS

2.1 PLASTER MATERIALS

A. Cement: ASTM C150, Normal – Type I-II, low alkali; gray color; Portland Cement with integral PRF admixture as manufactured by Omega-Products International (Super Cement), Hanson (Premium Cement) or accepted equal.

B. Aggregate: In accordance with ANSI/ASTM C897, except that gradation shall meet the following requirements:

Sieve Size	Percent Retained on each sieve (by weight)	
	Maximum	Minimum
No. 4	0	—
No. 8	10	0
No. 16	40	10
No. 30	65	30
No. 50	90	70
No. 100	100	90-95

The sand should have more than 50% retained between any two consecutive sieves nor more than 25% between Nos. 50 and 100 sieves.

C. Water: Clean, fresh, potable and free of mineral or organic matter that can affect plaster system components.

D. Acrylic Finish Coat: Vapor permeable, 100% acrylic polymer finish coat with crushed mineral aggregates, meeting the following performance criteria:

Property	Test Method	Results
Adhesion to concrete	ASTM D4541	100 psi
Vapor permeability	ASTM D1653	
	Method A	3. dry perms
	Method B	9.7 wet perms
Abrasion resistant (1000 cy)	ASTM D4060	6.8% weight loss
Tensile strength	ASTM D412	
Nontextured film		200 psi
Textured film		20psi
Elongation	ASTM D412	

Nontextured film		30%
Wind driven rain	Federal Spec TT-C-555B	Pass
Accelerated weathering 2000 hours	ASTMG155	No cracking, blistering, checking or adhesion loss
Freeze-thaw resistance of dry film (25 cy)	Lab method	Pass
Dirt pickup	Lab method	None
Chemical resistance	ASTM D1308	Good resistance to mild acids, alkalis and salts
Flame Spread	ASTM E84	15 maximum
Smoke Developed	ASTM E84	10 maximum

1. Acceptable manufacturers:
   a. Omega Akroflex.
   b. Dryvit
   c. ParexLaHabra
   d. Substitutions: Under provisions of Section 01 60 00.
2. Color and Texture: Fine sand float finish – See architectural drawings for colors.
3. Accessories
   a. Leveler and primer as manufactured by the finish coat manufacturer.

2.2 FURRING AND LATHING

A. Metal Lath at vertical surfaces: Self furred grooved expanded metal flat diamond mesh; weighing 3.4 pounds per square yard; continuous horizontal grooves 1/4 inch deep at 6-3/16 inches on center; galvanized finish as manufactured by Clark Western Building Systems, Amico or accepted equal.

B. Metal Lath corner reinforcement at exterior corners: Self furring expanded metal flat diamond mesh; weighing 3.4 pounds per square yard; galvanized finish as manufactured by Clark Western Building Systems, Amico or accepted equal.

C. Expanded Corner Bead: Formed steel, minimum 26 gauge thick, shaped to permit complete embedding in plaster; galvanized finish; No. 1A as manufactured by Clark Western Building Systems, Amico or accepted equal.

D. Casing Beads: Formed steel, minimum 26 gauge thick; of longest possible length; sized and profiled to suit application; galvanized finish; No. 66 casing bead as manufactured by Clark Western Building Systems, Amico or accepted equal.

E. Weep Screeds: Formed steel, minimum 26 gauge thick; square flange, 3-1/2 inch high leg, of longest possible length; sized and profiled to suit application; galvanized finish; No. 7 foundation sill screed as manufactured by Clark Western Building Systems, Amico or accepted equal.

F. Control Joints: Formed steel; minimum 26 gauge accordion profile, expanded metal flanges each side; of longest possible length; sized and profiled to suit application; galvanized finish; No. XJ 15-3, as manufactured by Clark Western Building Systems, Amico or accepted equal.

G. Expansion Joints: Formed steel, minimum 26 gauge thick; of longest possible length; sized and profiled to suit application; galvanized finish; No. 40 adjustable expansion joint as manufactured by Clark Western Building Systems, Amico or accepted equal.

H. Strip Mesh at horizontal surfaces and corners of openings: Expanded metal flat diamond; weighing 3.4 pounds per square yard; galvanized finish; 4 inches wide as manufactured by Clark Western Building Systems, Amico or accepted equal.

I. Soffit Vent: 26 gauge, ASTM: A653 LFQ galvanized finish, perforated with 1/8" Vent Holes, Series SVR Soffit Vent/Reveal Screed as manufactured by Stockton Products, Amico or accepted equal.

J. Soffit Drip Mold: No. 5 stucco stop, galvanized finish, as manufactured by Clark Western Building Systems, Amico or accepted equal.

K. Substitutions: Under provisions of Division 01.

2.3 LATH ANCHORAGES

A. Anchorages at metal framing: Install galvanized # 8 wafer head screws at 6 inches on center vertically at each stud x length as required for embedment into framing members.

1. ASTM C954, self-drilling and self tapping screws for heavy gage steel framing (0.033 inch to 0.112 inch thick).
2. ASTM C1002, self drilling and self tapping screws for light gage steel framing (less than 0.033 inch thick).

2.4 BUILDING WRAP

A. Building wrap to consist of two layers; one layer of kraft building paper installed over one layer of HDPE product.

B. HDPE and Flexible Flashing Products: Refer to Section 07 25 00.

C. Kraft Building Paper: Grade D (water-vapor-permeable, kraft building paper).

1. Properties: Product to meet or exceed Grade D requirements:
   a. Perm Rating: 30 or more per ASTM E96.
   b. Tensile Strength: 33/41 lbs/in.; tested in accordance with ASTM D 822, Method A.
   c. Water Penetration Test: Minimum 235 cm AATCC-127.
   d. Surface Burning Characteristics: Class I (NFPA Class A) per ASTM E84.
      1) Flame Spread: 15 per ASTM E84.
      2) Smoke Developed: 25 per ASTM E84.

2.5 CEMENT PLASTER MIXES

A. Mix and proportion cement plaster as follows:

1. Scratch coat proportions: One part Portland cement, four parts aggregate and 3 oz. PRF admixture.
2. Brown coat proportions: One part Portland cement, five parts aggregate and 3 oz. PRF admixture.

3. Finish coat proportions: Per manufacturer's recommendations.

B. Mix only as much plaster as can be used in one hour.

C. Mix materials dry, to uniform color and consistency, before adding water.

D. Protect mixtures from frost, contamination, and evaporation.

E. Do not retemper mixes after initial set has occurred.

2.6 SEALANTS

A. Sealants used in conjunction with the scratch, brown and finish coats shall only be the type recommended by the product manufacturer(s).

PART 3 EXECUTION

3.1 INSPECTION

A. Verify that surfaces and site conditions are ready to receive work.

B. Inspect the installed work of other trades and verify that such work is complete to the point work of this section may begin.

C. Verify that substrate is plumb, level, square and aligned.

D. Report in writing conditions which might adversely affect the performance of installed lath and plaster to the Architect.

E. Beginning of installation means acceptance of existing conditions.

3.2 PREPARATION

A. Protect surfaces near the work of this Section from damage or disfiguration.

3.3 BUILDING WRAP (WEATHER RESISTIVE BARRIER) INSTALLATION

A. Apply two-layer building wrap (weather resistive barrier) as indicated on Drawings. Install one layer of kraft building paper over one layer of HDPE product.

B. HDPE and Flexible Flashing Product Installation: Refer to Section 07 25 00.

C. Kraft Building Paper Installation: Apply kraft building paper over HDPE product, horizontally with a 3-inch overlap and a 6-inch end lap; and fasten in place. Joints to be staggered over HDPE product joints.

1. Extend into jambs of openings and seal corners with tape.

2. Seal fasteners and penetrations with compatible sealing tape.

3.4 INSTALLATION – LATHING MATERIALS

A. Install metal plaster bases and accessories in conformance with ASTM C1063. All vertically placed accessories shall be installed continuously; breaks shall occur at horizontally placed accessories only.

B. Attach metal lath to framing members at maximum 6 inches on center.

C. Lath shall be installed as specified in Section 2510 and Table 2511.1.1 of the CBC for wire fabric lath. The lath shall be installed with the cross wires parallel to the framing and shall be attached with fasteners at the furring crimps.

D. Lath shall stand off substrate immediately behind the lath a minimum of 1/4 inch per CBC Table 2511.1.1.

E. Continuously reinforce internal angles with additional layer of lath, 6 inches wide minimum, except where the metal lath returns 3 inches from corner to form the angle reinforcement. Fasten at perimeter edges only.

F. Place corner bead with mesh at corners. Attach with fasteners as recommended by manufacturer, spaced not more than 18 inches on center. Fasten at outer edges only.

G. Place minimum 4 inch wide strip mesh diagonally at corners of lathed openings. Secure rigidly in place. Extend minimum 8 inches diagonally each direction from point of corner.

H. Place casing beads at terminations of plaster finish. Butt and align ends. Secure rigidly in place.

I. Install accessories to lines and levels.

3.5 CONTROL JOINTS

A. At stud framing, locate exterior control joints every 12 feet in each direction, or as indicated on the Drawings. Install on top of metal lath and attach by wiring to metal lath.

3.6 EXPANSION JOINTS

A. At stud framing, locate exterior expansion joints at building expansion joints. Cut the metal lath and install the metal lath over the flanges of the expansion joint. Fasten only one flange of the expansion joint to the framing; allow the other flange to float.

3.7 PLASTERING

A. Apply plaster in accordance with ASTM C926.

B. Apply scratch coat to a nominal thickness of 3/8 inch over metal reinforcement. Cover metal reinforcement.

1. After application, lightly score scratch coat horizontally.
2. If brown coat cannot be applied within four hours, keep scratch coat moist for 48 hours before applying brown coat.

C. Apply brown coat to a nominal thickness of 3/8 inch over scratch coat. Rod brown coat straight and true in all directions.

D. Moist cure brown coat for minimum seven days before applying finish coat.

E. At exterior corners, the finish coat shall be applied so that the nose wire is covered with a minimum of 1/8 inch of plaster.

3.8 ACRYLIC FINISH COAT

A. Surface Preparation

1. Surfaces to receive acrylic finishes must be structurally sound, clean and dry. Concrete, masonry and cement plaster base coats must be properly cured and free of all grease, mildew, fungus, efflorescence and any other contaminant.
2. Contaminants must be removed by wire brush, pressure washing or sandblasting. Efflorescence shall be removed by a diluted acid wash and rinse.
3. Loose deteriorated stucco and concrete must be removed and repaired. Soft, dry dusty surfaces must be properly treated to insure adhesion of acrylic finish.
4. Apply sealant as recommended by finish coat manufacturer where appropriate at terminations and the junctions of dissimilar materials.
5. Apply a leveler as necessary to achieve a flat surface prior to the application of the finish coat. The leveler shall be manufactured by the same manufacturer as the finish coat and shall be compatible for use with the plaster brown coat, the primer and the acrylic finish coat.

B. Priming:

1. Apply primer to all repaired, patched or chalking surfaces. An existing coating totally free of chalking does not require priming.
2. For improved finish coverage and workability, apply primer over Portland cement base coats.
3. Allow 24 hours for primer to dry before application of acrylic finish coats.
4. Primer shall be from the same manufacturer as the finish coat manufacturer.

C. Application:

1. Refer to manufacturer's instructions for application of leveler, primer and acrylic finish.
2. The finish coat shall be applied and leveled to the minimum required thickness in the same application.
   a. The finish coat shall be applied and textured continually over the wall surface in order to maintain a wet edge and provide a uniform appearance.
   b. Work to corners or joints and do not allow the partially applied material to set up within a distinct wall area.
   c. Achieve the final texture by using trowels or floats with a variety of motions to create the specified texture and to match approved samples.

3.9 TOLERANCES

A. Maximum Variation from True Flatness: 1/8 inch in 5 feet, properly meeting adjacent surfaces and materials.

3.10 CLEAN UP

A. Promptly remove and clean plaster from all surfaces not scheduled to receive this finish. Verify cleaning recommendations from each substrate manufacturer prior to proceeding with any cleaning operations.

B. Clean up and remove from the site all excess and waste materials generated by the installation of the plaster system.

END OF SECTION

CONFORMED

SECTION 09 29 00

GYPSUM BOARD

PART 1 GENERAL

1.1 SUMMARY

A. Section Includes:
1. Acoustical insulation.
2. Gypsum board.
3. Cementitious panels.
4. Taping and bedding of gypsum board.

B. Related Sections:
1. Division 01: General Requirements
2. Section 07 9200 - Joint Sealers.

1.2 REFERENCES

A. American National Standards Institute (ANSI):
1. A108.11 - Interior Installation of Cementitious Backer Units.
2. A118.9 - Test Methods and Specifications for Cementitious Backer Units.

B. ASTM International (ASTM):
1. C475 - Standard Specification for Joint Compound and Joint Tape for Finishing Gypsum Board.
2. C514 - Standard Specification for Nails for the Application of Gypsum Wallboard.
3. C665 - Standard Specification for Mineral Fiber Blanket Thermal Insulation for Wood Frame and Light Construction Buildings.
4. C1002 - Standard Specification for Steel Drill Screws for the Application of Gypsum Board.
5. C1047 - Standard Specifications for Accessories for Gypsum Wallboard and Gypsum Veneer Base.
6. C1178 - Standard Specification for Glass Mat Water-Resistant Gypsum Backing Panel.
7. C1396 - Standard Specification for Gypsum Board.
8. C1629 - Standard Classification for Abuse-Resistant Nondecorated Interior Gypsum Panel Products and Fiber-Reinforced Cement Panels.
9. D3273 - Standard Test Method for Resistance to Growth of Mold on the Surface of Interior Coatings in an Environmental Chamber.
10. E90 - Standard Test Method for Airborne Sound Transmission Loss of Building Partitions.
11. E413 - Standard Test Method for Classification for Rating Sound Insulation.

C. Gypsum Association (GA):
1. GA-214 - Levels of Gypsum Board Finish.
2. GA-216 - Recommended Specifications for the Application and Finishing of Gypsum Board.
3. GA-600 - Fire Resistance Design Manual.

D. Underwriters Laboratories, Inc. (UL) - Fire Resistance Directory.

1.3 SUBMITTALS

A. Submittals for Review:
1. Product Data: Illustrate panel product types, thicknesses, and locations; acoustical insulation; and accessories.

1.4 QUALITY ASSURANCE

A. Fire Resistance Ratings:
   1. Construct assemblies to achieve fire resistance ratings indicated on Drawings, in accordance with applicable GA or U design number.
   2. If requirements of assembly numbers referenced conflict with Contract Document requirements, conform to assembly requirements.

B. Acoustic Ratings: Construct assemblies to achieve acoustic ratings indicated on Drawings, tested to ASTM E90 and classified in accordance with ASTM E413.

1.5 PROJECT CONDITIONS

A. Do not install gypsum board until building is substantially weathertight.

B. Maintain temperature in spaces in which work is being performed above [50] [__] degrees F during and after installation.

PART 2 PRODUCTS

2.1 MANUFACTURERS

A. Acceptable Manufacturers - Gypsum Panels:
   1. CertainTeed Gypsum, Inc.
   2. GP Gypsum Corporation.
   3. National Gypsum Co.
   4. Temple-Inland.
   5. USG Corporation.

B. No Substitutions

C. Acceptable Manufacturers - Cementitious Panels:
   1. James Hardie Building Products, Inc.

D. Substitutions: Under provisions of Division 01

2.2 MATERIALS - GYPSUM PANELS

A. Regular Gypsum Board: ASTM C1396; 48 inches wide x 5/8 inch thick, or thickness as indicated in drawings, maximum practical length, tapered edge.

B. Impact-Resistant Gypsum Board: ASTM C1396 and ASTM C1629, Classification Level [I,] [2,] [3]; 48 inches wide x 5/8 inch thick, maximum practical length, tapered edge; apply to walls where indicated.

C. Water Resistant Gypsum Board: ASTM C1396; 48 inches wide x 5/8 inch thick, maximum practical length, water resistant; apply to walls to receive tile, sanitary wall panels, and walls at janitor closets and toilet rooms.

2.3 MATERIALS - CEMENTITIOUS PANELS

A. Cementitious Panels: ANSI A 118.9, high density, cementitious with glass fiber reinforcing, 5/8 inch thick x 48 inches wide, maximum practical length, ends and edges square cut.

2.4 ACCESSORIES

A. Fasteners: ASTM C1002, Type W and S Screws, minimum 5/8 inch penetration into wood framing.

B. Acoustical Insulation:

1. ASTM C665, Type I, glass fiber composition, unfaced.
2. Free from urea-formaldehyde resins, phenol, acrylics, and artificial colors.

C. Adhesive:
1. Type recommended by gypsum panel manufacturer.

D. Trim Accessories: ASTM C1047.

1. Corner reinforcement: GA-216, Type CB-100 x 100.
2. Casing: GA-216, Type LC.
3. Control joint.

E. Acoustical Sealer: Specified in Section 07 9200.

F. Joint Treatment Materials:
1. Reinforcing tape and joint compound; ASTM C475.

PART 3 EXECUTION

3.1 INSTALLATION OF GYPSUM PANELS

A. Install panels and accessories in accordance with ASTM C754, GA-216, and manufacturer's instructions.

B. Accurately cut panels to fit around openings and projections. Do not tear face paper or break gypsum core.

C. Apply panels [at non fire-rated assemblies] in most economical manner, with ends and edges occurring over supports.

D. Apply panels at fire-rated assemblies as required by design assembly.

E. Stagger joints on opposite sides of partitions.

F. Do not locate joints to align with edges of openings unless a control joint is installed.

G. Mechanically fasten panels to framing. Place fasteners minimum 3/8 inch from edges of panels; drive heads slightly below surface. Stagger fasteners at abutting edges.

H. Apply face layer of double layer applications with joints offset from those in base layer; secure with mechanical fasteners to framing or with adhesive to base layer.

I. At deflection compensating head tracks, cut panels 1/2 inch short of structure at head; do not secure panels to top runner channel.

J. Treat cut edges and holes in moisture resistant gypsum board with joint sealer.

K. Where recessed items occur in fire rated partitions, box item on all sides with gypsum board as required to maintain continuity of fire rating.

3.2 INSTALLATION OF ACOUSTICAL PARTITIONS

A. Extend acoustical partitions past intersecting non-acoustical partitions.

B. Install acoustical insulation:
1. Butt to framing members and adjacent construction.
2. Carry around pipes, wiring, outlets, and other construction without voids.
3. Press against one gypsum board surface to form slight air space on opposite side.

C. Seal acoustical partitions at perimeter and around penetrations:
   1. Apply continuous bead of sealer between gypsum panel edges and adjacent construction.
   2. Seal space between gypsum panels at control joints, prior to installing metal control joint.
   3. Apply sealer to penetrations through partitions.

3.3 INSTALLATION OF ACOUSTICAL INSULATION ABOVE CEILINGS

A. Install acoustical insulation in continuous layer. Butt tightly to adjacent insulation and to other construction.

B. Carry over pipes, wiring, boxes, and other construction without voids.

3.4 INSTALLATION OF CEMENTITIOUS PANELS

A. Install in accordance with ANSI A108.11 and manufacturer's instructions.

B. Apply panels horizontally, with ends occurring over supports. Stagger end joints in adjacent rows.

C. Cut panels to fit around openings and projections.

D. Mechanically fasten panels to framing at maximum 12 inches on center.

3.5 INSTALLATION OF ACCESSORIES

A. Install in accordance with manufacturer's instructions.

B. Install corner reinforcement at outside corners. Use single lengths where length of corner does not exceed standard length.

C. Install casings where indicated and where gypsum board abuts dissimilar materials or stops with edge exposed.

D. Install control joints at ceilings:
   1. Where indicated on drawings

E. Install control joints at walls and partitions:
   1. At changes in backup material.

3.6 JOINT TREATMENT

A. Treat joints and fasteners in gypsum board in accordance with GA-214.

B. Levels of Finish:
   1. Surfaces to receive tile or stone: Level 2 finish.
   2. Surfaces to receive flat, eggshell paints or wall coverings, or as indicated: Level 4 finish.
   3. Surfaces to receive semigloss, gloss paints, or as indicated: Level 5 finish.
   4. See construction documents for additional information and specific locations for level 4 or level 5 finishes.

END OF SECTION

CONFORMED

SECTION 09 30 00

TILING

PART 1 GENERAL

1.1 SUMMARY

A. Section Includes:
   1. Porcelain tile floor and wall finishes.

B. Related Sections:
   1. Division 01: Administrative, procedural, and temporary work requirements.
   2. Section 07 9200 - Joint Sealers.

C. Allowances:
   1. Include a unit cost allowance of $5.50 per square foot for tile.
   2. Installation is not included in amount of allowance, and is to be included in Contract Sum.

1.2 REFERENCES

A. American National Standards Institute (ANSI):
   1. A108/A118/A136.1 - American National Standard for Installation of Ceramic Tile.
   2. A137.1 - Specifications for Ceramic Tile.

B. ASTM International (ASTM):
   1. A82/A82M - Standard Specification for Steel Wire, Plain, for Concrete Reinforcement.
   2. A185/A185M - Standard Specification for Welded Steel Wire Reinforcement, Plain, for Concrete.
   3. C144 - Standard Specification for Aggregate for Masonry Mortar.
   4. C150 - Standard Specification for Portland Cement.
   5. C207 - Standard Specification for Hydrated Lime for Masonry Purposes.
   6. C847 - Standard Specification for Metal Lath.
   7. C1028 - Standard Test Method for Static Coefficient of Friction of Ceramic Tile and Other Like Surfaces by the Horizontal Dynamometer Pull-Meter Method.
   8. D226 - Standard Specification for Asphalt Saturated Organic Felt Used in Roofing and Waterproofing.
   9. D227 - Standard Specification for Coal-Tar Saturated Organic Felt Used in Roofing and Waterproofing.
   10. D4263 - Standard Test Method for Indicating Moisture in Concrete by the Plastic Sheet Method.
   11. D4397 - Standard Specification for Polyethylene Sheeting for Construction, Industrial and Agricultural Applications.

C. Tile Council of North America (TCNA) - Handbook for Ceramic Tile Installation.

D. Resilient Floor Covering Institute (RFCI) - FloorScore Certification Program.

1.3 SUBMITTALS

A. Submittals for Review:
   1. Product Data: Manufacturer's installation, cleaning, and maintenance instructions.
   2. Samples:
      a. Tile: Full size samples in each color.
      b. Grout: 1/2 x 1/2 x 3 inch long samples showing available colors.

1.4 QUALITY ASSURANCE

A. Installer Qualifications: Minimum 5 years' experience in work of this Section.

B. Tile and Trim Units: Meet ANSI A137.1, Standard Grade.

C. Static Coefficient of Friction for Floor Tile: Minimum 0.60, tested to ASTM C1028 in dry condition.

D. Mockup:
1. Size: 4 x 8 feet.
2. Show: Tile colors and patterns, joint profile, and control joint.
3. Locate where directed.
4. Approved mockup may remain as part of the Work.

1.5 DELIVERY, STORAGE AND HANDLING

A. Deliver mortar, adhesive, and grout containers bearing hallmark certifying compliance with reference standards.

B. Protect adhesive containers from freezing and overheating according to manufacturer's instructions.

1.6 PROJECT CONDITIONS

A. Environmental Requirements: Maintain minimum ambient temperature of 50 degrees F during and after installation.

1.7 MAINTENANCE

A. Extra Materials: One unopened carton of each tile.

PART 2 PRODUCTS

2.1 MANUFACTURERS

A. Acceptable Manufacturers - Tile:
1. Design Basis: Contract Documents are based on products by Bedrosians Tile, Inc.
2. Equivalent products by following manufacturers are acceptable:
   a. American Marazzi Tile, Inc.
   b. American Olean Tile Co., Inc.
   c. Dal-Tile Corp.
   d. Emser Tile

B. Acceptable Manufacturers - Setting and Grouting Materials:
1. BASF Corporation.
2. Bostik, Inc.
3. Laticrete International, Inc.
4. Mapei Corporation.

C. Substitutions: Not permitted.

2.2 MATERIALS

A. Floor Tile:
1. Size: 12 x 12 inches x 3/8" inch thick.
2. Edge:Square.
3. Color: To be selected from manufacturer's full color range.
4. Surface finish: Non slip
5. Trim units: Beads, coves, color to match tile.

B. Wall Tile:
   1. Size: 12 x 24 inches x 3/8” inch thick.
   2. Edge:Square.
   3. Color: To be selected from manufacturer's full color range.
   4. Surface finish: Mottle glazed.
   5. Trim units: Beads, coves, and bullnoses, color to match tile.

C. Tile: To be selected with allowance listed in Part 1.1 (C).

2.3 ACCESSORIES

A. Latex-Portland Cement Mortar: ANSI A118.4, polymer modified dry set type.

B. Dry Set Portland Cement Mortar: ANSI A118.1, polymer modified dry set type.

C. Organic Adhesive:
   1. ANSI A136.1, thin set bond.

D. Portland Cement: ASTM C150, Type 1, white color.

E. Sand: ASTM C144, clean, free of organic matter.

F. Lime: ASTM C207, Type S, hydrated.

G. Water: Clean, potable.

H. Grout:
   1. ANSI A118.6, polymer modified dry set type, unsanded.
   2. Color: To be selected from manufacturer's full color range.

I. Joint Sealers: Specified in Section 07 9200.

J. Joint Tape: Waterproof, perforated bedding tape.

PART 3 EXECUTION

3.1 PREPARATION

A. Clean surfaces to remove loose and foreign matter that could impair adhesion.

B. Remove ridges and projections. Fill voids and depressions with patching compound compatible with setting materials.

C. Allowable Substrate Tolerances:
   1. Thin set method:
      a. Maximum variation in substrate surface: 1/8 inch in 8 feet.
      b. Maximum height of abrupt irregularities: 1/32 inch.

D. Test concrete substrate to ASTM D4263; do not install tile until surfaces are sufficiently dry.

3.2 INSTALLATION

A. Install crack suppression membrane] [waterproof membrane] [sound control underlayment] in accordance with manufacturer’s instructions.

B. Methods:

1. Walls: ANSI A108.1A, thick set with Portland cement mortar bed A108.4, thin set with organic adhesive.
2. Floors: ANSI A108.5, thin set with latex-Portland cement mortar.

C. Minimize pieces less than one half size. Locate cuts to be inconspicuous.

D. Lay tile to pattern [shown on Drawings.] [furnished by Architect.] Do not interrupt tile pattern through openings.

E. Joint Width: 1/8 inch

F. Make joints watertight, without voids, cracks, excess mortar, or excess grout.

G. Fit tile around projections and at perimeter. Smooth and clean cut edges. Ensure that trim will completely cover cut edges.

H. Install Trim:
1. Inside corners: Cove units.
2. Outside corners: Bead units.
3. Base: Base units.
4. Exposed tile ends: Bullnose units.

I. Install thresholds where tile abuts dissimilar floor finish. Center on door or opening.

J. Allow tile to set for a minimum of 48 hours before grouting.

K. Grout tile joints in accordance with ANSI A108.10 without excess grout.

L. Control Joints:
1. Provide control joints at:
   a. Changes in backup material.
   b. Changes in plane.
   c. Over joints in substrate.
   d. Maximum 24 feet on center at interior locations except maximum 12 feet at surfaces exposed to direct sunlight.
   e. Maximum 16 feet on center at exterior locations.
2. Form joints per TCNA Method EJ-171.
3. Install joint backing and joint sealer as specified in Section 07 9200.

3.3 ADJUSTING

A. Remove and replace pieces that have been damaged during installation.

3.4 PROTECTION

A. Provide protection for completed work using nonstaining sheet coverings.

B. Prohibit traffic on tile floors for minimum 3 days after installation.

END OF SECTION

CONFORMED

SECTION 09 51 00

ACOUSTICAL CEILINGS

PART 1 GENERAL

1.1 SUMMARY

A. Section Includes:
   1. Suspended metal ceiling grid system.
   2. Acoustical panels.

B. Related Sections:
   1. Division 01: General Requirements

1.2 REFERENCES

A. ASTM International (ASTM):
   1. A641 - Standard Specification for Zinc-Coated (Galvanized) Carbon Steel Wire.
   2. C635 - Standard Specification for Metal Suspension Systems for Acoustical Tile and Lay-In Panel Ceilings.
   3. C636 - Standard Practice for Installation of Metal Ceiling Suspension Systems for Acoustical Tile and Lay-In Panels.
   4. E1264 - Standard Classification of Acoustical Ceiling Products.

B. Ceiling and Interior Systems Construction Association (CISCA) - Ceiling Systems Handbook.

C. Underwriters Laboratories, Inc. (UL) - Fire Resistance Directory.

1.3 SUBMITTALS

A. Submittals for Review:
   1. Samples:
      a. 12 x 12 inch acoustical panel samples.
      b. 6 inch long suspension system samples showing each profile.

B. Quality Control Submittals:
   1. Certificates of Compliance: Certification from an independent testing laboratory that acoustical panels meet fire hazard classification requirements.

1.4 QUALITY ASSURANCE

A. Installer Qualifications: Minimum 5 years experience in work of this Section.

B. Fire Hazard Classification: Class A rated, tested to ASTM E1264.

1.5 PROJECT CONDITIONS

A. Environmental Requirements: Install in approximately same conditions of temperature and humidity as will prevail after installation.

1.6 MAINTENANCE

A. Extra Materials: Two unopened carton of each acoustical panel.

PART 2 PRODUCTS

CONFORMED

2.1 MANUFACTURERS

A. Acceptable Manufacturers - Acoustical Units:
   1. Design Basis: Contract Documents are based on products by Armstrong World Industries, Inc.
   2. Equivalent products by following manufacturers are acceptable:
      a. Armstrong World Industries, Inc.
      b. Chicago Metallic Corporation.
      c. USG Corporation.

B. Acceptable Manufacturers - Suspension System:
   1. Armstrong World Industries, Inc.
   2. Certainteed Corporation
   3. USG Corporation.

C. Substitutions: Under provisions of Division 01.

2.2 MATERIALS

A. Suspension Grid System:
   1. ASTM C635, heavy duty, die cut, interlocking ends.
   2. Grid type: Exposed T.
   3. Material: Galvanized steel
   4. Runners: 1-1/2 inches high, 15/16 inch exposed width,
   5. Perimeter molding: Angle
   6. Finish: Factory applied enamel paint, sprayed and baked, white
   7. Accessories: Stabilizer bars, clips, splices,

B. Acoustical Panels:
   1. Source: Ultima Tegular by Armstrong or approved substitute.
   2. Size: 24 x 48 inches x 3/4” inch thick.
   3. Edge configuration: Beveled Tegular
   4. Performance requirements: Tested in accordance with ASTM E1264.
      a. NRC: 0.7.
      b. CAC: 35.

2.3 ACCESSORIES

A. Support Channels:
   1. Galvanized steel; size and type to suit application.

B. Hanger Wire:
   1. ASTM A641, minimum 12 gage galvanized steel.

C. Seismic Clips: Armstrong, Berc 2 Seismic Rx

D. Impact Clips: Minimum 24 gage spring steel, manufacturer's standard profile.

E. Touch-Up Paint: Color to match acoustical panels and suspension grid.

PART 3 EXECUTION

3.1 INSTALLATION

A. Install ceilings in accordance with ASTM C636 and CISCA Handbook.

B. Minimize panels less than one half size.

C. Install molding around perimeters and abutting surfaces. Miter molding at exterior corners; cut flanges and bend web to form interior corners.

D. Space hanger wires as indicated on drawings. Install additional hangers where required to support light fixtures and ceiling supported equipment.

E. Do not suspend hangers directly from wood deck. Attach steel channel horizontally to adjacent framing members; place hanger at regular spacing.

F. Hang suspension system independent of walls, columns, ducts, pipes, and conduit.

G. Where ducts or other equipment prevent regular spacing of hangers:
   1. Reinforce nearest related hangers to span extra distance, or:
   2. Suspend steel channel horizontally beneath duct or equipment; place hanger at regular spacing.

H. Install main tees at maximum 48 inches on center.

I. Install cross tees to form 24 x 48 inch modules. Lock cross tees to main tees.

J. Support ends of tees on flange of perimeter molding.

K. Place acoustical panels with edges resting flat on suspension grid.

L. Cutting Acoustic Units:
   1. Cut to fit irregular grid and perimeter edge trim and around penetrations.
   2. Locate cuts to be concealed.
   3. Cut and field paint exposed edges of reveal edge units to match factory edge.

M. Place hold down clips over cross tees at mid point of each module.

N. Place impact clips over cross tees at mid point of each module.

O. Installation Tolerances: Ceilings level to 1/8 inch in 12 feet measured in any direction.

3.2 ADJUSTING

A. Touch up minor scratches and abrasions to match factory finish.

END OF SECTION

CONFORMED

SECTION 09 65 13

RESILIENT BASE

PART 1 GENERAL

1.1 SUMMARY

A. Section Includes:
   1. Resilient wall base.

B. Related Sections:
   1. Division 01: Administrative, procedural, and temporary work requirements.

1.2 REFERENCES

A. ASTM International (ASTM) F1861 - Standard Specification for Resilient Wall Base.

B. Resilient Floor Covering Institute (RFCI) - FloorScore Certification Program.

1.3 SUBMITTALS

A. Submittals for Review:
   1. Samples: 4 inch long samples showing available colors.

1.4 MAINTENANCE

A. Extra Materials: One unopened carton of each profile and color.

PART 2 PRODUCTS

2.1 MANUFACTURERS

1. Design Basis: Contract Documents are based on products by Armstrong World Industries.

B.

C. Equivalent products by following manufacturers are acceptable:
   1. Allstate Rubber Corp.
   2. Burke Flooring.
   3. Johnsonite, Inc.
   4. Roppe Corp.

D. Substitutions: Not Permitteed

2.2 MATERIALS

A. Resilient Base:
   1. Type: ASTM F1861, thermoplastic rubber.
   2. Thickness: 0.125 inch.
   3. Profile: Straight.
   4. Height: 4 inches.
   5. Length: Continuous rolls.
   6. Color and Finish: To be selected from manufacturer's full color range.
   7. End units and outside corners: Preformed; profile, size, and color to match base.

2.3 ACCESSORIES

CONFORMED

A. Adhesive:
   1. Water based, waterproof, recommended by base manufacturer.

PART 3 EXECUTION

3.1 PREPARATION

A. Prepare surfaces to receive base:
   1. Remove materials that could interfere with adhesion.
   2. Fill low spots with patching compound; finish flush with adjacent surface.
   3. Remove high spots, ridges and nibs.

3.2 INSTALLATION

A. Apply adhesive continuously to back of base.

B. Maintain top edge true to line and bottom edge in continuous contact with floor. Butt joints tight; butt base tight to adjacent construction.

C. Do not install pieces less than 6 inches long.

D. Miter and butt inside corners.

E. At outside corners install preformed corner pieces.

F. At exposed ends, install premolded units.

G. Scribe to door frames and other interruptions.

END OF SECTION

CONFORMED

SECTION 09 65 16

RESILIENT SHEET FLOORING

PART 1 - GENERAL

1.01 SUMMARY

A. Section Includes:
1. Resilient vinyl sheet flooring

B. Related Documents
1. Drawings and General Provisions of the Contract (including General and Supplementary Conditions and Division 1 sections) apply to the work of this section.

C. Related Sections
1. Other Division 9 sections for floor finishes related to this section but not the work of this section
2. Division 3 Concrete; not the work of this section
3. Division 6 Wood and Plastics; not the work of this section
4. Division 7 Thermal and Moisture Protection; not the work of this section

1.02 REFERENCES

A. Armstrong Technical Manuals
1. Armstrong Guaranteed Installation Systems manual, F-5061

B. ASTM International:
1. ASTM E 648 Standard Test Method for Critical Radiant Flux of Floor-Covering Systems Using a Radiant Heat Energy Source
2. ASTM E 662 Standard Test Method for Specific Optical Density of Smoke Generated by Solid Materials
3. ASTM F 710 Standard Practice for Preparing Concrete Floors to Receive Resilient Flooring
4. ASTM F 1303 Standard Specification for Sheet Vinyl Floor Covering with Backing
6. ASTM F 1861 Standard Specification for Resilient Wall Base
7. ASTM F 1869 Standard Test Method for Measuring Vapor Emission Rate of Concrete Subfloor Using Anhydrous Calcium Chloride
8. ASTM F 1913 Standard Specification for Vinyl Sheet Floor Covering Without Backing
9. ASTM F 2170 Standard Test Method for Determining Relative Humidity in Concrete Floor Slabs Using in situ Probes

C. National Fire Protection Association (NFPA):
1. NFPA 253 Standard Method of Test for Critical Radiant Flux of Floor Covering Systems Using a Radiant Heat Energy Source
2. NFPA 258 Standard Test Method for Measuring the Smoke Generated by Solid Materials

1.03 SYSTEM DESCRIPTION

A. Performance Requirements:
Provide flooring which has been manufactured, fabricated and installed to performance criteria certified by manufacturer without defects, damage, or failure.

B. Administrative Requirements
1. Pre-installation Meeting: Conduct an on-site pre-installation meeting to verify project requirements, substrate conditions, manufacturer's installation instructions and manufacturer's warranty requirements. Comply with Division 1 Project Management and Coordination (Project Meetings) Section.
2. Pre-installation Testing: Conduct pre-installation testing as follows: [Specify testing (i.e. moisture tests, bond test, pH test, etc)

D. Sequencing and Scheduling

1. Install flooring and accessories after the other finishing operations, including painting, have been completed. Close spaces to traffic during the installation of the flooring.
2. Do not install flooring over concrete slabs until they are sufficiently dry to achieve a bond with the adhesive, in accordance with the manufacturer's recommended bond, moisture tests and pH test.

1.04 SUBMITTALS

A. Tech Data

Submit shop drawings, seaming plan, coving details, and manufacturer's technical data, installation and maintenance instructions (latest edition of Armstrong Guaranteed Installation Systems manual, F-5061.) for flooring and accessories.

B. Samples

Submit the manufacturer's standard samples showing the required colors for flooring, welding rods, and applicable accessories.

C. MSDS

Submit Material Safety Data Sheets (MSDS) available for flooring products, adhesives, weld rod, patching/leveling compounds, floor finishes (polishes) and cleaning agents.

D. Certifications-1

If required, submit the manufacturer's certification that the flooring has been tested by an independent laboratory and complies with the required fire tests.

E. Closeout

Closeout Submittals: Submit the following:

1. Operation and Maintenance Data: Operation and maintenance data for installed products in accordance with Division 1 Closeout Submittals (Maintenance Data and Operation Data) Section. Include methods for maintaining installed products, and precautions against cleaning materials and methods detrimental to finishes and performance.
2. Warranty: Warranty documents specified herein

1.05 QUALITY ASSURANCE

A. Responsibility

Single-Source Responsibility: provide types of flooring and accessories supplied by one manufacturer, including leveling and patching compounds, and adhesives.

B. Select Installer

A. Installer Qualifications: Minimum 5 years experience in work of this Section.

C. Fire Performance

Fire Performance Characteristics: Provide resilient vinyl sheet flooring with the following fire performance characteristics as determined by testing material in accordance with ASTM test methods indicated below by a certified testing laboratory or other testing agency acceptable to authorities having jurisdiction:

1. ASTM E 648 Critical Radiant Flux of 0.45 watts per sq. cm. or greater, Class I
2. ASTM E 662 (Smoke Generation) Maximum Specific Optical Density of 450 or less

1.06 DELIVERY, STORAGE, AND HANDLING

A. Comply-D1

Comply with Division 1 Product Requirements Sections

B. Comply-Manufacturer

Comply with manufacturer's ordering instructions and lead time requirements to avoid construction delays.

C. Deliverability

Deliver materials in good condition to the jobsite in the manufacturer's original unopened containers that bear the name and brand of the manufacturer, project identification, and shipping and handling instructions.

D. Storage

Store materials in a clean, dry, enclosed space off the ground, protected from harmful weather conditions and at temperature and humidity conditions recommended by the manufacturer. Protect adhesives from freezing. Store flooring, adhesives and accessories in the spaces where they will be installed for at least 48 hours before beginning installation.

1.07 PROJECT CONDITIONS

A. Temperature

Maintain a minimum temperature in the spaces to receive the flooring and accessories of 65°F (18°C) and a maximum temperature of [100°F (38°C)][85°F (29°C)] for at least 48 hours before, during, and for not less than 48 hours after installation. Thereafter, maintain a minimum temperature of 55°F (13°C) in areas where work is completed. Protect all materials from the direct flow of heat from hot-air registers, radiators, or other heating fixtures and appliances. Refer to the Armstrong Guaranteed Installations Systems manual, F-5061 for a complete guide on project conditions.

1.08 WARRANTY

A. Resilient

Resilient Flooring: Submit a written warranty executed by the manufacturer, agreeing to repair or replace resilient flooring that fails within the warranty period.

B. Warranty Period

Warranty Period: 5 years

C. Rights

The Warranty shall not deprive the Owner of other rights the Owner may have under other provisions of the Contract Documents and will be in addition to and run concurrent with other warranties made by the Contractor under the requirements of the Contract Documents.

D. Validation

For the Warranty to be valid, this product is required to be installed using the appropriate Armstrong Guaranteed Installation System. Product installed not using the specific instructions from the Guaranteed Installation System will void the warranty.

1.09 MAINTENANCE

A. Extra Materials

Furnish minimum 5% extra materials from same production run as products installed. Package extra materials with protective covering for storage and identified with appropriate labels.

PART 2- PRODUCTS

2.01 MANUFACTURER

A. Acceptable Manufacturers

1. Basis of Design Manufacturer:
Armstrong World Industries, Inc., 2500 Columbia Avenue, Lancaster, PA 17603,
http://www.armstrong.com/commflooringna/
2. Equivalent products by following manufacturers are acceptable:
    a. Forbo Flooring.
    b. Mannington Resilient Floors.
    c. Tarkett, Inc.
3. Substitutions: Under not allowed

2.02 RESILIENT SHEET FLOORING MATERIALS

A. Products

Provide Homogeneous Sheet Vinyl Flooring:

1. Description: An unbacked, nonlayered, homogeneous sheet vinyl flooring. Protected by a UV-cured polyurethane finish, the colors and pattern detail are dispersed uniformly throughout the thickness of the product. Color pigments are insoluble in water and resistant to cleaning agents and light.

2. Homogeneous sheet flooring shall conform to the requirements of ASTM F1913 Standard Specification for Vinyl Sheet Floor Covering Without Backing

Medley - Nothing but Beige - 82.5 x 6 x 0.080

B. Vinyl Weld Rod

Vinyl Weld Rod:

1. [Provide solid color or patterned vinyl weld rod as produced by Armstrong World Industries, Inc., and intended for heat welding of seams. Color shall be compatible with field color of flooring or as selected by Architect to contrast with field color of flooring. Color selected from manufactuers standard range

C. Seam Adhesive

Seam Adhesive:

1. Provide Armstrong S-761 Seam Adhesive at seams as recommended by the resilient flooring manufacturer.

2.03 PRODUCT SUBSTITUTION

A. Substitutions

Substitutions: No substitutions permitted because of the specific attributes listed in Section 2.02.

2.04 WALL BASE MATERIALS

A. WBA Flash Cove

For integral flash cove base: Provide integral flash cove wall base by extending sheet 6 in. up the wall using adhesive, welding rod, and accessories recommended and approved by the flooring manufacturer.

2.05 ADHESIVES

A. Standard Adhesive

Provide Armstrong [S-599 Premium Commercial Vinyl Sheet Flooring Adhesive] [S-240 High-Performance Epoxy Flooring Adhesive] for field areas and Armstrong [S-580 Flash Cove Adhesive at flash coving][S-725 Wall Base Adhesive at the wall base] as recommended by the flooring manufacturer.

B. Abode

[For Abode: Provide Armstrong [S-288 Flooring Adhesive] [S-289 Releasable Adhesive] for field areas and Armstrong [S-725 Wall Base Adhesive at the wall base] as recommended by the flooring manufacturer].

C. High Moisture Adhesive

[For High-Moisture Installation Warranty, Full Spread: Provide Armstrong S-543 Premium Plus Commercial Sheet Flooring Adhesive for field areas and Armstrong [S-580 Flash Cove Adhesive at flash coving][S-725 Wall Base Adhesive at the wall base] as recommended by the flooring manufacturer].

D. Spray Adhesive Installation Warranty

[For Spray Adhesive High-Moisture Installation Warranty (Abode excluded), Full Spread: Provide Armstrong Flip™ Spray Adhesive for field areas and Armstrong [S-580 Flash Cove Adhesive at flash coving][S-725 Wall Base Adhesive at the wall base] as recommended by the flooring manufacturer].

E. Non Heat Weld

[For non heat welding, provide Armstrong S-761 Seam Adhesive at seams as recommended by the resilient flooring manufacturer].

2.06 ACCESSORIES

A. Patching

For patching, smoothing, and leveling monolithic subfloors (concrete, terrazzo, quarry tile, ceramic tile, and certain metals), provide Armstrong [S-184 Fast-Setting Cement-Based Patch and Underlayment] [S-194 Cement-Based Patch, Underlayment and Embossing Leveler / S-195 Underlayment Additive].

B. Sealing

For sealing joints between the top of wall base or integral cove cap and irregular wall surfaces such as masonry, provide plastic filler applied according to the manufacturer's recommendations.

C. Top Edge Trim

Provide top edge trim caps of anodized aluminum for integral flash cove as approved by the Architect.]

D. Fillet Support

Provide a fillet support strip for integral cove base with a minimum radius of 1 in. (2.54 cm) of wood or plastic.

E. Transition

Provide transition/reducing strips tapered to meet abutting materials.

F. Threshold

Provide threshold of thickness and width as shown on the drawings.

G. Resilient Edge Strips

Provide resilient edge strips of width shown on the drawings, of equal gauge to the flooring, homogeneous vinyl or rubber composition, tapered or bullnose edge, with color to match or contrast with the flooring, or as selected by the Architect from standard colors available.

H. Metal Edge Strips

Provide metal edge strips of width shown on the drawings and of required thickness to protect exposed edges of the flooring. Provide units of maximum available length to minimize the number of joints. Use butt-type metal edge strips for concealed anchorage, or overlap-type metal edge strips for exposed anchorage. Unless otherwise shown, provide strips made of extruded aluminum with a mill finish.

PART 3 - EXECUTION

3.01 Manufacturer's Instructions

A. Compliance

Compliance: Comply with manufacturer's product data, including technical bulletins, product catalog, installation instructions, and product carton instructions for installation and maintenance procedures as needed.

3.02 EXAMINATION

A. Site Verification

Site Verification of Conditions: Verify substrate conditions (which have been previously installed under other sections) are acceptable for product installation in accordance with manufacturer's instructions (i.e. moisture tests, bond test, pH test, etc.).

B. Visual Inspection

Visually inspect flooring materials, adhesives and accessories prior to installation. Flooring material with visual defects shall not be installed and shall not be considered as a legitimate claim.

C. Examine Subfloors

Examine subfloors prior to installation to determine that surfaces are smooth and free from cracks, holes, ridges, and other defects that might prevent adhesive bond or impair durability or appearance of the flooring material.

D. Inspect Subfloors

Inspect subfloors prior to installation to determine that surfaces are free from curing, sealing, parting and hardening compounds; residual adhesives; adhesive removers; and other foreign materials that might prevent adhesive bond. Visually inspect for evidence of moisture, alkaline salts, carbonation, dusting, mold, or mildew.

E. Reporting

Report conditions contrary to contract requirements that would prevent a proper installation. Do not proceed with the installation until unsatisfactory conditions have been corrected.

F. Failure Warning

Failure to call attention to defects or imperfections will be construed as acceptance and approval of the subfloor. Installation indicates acceptance of substrates with regard to conditions existing at the time of installation.

3.03 PREPARATION

A. Smooth Surfaces

Subfloor Preparation: Smooth concrete surfaces, removing rough areas, projections, ridges, and bumps, and filling low spots, control or construction joints, and other defects with Armstrong [S-184 Fast-Setting Cement-Based Patch and Underlayment][S-194 Cement-Based Patch, Underlayment and Embossing Leveler / S-195 Underlayment Additive] as recommended by the flooring manufacturer. Refer to Armstrong Guaranteed Installation Systems manual, F-5061 and ASTM F 710 Standard Practice for Preparing Concrete Floors to Receive Resilient Flooring for additional information on subfloor preparation.

B. Subfloor Cleaning

Subfloor Cleaning: Remove paint, varnish, oils, release agents, sealers, and waxes. Remove residual adhesives as recommended by the flooring manufacturer. Remove curing and hardening compounds not compatible with the adhesives used, as indicated by a bond test or by the compound manufacturer's recommendations for flooring. Avoid organic solvents. Refer to the Armstrong Guaranteed Installation Systems manual, F-5061 and ASTM F 710 Standard Practice for Preparing Concrete Floors to Receive Resilient Flooring for additional information on subfloor preparation.

C. Standard Moisture Test

Moisture Testing: [Perform subfloor moisture testing in accordance with [ASTM F 2170, Standard Test Method for Determining Relative Humidity in Concrete Slabs Using in-situ Probes][ASTM F 1869,Standard Test Method for Measuring Moisture Vapor Emission Rate of Concrete Subfloor Using Anhydrous Calcium Chloride] and Bond Tests as described in publication Armstrong Guaranteed Installation Systems manual, F-5061 to determine if surfaces are dry; free of curing and hardening compounds, old adhesive, and other coatings; and ready to receive flooring. [Relative humidity shall not exceed 80%.][MVER shall not exceed 5 lbs./1000 sq. ft./24 hrs.] On installations where both the Percent Relative Humidity and the Moisture Vapor Emission Rate tests are conducted, results for both tests shall comply with the allowable limits listed above. Do not proceed with flooring installation until results of moisture tests are acceptable. All test results shall be documented and retained]

D. High Moisture Test

Moisture Testing: [For High-Moisture Installation Warranty (using Armstrong S-543 Premium Plus Commercial Sheet Flooring Adhesive), perform subfloor moisture testing in accordance with ASTM F 2170, Standard Test Method for Determining Relative Humidity in Concrete Slabs Using in-situ Probes and Bond Tests as described in publication Armstrong Guaranteed Installation Systems manual, F-5061 to determine if surfaces are dry; free of curing and hardening compounds, old adhesive, and other coatings; and ready to receive flooring. Relative humidity of the slab shall not exceed 90%. Do not proceed with flooring installation until results of moisture tests are acceptable. All test results shall be documented and retained].

E. High-Moisture Installation Warranty

Moisture Testing: [For Spray Adhesive High-Moisture Installation Warranty, using Armstrong Flip™ Spray Adhesive, perform subfloor moisture testing in accordance with ASTM F 2170, 'Standard Test Method for Determining Relative Humidity in Concrete Slabs Using in-situ Probes' and Bond Tests as described in publication F-5061, “Armstrong Guaranteed Installation System,” manual to determine if surfaces are dry; free of curing and hardening compounds, old adhesive, and other coatings; and ready to receive flooring. Internal relative humidity of the concrete shall not exceed 90%. Do not proceed with flooring installation until results of moisture tests are acceptable. All test results shall be documented and retained].

F. pH Test

Concrete pH Testing: Perform pH tests on concrete floors regardless of their age or grade level. All test results shall be documented and retained.

G. Wood Subfloor

Wood subfloors: Armstrong resilient floors are recommended on suspended wood subfloors with a 1/4" underlayment (see product installation systems for exceptions) and a minimum of 18" of well-ventilated air space below. Armstrong does not recommend installing resilient flooring on wood subfloors applied directly over concrete or on sleeper-construction subfloors. Loading requirements for subfloors are normally set by various building codes on both local and national levels. Trade associations such as APA-The Engineered Wood Association provide structural guidelines for meeting various code requirements. Subfloor panels are commonly marked with span ratings showing the maximum center-to-center spacing in inches of supports over which the panels should be placed.

1. Refer to the Armstrong Guaranteed Installation Systems manual, F-5061 and ASTM F 1482, Standard Guide to Wood Underlayment Products Available for Use Under Resilient Flooring for additional information.

H. Surface Cleaning

Surface Cleaning: Vacuum or broom-clean surfaces to be covered immediately before the application of flooring. Make subfloor free from dust, dirt, grease, and all foreign materials.

3.04 INSTALLATION OF FLOORING

A. F5061

Install flooring in strict accordance with the latest edition of Armstrong Guaranteed Installation Systems manual, F-5061. Failure to comply may result in voiding the manufacturer's warranty listed in Section 1.08

B. Wall to Wall

Install flooring wall to wall before the installation of floor-set cabinets, casework, furniture, equipment, movable partitions, etc. Extend flooring into toe spaces, door recesses, closets, and similar openings as shown on the drawings.

C. Pan-type

If required, install flooring on pan-type floor access covers. Maintain continuity of color and pattern within pieces of flooring installed on these covers. Adhere flooring to the subfloor around covers and to covers.

D. Scribe

Scribe, cut, and fit or flash cove to permanent fixtures, columns, walls, partitions, pipes, outlets, and built-in furniture and cabinets.

E. Adherence

Adhere flooring to the subfloor without cracks, voids, raising and puckering at the seams. Roll with a 100-pound (45.36 kilogram) roller in the field areas. Hand-roll flooring at the perimeter and the seams to assure adhesion. Refer to specific rolling instructions of the flooring manufacturer.

F. Minimal Seams

Lay flooring to provide a minimum number of seams. Avoid cross seams, filler pieces, and strips. Match edges for color shading and pattern at the seams in compliance with the manufacturer's recommendations.

G. Tools

Install flooring with adhesives, tools, and procedures in strict accordance with the manufacturer's written instructions. Observe the recommended adhesive trowel notching, open times, and working times.

H. Heat Welded Seams

[Prepare heat-welded seams with special routing tool supplied for this purpose and heat weld with vinyl welding rod in seams.] [Prepare sealed seams with special seam adhesive supplied for this purpose.] Use methods and sequence of work in conformance with written instructions of the flooring manufacturer. Finish all seams flush and free from voids, recesses, and raised areas.

I. Integral Flash Cove

Provide integral flash cove wall base where shown on the drawings, including cove fillet support strip and top edge cap trim. Construct flash cove base in accordance with the flooring manufacturer's instructions. Heat-weld seams as specified for those on the floor.

3.05 INSTALLATION OF ACCESSORIES

A. Top Set

Apply top set wall base to walls, columns, casework, and other permanent fixtures in areas where top-set base is required. Install base in lengths as long as practical, with inside corners fabricated from base materials that are mitered or coped. Tightly bond base to vertical substrate with continuous contact at horizontal and vertical surfaces.

B. Voids

Fill voids with plastic filler along the top edge of the resilient wall base or integral cove cap on masonry surfaces or other similar irregular substrates.

C. Resilient Edge Strips - Butted

Place resilient edge strips tightly butted to flooring, and secure with adhesive recommended by the edge strip manufacturer. Install edge strips at edges of flooring that would otherwise be exposed.

D. Metal Edge Strips

Apply [butt-type] [overlap] metal edge strips where shown on the drawings, [before] [after] flooring installation. Secure units to the substrate, complying with the edge strip manufacturer's recommendations.

3.06 CLEANING

A. Initial Maintenance

Perform initial and on-going maintenance according to the latest edition of Armstrong Guaranteed Installation Systems manual, F-5061.

3.07 PROTECTION

A. Protection

Protect installed flooring as recommended by the flooring manufacturer against damage from rolling loads, other trades, or the placement of fixtures and furnishings. (See Finishing The Job in the latest edition of Armstrong Guaranteed Installation Systems manual, F-5061.)

B. Install in longest practical lengths; butt ends tight.

C. Scribe to abutting surfaces.

D. Do not allow traffic on flooring until adhesives have set. Cover areas subject to traffic with protective covering.

END OF SECTION

CONFORMED

SECTION 09 77 20

DECORATIVE FIBERGLASS REINFORCED WALL PANELS

PART 1 - GENERAL

1.1 SUMMARY

A. Section Includes: Prefinished polyester glass reinforced plastic sheets and adhered to gypsum wall board.
   1. PVC trim.

B. Products Not Furnished or Installed under This Section:
   1. Gypsum substrate board.
   2. Resilient Base.

1.2 RELATED SECTIONS

A. Section 09-29-00 – Gypsum substrate board.

B. Section 06-10-00 – Rough Carpentry

C. Section 05-40-00 – Metal Stud Framing

D. Section 09-91-00 - Painting

E. Section 09-65-13 - Resilient Base.

1.3 REFERENCES

A. American Society for Testing and Materials: Standard Specifications (ASTM)
   1. ASTM D 256 - Izod Impact Strengths (ft #/in)
   2. ASTM D 570 - Water Absorption (%)
   3. ASTM D 638 - Tensile Strengths (psi) & Tensile Modulus (psi)
   4. ASTM D 790 - Flexural Strengths (psi) & Flexural Modulus (psi)
   5. ASTM D 2583- Barcol Hardness
   6. ASTM D 5319 - Standard Specification for Glass-Fiber Reinforced Polyester Wall and Ceiling Panels.
   7. ASTM E 84 - Standard Test Method for Surface Burning Characteristics of Building Materials.

1.4 SUBMITTALS

A. Product Data: Submit sufficient manufacturer's data to indicate compliance with these specifications, including:
   1. Preparation instructions and recommendations.
   2. Storage and handling requirements and recommendations.
   3. Installation methods.

B. Shop Drawings: Submit elevations of each wall showing location of paneling and trim members with respect to all discontinuities in the wall elevation.

C. Selection Samples: Submit manufacturer's standard color pattern selection samples representing manufacturer's full range of available colors and patterns.

D. Samples for Verification: Submit appropriate section of panel for each finish selected indicating the color, texture, and pattern required.
1. Submit complete with specified applied finish.
2. For selected patterns show complete pattern repeat.
3. Exposed Molding and Trim: Provide samples of each type, finish, and color.

E. Manufacturers Material Safety Data Sheets (MSDS) for adhesives, sealants and other pertinent materials prior to their delivery to the site.

1.5 QUALITY ASSURANCE

A. Conform to building code requirements for interior finish for smoke and flame spread requirements as tested in accordance with:
1. ASTM E 84 (Method of test for surface burning characteristics of building Materials)
a. Wall Required Rating – Class A.

1.6 DELIVERY, STORAGE AND HANDLING

A. Deliver materials factory packaged on strong pallets.

B. Store panels and trim lying flat, under cover and protected from the elements. Allow panels to acclimate to room temperature (70°) for 48 hours prior to installation.

1.7 PROJECT CONDITIONS

A. Environmental Limitations: Building are to be fully enclosed prior to installation with sufficient heat (70°) and ventilation consistent with good working conditions for finish work

B. During installation and for not less than 48 hours before, maintain an ambient temperature and relative humidity within limits required by type of adhesive used and recommendation of adhesive manufacturer.
1. Provide ventilation to disperse fumes during application of adhesive as recommended by the adhesive manufacturer.

1.8 WARRANTY

A. Furnish one year guarantee against defects in material and workmanship.

PART 2 - PRODUCTS

2.1 ACCEPTABLE MANUFACTURER

A. Design Basis
1. Marlite; Standard FRP. 202 Harger Street, Dover, OH 44622. 800-377-1221 FAX (330) 343-4668 Email: info@marlite.com www.marlite.com.

B. Substitutions – under provisions of Division 01

PANELS

C. Fiberglass reinforced thermosetting polyester resin panel sheets complying with ASTM D 5319.
   1. Coating: Multi-layer print, primer and finish coats or applied over-layer.
   2. Dimensions:
      a. Thickness – 0.090 “ (2.29mm) nominal
      b. Width - 4'-0” (1.22m) nominal
      c. Length – [10’-0” (3.0m)][8’-0” (2.4m)][As indicated on the drawings] nominal
   3. Tolerance:
      a. Length and Width: +/-1/8 “ (3.175mm)
      b. Square - Not to exceed 1/8 “ for 8 foot (2.4m) panels or 5/32 “ (3.96mm) for 10 foot (2.4m) panels

D. Properties: Resistant to rot, corrosion, staining, denting, peeling, and splintering.
   1. Flexural Strength - 1.0 x 10^4 psi per ASTM D 790. (7.0 kilogram-force/square millimeter)
   2. Flexural Modulus - 3.1 x 10^5 psi per ASTM D 790. (217.9 kilogram-force/square millimeter)
   3. Tensile Strength - 7.0 x 10^3 psi per ASTM D 638. (4.9 kilogram-force/square millimeter)
   4. Tensile Modulus - 1.6 x 10^5 psi per ASTM D 638. (112.5 kilogram-force/square millimeter)
   5. Water Absorption - 0.72% per ASTM D 570.
   6. Barcol Hardness (scratch resistance) of 35 55 as per ASTM D 2583.
   7. Izod Impact Strength of 72 ft. lbs./in ASTM D 256

E. Back Surface: Smooth. Imperfections which do not affect functional properties are not cause for rejection.

F. Front Finish: In accordance with preapproved sample.
   a. Color: To Be selected from manufacturer’s standard range.
   b. Surface: Marlite Standard FRP Pebbled
   c. Fire Rating Class A (I)
   d. Size: 48” wide panels – Panels to be set horizontally and use maximum lengths available to minimize vertical joints

2.2 MOLDINGS

A. PVC Trim: Thin-wall semi-rigid extruded PVC.
   1. M 350 Inside Corner, [8’ length
   2. M 360 Outside Corner, 8’ length
   3. M 365 Division, 8’ length
   4. M 370 Edge, 8’ length
   5. Color: To match panel color

2.3 ACCESSORIES

A. Fasteners: Non-staining nylon drive rivets.
   1. Match panel colors.
   2. Length to suit project conditions.

B. Adhesive: Either of the following construction adhesives complying with ASTM C 557.
   1. Marlite C-551 FRP Adhesive - Water- resistant, non-flammable adhesive.
   2. Marlite C-375 Construction Adhesive - Flexible, water-resistant, solvent based adhesive, formulated for fast, easy application.
   3. Titebond Advanced Polymer Panel Adhesive – VOC compliant, non-flammable, environmentally safe adhesive.

C. Sealant:
   1. Marlite Brand MS-250 Clear Silicone Sealant..
   2. Marlite Brand - Color Match Sealant.

PART 3 - EXECUTION

3.1 PREPARATION

A. Examine backup surfaces to determine that corners are plumb and straight, surfaces are smooth, uniform, clean and free from foreign matter, nails countersunk, joints and cracks filled flush and smooth with the adjoining surface.
   1. Verify that stud spacing does not exceed 24” (61cm) on-center.

B. Repair defects prior to installation.
   1. Level wall surfaces to panel manufacturer’s requirements. Remove protrusions and fill indentations.

3.2 INSTALLATION

A. Comply with manufacturer's recommended procedures and installation sequence.

B. Cut sheets to meet supports allowing 1/8” (3 mm) clearance for every 8 foot (2.4m) of panel.
   1. Cut and drill with carbide tipped saw blades or drill bits, or cut with shears.
   2. Pre-drill fastener holes 1/8” (3mm) oversize with high speed drill bit.
      a. Space at 8” (200mm) maximum on center at perimeter, approximately 1” from panel edge.
      b. Space at in field in rows 16’ (40.64cm) on center, with fasteners spaced at 12” (30.48 cm) maximum on center.

C. Apply panels to board substrate, above base, vertically oriented with seams plumb and pattern aligned with adjoining panels.
   1. Install panels with manufacturer's recommended gap for panel field and corner joints.
      a. Adhesive trowel and application method to conform to adhesive manufacturer’s recommendations.
      b. Drive fasteners for snug fit. Do not over-tighten.

D. Apply panel moldings to all panel edges using silicone sealant providing for required clearances.
   1. All moldings must provide for a minimum 1/8 “ (3mm) of panel expansion at joints and edges, to insure proper installation.
   2. Apply sealant to all moldings, channels and joints between the system and different materials to assure watertight installation.

3.3 CLEANING

A. Remove excess sealant from panels and moldings. Wipe panel down using a damp cloth and mild soap solution or cleaner.

B. Refer to manufacturer's specific cleaning recommendations Do not use abrasive cleaners.

END OF SECTION

CONFORMED

SECTION 09 91 00

PAINTING

PART 1 GENERAL

1.1 SECTION INCLUDES

A. Surface preparation and field painting of exposed interior items and surfaces, including mechanical and electrical equipment that do not have a factory-applied finish.

B. Surface preparation and field painting of exposed exterior items and surfaces.

1.2 RELATED SECTIONS

A. Section 03300 - Concrete: Surface coordination and curing provisions.

B. Section 05120 - Structural Steel: Shop priming structural steel.

C. Section 05500 - Metal Fabrications: Shop priming ferrous metal.

D. Section 06200 - Finish Carpentry: Shop priming architectural woodwork.

E. Section 08110 - Steel Doors and Frames: Factory priming steel doors and frames.

F. Section 09260 - Gypsum Board Assemblies: Surface preparation of gypsum board.

G. Section 15050 - Basic Mechanical Materials and Methods: Mechanical identification.

H. Section 16050 - Basic Electrical Materials and Methods: Electrical identification.

1.3 REFERENCES

A. American Society for Testing and Materials (ASTM) D 16 - Standard Terminology for Paint, Related Coatings, Materials, and Applications.

B. Steel Structures Painting Council (SSPC) SP6 - Commercial Blast Cleaning Procedures.

C. Steel Structures Painting Council (SSPC) SP10 - Near White Blast Cleaning Procedure.

1.4 DEFINITIONS

A. General: Standard coating terms defined within Masters Painters Institute (MPI) manual.
   1. Gloss level 1 - Flat with a gloss range below 5 when measured at a 60-degree meter and 10 when measured at an 85-degree meter.
   2. Gloss level 2 - Low Sheen with a gloss range of 5 to 10 when measured at a 60 degree meter and 10 to 35 when measured at an 85 degree meter.
   3. Gloss level 3 - Eggshell with a gloss range between 10 and 15 when measured at a 60-degree meter and 10 to 35 when measured at an 85-degree meter.
   4. Gloss level 4 - Satin with a gloss range between 25 to 35 when measured with a 60 degree meter.
   5. Gloss level 5 - Semi-Gloss with a gloss range between 50 and 55 when measured at a 60 degree meter.
   6. Gloss level 6 - Gloss with a gloss range more than 70 when measured at a 60 degree meter.

1.5 SUBMITTALS

A. Submit under provisions of Section 01300.

B. [Product Data]: Manufacturer's data sheets on each product to be used, including:
   1. Material List: An inclusive list of required coating materials. Indicate each material and cross-reference specific coating, finish system, and application. Identify each material by manufacturer's catalog number and general classification.
   2. Preparation instructions and recommendations.
   3. Manufacturer's Information: Manufacturer's technical information, including label analysis and instructions for handling, storing, and applying each coating material.

C. Selection Samples: For each finish product specified, two complete sets of color chips representing manufacturer's full range of available colors and patterns.

D. Verification Samples: For each finish product specified, two samples, minimum size 6 inches (150 mm) square, representing actual product, color, and patterns.

1.6 QUALITY ASSURANCE

A. Installer Qualifications: A firm or individual experienced in applying paints and coatings similar in material, design, and extent to those indicated for this Project, whose work has resulted in applications with a record of successful in-service performance.

B. Obtain block fillers and primers for each coating system from the same manufacturer as the finish coats.

C. Paint exposed surfaces. If an item or a surface is not specifically mentioned, paint the item or surface the same as similar adjacent materials or surfaces. If a color of finish is not indicated, Architect will select from standard colors and finishes available.

D. Do not paint prefinished items, concealed surfaces, finished metal surfaces, operating parts, and labels.

E. Mock-Up: Provide a mock-up for evaluation of surface preparation techniques and application workmanship.
   1. Finish areas designated by Architect.
   2. Do not proceed with remaining work until workmanship, color, and sheen are approved by Architect.
   3. Refinish mock-up area as required to produce acceptable work.

1.7 DELIVERY, STORAGE, AND HANDLING

A. Deliver materials to Project site in manufacturer's original, unopened packages and containers bearing manufacturer's name and label:

B. Store materials not in use in tightly covered containers in a well-ventilated area at a minimum ambient temperature of 45 deg F (7 deg C). Maintain storage containers in a clean condition, free of foreign materials and residue.

C. Maintain environmental conditions (temperature, humidity, and ventilation) within limits recommended by manufacturer for optimum results. Do not install products under environmental conditions outside manufacturer's absolute limits.

D. Apply waterborne paints only when temperatures of surfaces to be painted and surrounding air are between 50 and 90 deg F (10 and 32 deg C), unless manufacturers instructions specifically state's.

E. Apply solvent-thinned paints only when temperatures of surfaces to be painted and surrounding air are between 45 and 95 deg F (7 and 35 deg C).

F. Do not apply paint in snow, rain, fog, or mist; or when relative humidity exceeds 85 percent; or at temperatures less than 5 deg F (3 deg C) above the dew point; or to damp or wet surfaces.
   1. Painting may continue during inclement weather if surfaces and areas to be painted are enclosed and heated within temperature limits specified by manufacturer during application and drying periods.

1.8 EXTRA MATERIALS

A. Furnish extra paint materials from the same production run as the materials applied and in the quantities described below. Package with protective covering for storage and identify with labels describing contents. Deliver extra materials to Owner.

B. Quantity: Furnish Owner with an additional three percent, but not less than 1 gal (3.8 l) or 1 case, as appropriate, of each material and color applied.

PART 2 PRODUCTS

2.1 MANUFACTURERS

A. Acceptable Manufacturer:
   1. Kelly-Moore Paints (basis of specification)
   2. Dunn Edwards Paints
   3. Benjamin Moore Paints

B. Requests for substitutions will be considered in accordance with provisions of Section 01600.

2.2 PAINT MATERIALS - GENERAL

A. Material Compatibility: Provide block fillers, primers, and finish-coat materials that are compatible with one another and with the substrates indicated under conditions of service and application, as demonstrated by manufacturer based on testing and field experience.

B. VOC Classification: Provide materials, including primers, undercoats, and finish-coat materials, that meet local air quality management district regulations.

C. Color: Refer to Finish Schedule and Paint Legend for paint colors.

D. Application Rate: Coating thickness for primer, intermediate, barrier and finish coats shall be measured as Dry Film Thickness (DFT) and comply with manufacturer's published recommendations.

2.3 EXTERIOR METAL

A. Ferrous Metal:
   1. Primer:
      a. 1 coat - 1405 Devprime Alkyd Rust-Preventive Primer < 250 gpl.
   2. Finish:
      a. 2 coats - 1448 Devcryl Acrylic Semi-Gloss Enamel.

B. Galvanized Metal, Aluminum and Copper:
   1. Primer:
      a. 1 coat - 1440 Devcryl Acrylic Primer/Finish.
   2. Finish:
      a. 2 coats - 1245 ACRY-SHIELD 100 percent Acrylic Exterior Low Sheen Finish.

2.4 EXTERIOR MASONRY, CONCRETE AND STUCCO

A. Concrete, Stucco, and Brick (Painted Finish):
1. Primer:
a. 1 coat - 247 ACRY-SHIELD 100 percent Acrylic Exterior Masonry Primer.
2. Finish:
a. 2 coats - 1245 ACRY-SHIELD 100 percent Acrylic Exterior Low Sheen Finish.

B. Colors:
a. Body Color 1: KM 4586 – Abbey Road
b. Body Color 2: KM 4587 – Smoky Topaz

2.5 INTERIOR GYPSUM WALLBOARD

A. Textured Finish:
1. Primer:
a. 1 coat - 971 ACRY-PLEX Interior PVA Primer/Sealer Zero VOC.
2. Finish:
a. 2 coats - 1010 KM PROFESSIONAL Zero VOC Interior Acrylic Eggshell Enamel.

B. Smooth Wall Finishes:
1. Base Coat:
a. 1 coat - 95-25 KM PROFESSIONAL Wallboard Pre-Coat/Primer/Sealer (recommended for level 5 finish).
2. Primer:
a. 1 coat - 971 ACRY-PLEX Interior PVA Primer/Sealer Zero VOC.
3. Finish:
a. 2 coats - 1010 KM PROFESSIONAL Zero VOC Interior Acrylic Eggshell Enamel.

C. Colors:
a. Walls and Ceiling: KM 4745 – Steamboat Geyser
b. Accent Walls – KM 4741 – Executive Course

2.6 INTERIOR METAL

A. Ferrous Metal:
1. Primer:
a. 1 coat - 5725 DTM Acrylic Primer/Finish.
2. Finish:
a. 2 coats - 1448 Devcryl Semi-Gloss Finish

B. Galvanized Metal and Aluminum:
1. Primer:
a. 1 coat - 5725 DTM Acrylic Primer/Finish.
2. Finish:
a. 2 coats - 1010 KM PROFESSIONAL Zero VOC Interior Acrylic Eggshell Enamel.

PART 3 EXECUTION

3.1 EXAMINATION

A. Do not begin installation until substrates have been properly prepared.

B. If substrate preparation is the responsibility of another installer, notify Architect of

unsatisfactory preparation before proceeding.

C. Coordination of Work: Review other Sections in which primers are provided to ensure compatibility of the total system for various substrates. On request, furnish information on characteristics of finish materials to ensure use of compatible primers.
   1. Notify Architect about anticipated problems when using the materials specified over substrates primed by others.
   2. If a potential incompatibility of primers applied by others exists, obtain the following from the primer Applicator before proceeding:
      a. Confirmation of primer's suitability for expected service conditions.
      b. Confirmation of primer's ability to be top coated with materials specified.

3.2 PREPARATION

A. General: Remove hardware and hardware accessories, plates, machined surfaces, lighting fixtures, and similar items already installed that are not to be painted. If removal is impractical or impossible because of size or weight of the item, provide surface-applied protection before surface preparation and painting.
   1. After completing painting operations in each space or area, reinstall items removed using workers skilled in the trades involved.

B. Cleaning: Before applying paint or other surface treatments, clean substrates of substances that could impair bond of the various coatings. Remove oil and grease before cleaning.
   1. Schedule cleaning and painting so dust and other contaminants from the cleaning process will not fall on wet, newly painted surfaces.

C. Surface Preparation: Clean and prepare surfaces to be painted according to manufacturer's written instructions for each particular substrate condition and as specified.
   1. Provide barrier coats over incompatible primers or remove and reprime.
   2. Provide barrier coats over incompatible primers or remove primers and reprime substrate.
   3. Cementitious Substrates: Prepare concrete, brick, concrete masonry block, and cement plaster surfaces to be coated. Remove efflorescence, chalk, dust, dirt, grease, oils, and release agents. Roughen as required to remove glaze. If hardeners or sealers have been used to improve curing, use mechanical methods to prepare surfaces.
      a. Use abrasive blast-cleaning methods if recommended by coating manufacturer.
      b. Determine alkalinity and moisture content of surfaces by performing appropriate tests. If surfaces are sufficiently alkaline to cause the finish paint to blister and burn, correct this condition before application. Do not coat surfaces if moisture content exceeds that permitted in manufacturer's written instructions.
   4. Wood Substrates: Clean surfaces of dirt, oil, and other foreign substances with scrapers, mineral spirits, and sandpaper, as required. Smoothly sand surfaces exposed to view and dust off.
      a. Scrape and clean small, dry, seasoned knots, and apply a thin coat of white shellac or other recommended knot sealer, before applying primer.
      b. Immediately on delivery, prime edges, ends, faces, undersides, and backsides of wood to be coated.
      c. After priming, fill holes and imperfections in the finish surfaces with putty or plastic wood filler. Sand smooth when dried.
      d. Determine moisture content of surfaces by performing a moisture test. Do not coat if moisture content exceeds 15 percent.
   5. Ferrous-Metal Substrates: Clean ungalvanized ferrous-metal surfaces that have not been shop coated; remove oil, grease, dirt, loose mill scale, and other foreign substances. Use solvent or mechanical cleaning methods that comply with SSPC recommendations.
      a. Blast-clean steel surfaces as recommended by coating manufacturer and

according to SSPC-SP 10.

b. Treat bare and sandblasted or pickled clean metal with a metal treatment wash coat before priming.

c. Touch up bare areas and shop-applied prime coats that have been damaged. Wire brush, solvent clean, and touch up with same primer as the shop coat.

6. Nonferrous-Metal Substrates: Clean nonferrous and galvanized surfaces according to manufacturer's written instructions for the type of service, metal substrate, and application required.

a. Remove pretreatment from galvanized sheet metal fabricated from coil stock by mechanical methods.

D. Material Preparation: Carefully mix and prepare coating materials according to manufacturer's written instructions.

1. Maintain containers used in mixing and applying coatings in a clean condition, free of foreign materials and residue.
2. Stir materials before applying to produce a mixture of uniform density. Stir as required during application. Do not stir surface film into the material. Remove film and, if necessary, strain coating material before using.
3. Use only the type of thinners approved by manufacturer and only within recommended limits.
4. Tinting: Tint each undercoat a lighter shade to simplify identification of each coat when multiple coats of same material are applied. Tint undercoats to match the color of the finish coat, but provide sufficient differences in shade of undercoats to distinguish each separate coat.

3.3 APPLICATION

A. General: Apply paint according to manufacturer's written instructions. Use applicators and techniques best suited for substrate and type of material being applied.

B. General: Apply high-performance coatings according to manufacturer's written instructions.

1. Use applicators and techniques best suited for the material being applied.
2. Do not apply high-performance coatings over dirt, rust, scale, grease, moisture, scuffed surfaces, or conditions detrimental to forming a durable coating film.
3. Coating surface treatments, and finishes are indicated in the coating system descriptions.
4. Provide finish coats compatible with primers used.
5. The term "exposed surfaces" includes areas visible when permanent or built-in fixtures, convector covers, grilles, covers for finned-tube radiation, and similar components are in place. Extend coatings in these areas, as required, to maintain system integrity and provide desired protection.

C. Application Procedures: Apply coatings by brush, roller, spray, or other applicators according to manufacturer's written instructions.

1. The number of coats and film thickness required is the same regardless of application method.
2. Completed Work: Match approved Samples for color, texture, and coverage. Remove, refinish, or recoat work that does not comply with specified requirements.

3.4 FIELD QUALITY CONTROL

A. Owner reserves the right to invoke the following test procedure at any time and as often as Owner deems necessary during the period when paint is being applied:

1. Owner will engage a qualified independent testing agency to sample paint material being used. Samples of material delivered to Project will be taken, identified, sealed, and certified in the presence of Contractor.
2. Owner may direct Contractor to stop painting if test results show material being used

does not comply with specified requirements. Contractor shall remove non-complying paint from Project site, pay for testing, and repaint surfaces previously coated with the non-complying paint. If necessary, Contractor may be required to remove non-complying paint from previously painted surfaces if, on repainting with specified paint, the two coatings are incompatible.

3.5 CLEANING

A. After completing painting, clean glass and paint-spattered surfaces. Remove spattered paint by washing and scraping without scratching or damaging adjacent finished surfaces.

3.6 PROTECTION

A. Protect work of other trades, whether being painted or not, against damage from painting. Correct damage by cleaning, repairing or replacing, and repainting, as approved by Architect.

B. Provide "Wet Paint" signs to protect newly painted finishes. After completing painting operations, remove temporary protective wrappings provided by others to protect their work.

C. After work of other trades is complete, touch up and restore damaged or defaced painted surfaces.

END OF SECTION

CONFORMED

SECTION 10 14 16

PLAQUES

PART 1 GENERAL

1.1 SUMMARY

A. Section Includes:
   1. Cast bronze building dedication plaque.

B. Related Sections:
   1. Division 01: Administrative, procedural, and temporary work requirements.

1.2 REFERENCES

A. ASTM International (ASTM) E527 - Standard Practice for Numbering Metals and Alloys.

1.3 SUBMITTALS

A. Submittals for Review:
   1. Shop Drawings:
      a. Cross section through plaque showing border, background, and attachment methods.
      b. Layout showing artwork, letters, background, and textures.

PART 2 PRODUCTS

2.1 MANUFACTURERS

A. Acceptable Manufacturers:
   1. A.R.K. Ramos Mfg. Co., Inc. (www.arkramos.com)

B. Substitutions: Under provisions of Division 01

2.2 MATERIALS

A. Bronze: Copper UNS Alloy No. C38500, architectural bronze.

2.3 ACCESSORIES

A. Fasteners: Concealed, same material as plaque, type best suited to application.

2.4 FABRICATION

A. Cast plaques free from pits, gas holes, and warped surfaces.

B. Hand tool letters and artwork to sharp, clean edges.

C. Chemically clean completed castings.

D. Border: Raised single line.

E. Edges: Straight.

F. Letter Style: To be selected.

G. Artwork and Copy: As defined on following pages and approved Shop Drawings.

CONFORMED

2.5 FINISHES

A. Background: Sandblasted.

B. Borders, Letters, and Raised Artwork: Satin.

C. Apply two coats clear acrylic lacquer to exposed surfaces.

PART 3 EXECUTION

3.1 INSTALLATION

A. Mount plaques using concealed fasteners.

B. Set plumb, level, and rigid.

C. Isolate dissimilar metals from contact by use of bituminous coating.

TURLOCK REGIONAL TRANSIT CENTER
PHASE 2

TURLOCK CITY COUNCIL
GARY SOISETH, MAYOR

AMY BUBLAK
MATTHEW JACOB
BILL DEHART JR.
GIL ESQUER

ARCHITECT
PIRES, LIPOMI + NAVARRO ARCHITECTS

GENERAL CONTRACTOR
XXX

PROJECT STAFF
CITY MANAGER, GARY R. HAMPTON
CITY ATTORNEY, PHAEDRA A. NORTON
CITY ENGINEER, MICHAEL G. PITCOCK
COMMUNITY HOUSING MANGER, MARYN W. PITT
TRANSIT PLANNER, SCOTT MEDEIROS

DEDICATED XXX

END OF SECTION

CONFORMED

SECTION 10 14 23

INTERIOR PANEL SIGNS

PART 1 GENERAL

1.1 SUMMARY

A. Section Includes:
   1. Plastic interior panel signs.

B. Related Sections:
   1. Division 01: General Requirements

1.2 SUBMITTALS

A. Submittals for Review:
   1. Shop Drawings: Include sign locations, sizes, mounting heights, and content.
   2. Samples:
      a. Material samples showing available colors.
      b. After color selection, submit Typical sign illustrating pictograms, characters, and Braille indications.

1.3 QUALITY ASSURANCE

A. Conform to 2013 California Building Code for sign design, construction, location, and mounting height.

B. Mockup:
   1. Size: One full-size sign.
   2. Locate where directed.
   3. Approved mockup may remain as part of the Work.

PART 2 PRODUCTS

2.1 MANUFACTURERS

A. Acceptable Manufacturers:
   1. APCO Graphics, Inc.
   2. Best Sign Systems, Inc.
   3. Seton Identification Products.

B. Substitutions: Under provisions of Division 01.

2.2 MATERIALS

A. Signs:
   1. Type: Photo polymer sheet consisting of minimum 0.032 inch thick moisture resistant, non-glare nylon photo polymer on ultraviolet resistant clear PETG sign base, single piece construction.
   2. Thickness: 1/8 inch.
   3. Color: To be selected from manufacturer's full color range.

2.3 ACCESSORIES

A. Adhesive:
   1. Type recommended by sign manufacturer.

2.4 FABRICATION

A. Fabricate signs by reverse engraving process to produce characters and graphics in contrasting color, raised

B. Characters:
1. See drawings for characters size and height requirements

C. Pictograms: Universal accessibility symbols. . See drawings for additional information.

D. Provide Braille indications for each character. See drawings for additional information.

E. Corners: Square.

F. Edges: Square

PART 3 EXECUTION

3.1 PREPARATION

A. Clean surfaces of loose and foreign matter.

3.2 INSTALLATION

A. Install in accordance with manufacturer's instructions and approved Shop Drawings.

B. Locate signs on at locations indicated on Drawings.

3.3 SCHEDULE

LOCATION	SIGN SIZE	CONTENT
Men’s Toilets	Per drawings	“MEN” and male pictogram
Women’s Toilets	Per drawings	“WOMEN” and female pictogram
Unisex Toilets		“TOILET” and male and female pictograms
Informational Signage	varies	varies

END OF SECTION

CONFORMED

SECTION 10 14 29

DIMENSIONAL LETTERS

PART 1 GENERAL

1.1 SUMMARY

A. Section Includes:
   1. Aluminum individual letters.

B. Related Sections:
   1. Division 01: General Requirements

1.2 REFERENCES

A. American Architectural Manufacturers Association (AAMA):
   1. 611 - Voluntary Specification for Anodized Architectural Aluminum.
   2. 2603 - Voluntary Specification, Performance Requirements and Test Procedures for Pigmented Organic Coatings on Architectural Extrusions and Panels.
   3. 2604 - Voluntary Specification, Performance Requirements and Test Procedures for High Performance Organic Coatings on Architectural Extrusions and Panels.
   4. 2605 - Voluntary Specification, Performance Requirements and Test Procedures for Superior Performing Organic Coatings on Architectural Extrusions and Panels.

B. ASTM International (ASTM):
   1. A666 - Standard Specification for Annealed or Cold-Worked Austenitic Stainless Steel Sheet, Strip, Plate, and Flat Bar.
   2. B85 - Standard Specification for Aluminum-Alloy Die Castings.
   3. B209 - Standard Specification for Aluminum-Alloy Sheet and Plate.
   4. E527 - Standard Practice for Numbering Metals and Alloys.

1.3 SUBMITTALS

A. Submittals for Review:
   1. Shop Drawings: Indicate character style, layout, dimensions, materials, finishes, and attachment.
   2. Samples: Typical letter in specified size, style, and finish.

PART 2 PRODUCTS

2.1 MANUFACTURERS

A. Design Basis: Contract Documents are based on products by Gemini, Inc.

B. Equivalent products by following manufacturers are acceptable:
   1. A.R.K. Ramos Mfg. Co., Inc.
   2. National Sign, Inc.

C. Substitutions: Under provisions of Division 01.

2.2 MATERIALS

A. Aluminum Castings:
   1. ASTM B85, alloy and temper best suited to application.

CONFORMED

2.3 ACCESSORIES

A. Anchors: Type best suited to application.

2.4 FABRICATION

A. Fabricate letters in accordance with approved Shop Drawings.

B. Cast letters from aluminum, free from pits, gas holes, and warped surfaces.

C. Hand tool to sharp, clean edges.

D. Character Style: Gotham.

E. Height: as indicated on drawings.

F. Mounting Method: Surface or as indicated on drawings

2.5 FINISHES

A. Aluminum:

1. Painted – Selected from manufacturers standard range, sprayed with polyurethane semi-gloss, baked.

PART 3 EXECUTION

3.1 INSTALLATION

A. Install letters in accordance with manufacturer's instructions and approved Shop Drawings.

B. Set plumb, level, rigid, and aligned.

END OF SECTION

CONFORMED

SECTION 10 21 16

PLASTIC TOILET COMPARTMENTS

PART 1 GENERAL

1.1 SUMMARY

A. Section Includes:
   1. Solid plastic toilet partitions.
   2. Solid plastic urinal screens.

B. Related Sections:
   1. Division 01: General Requirements
   2. Section 10 2813 - Toilet Accessories.

1.2 SUBMITTALS

A. Submittals for Review:
   1. Shop Drawings: Include layout, dimensions, materials, panel construction, finishes, hardware, and accessories.
   2. Samples: 3 x 3inch panel samples showing available colors.

PART 2 PRODUCTS

2.1 MANUFACTURERS

1. Design Basis: Contract Documents are based on products by Accurate Partitions Corp.

B. Equivalent products by following manufacturers are acceptable:
   1. Ampco Products, Inc.
   2. Global Partitions.
   3. Scranton Products.

C. Substitutions: Not permitted.

2.2 MATERIALS

A. Phenolic Sheet:
   1. Solid phenolic core manufactured of multiple layers of phenolic resin-impregnated Kraft paper compressed under heat and pressure, with heat-fused melamine laminate facings.

B. Head Rail:
   1. Hollow, extruded aluminum, with cast wall sockets.

C. Hardware: Plated steel, stainless steel, or aluminum.
   1. Hinges: Gravity rising or non rising spring tension actuated; conceal operable parts in door.
   2. Latches: Sliding type requiring maximum 5 pound force to operate, with emergency release operation.
   3. Coat hook and door stop: Combination type with rubber tip.
   4. Door strike and keeper with rubber bumper.

2.3 ACCESSORIES

A. Fasteners: Stainless steel, theft resistant where exposed.

2.4 FABRICATION

A. Configurations:
   1. Toilet partitions: Floor mounted, overhead braced
   2. Urinal screens: Wall hung continuously supported

B. Construction:
   1. Solid phenolic sheet
   2. Panels: Minimum 1/2 inch thick.
   3. Doors and pilasters: Minimum 3/4 inch thick.

C. Provide cutouts for toilet room accessories specified in Section 10 2813. Mark locations for partition mounted accessories.

D. Pilaster Shoes: Formed stainless steel.

2.5 FINISHES

A. Panels, Doors, and Pilasters: color to be selected from manufacturer's full color range.

B. Hardware and Accessories:
   1. Stainless steel: No. 4 satin.

PART 3 EXECUTION

3.1 INSTALLATION

A. Install in accordance with manufacturer’s instructions and approved Shop Drawings.

B. Set partitions straight, plumb, level, and aligned.

C. Provide 3/8 to 1/2inch vertical clearances between walls and panels and between walls and end pilasters.

D. Attach panel [and head rail] brackets to walls using appropriate anchor devices.

E. Adjust for floor variations with screw jack integral in pilasters. Conceal floor fastenings with pilaster shoes.

F. Equip doors with two hinges, door latch, door strike and keeper, and bumper/coat hook. Provide one additional bumper/hook on inside of outswinging doors.

3.2 ADJUSTING

A. Adjust hardware for proper operation.

B. Adjust door hinges to hold door open 10 degrees when not latched.

C. Sand out and polish minor scratches and abrasions to match factory finish.

END OF SECTION

CONFORMED

SECTION 10 26 00

WALL PROTECTION

PART 1 GENERAL

1.01 SUMMARY

A. This section includes the following types of wall protection systems:
   1. Wall Covering
B. Related sections: The following sections contain requirements related to this section: 09-29-00 Gypsum Board

1.02 REFERENCES

A. American Society for Testing and Materials (ASTM)
B. California Building Code (CBC)
C. California Green Building Standards Code

1.03 SUBMITTALS

A. General: Submit the following in accordance with conditions of contract and Division 1 specification section.
B. Product data and detailed specifications for each system component and installation accessory required, including installation methods for each type of substrate.
C. Shop drawings showing locations, extent and installation details of wall covering products.
D. Samples for verification purposes: Submit the following samples, as proposed for this work, for verification of color, texture, pattern and thickness:
   1. Sample of each product specified.
E. Product test reports from a qualified independent testing laboratory showing compliance of each component with requirements indicated.
F. Maintenance data for wall protection system components for inclusion in the operating and maintenance manuals specified in Division 1.

1.04 QUALITY ASSURANCE

A. Installer qualifications: Installer must have no less than 3 years experience in installation of systems similar in complexity to those required for this project.
B. Manufacturer’s qualifications: Not less than 5 years experience in the production of specified products and a record of successful in-service performance.
C. Code compliance: Assemblies should conform to all applicable codes including IBC, UBC, SBCCI, BOCA, Life Safety and CA 01350.
D. Fire performance characteristics: Provide engineered PETG wall protection system components with UL label indicating that they are identical to those tested in accordance with ASTM E84 for Class 1 characteristics listed below:
   1. Flame spread: 25 or less
   2. Smoke developed: 450 or less
E. Impact Strength: Provide assembled wall protection units that have been tested in accordance with the applicable provisions of ASTM F476.
F. Chemical and stain resistance: Provide wall protection system components with chemical and stain resistance in accordance with ASTM D543.
G. Color match: Provide wall protection components that are color matched in accordance with the following:
   1. Delta Ecmc of no greater than 1.0 using CIELab color space.

H. Single source responsibility: Provide all components of the wall protection system manufactured by the same company to ensure compatibility of color, texture and physical properties.

1.05 DELIVERY, STORAGE AND HANDLING

A. Deliver materials to the project site in unopened original factory packaging clearly labeled to show manufacturer.
B. Store materials in original, undamaged packaging in a clean, dry place out of direct sunlight and exposure to the elements. A minimum room temperature of 40ºF (4ºC) and a maximum of 100ºF (38ºC) should be maintained.
C. Materials must be stored flat.

1.06 PROJECT CONDITIONS

A. Materials must be acclimated in an environment of 65-75ºF (18-24ºC) for at least 24 hours prior to beginning the installation.
B. Installation areas must be enclosed and weatherproofed before installation commences.

PART 2 – PRODUCTS

2.01 MANUFACTURERS

A. Design Basis: Contract Documents are based on products by Construction Specialties, Inc.
B. Substitutions: Under provisions of Division 01.

2.02 MATERIALS

A. Engineered PETG: Rigid sheet should be high impact Acrovyn 4000 with nominal .040" (1.02mm) thickness and supplied in 4' x 8' or 10' sheet sizes in standard Suede texture. Color selected by Architect from manufacturers range of standard solid colors. Color-matched caulk, plastic trims or metal trims as needed for joints/transitions shall be provided.

2.03 FABRICATION

A. General: Fabricate wall covering to comply with requirements indicated for design, dimensions, detail, finish and sizes.

2.04 ACCESSORIES

A. Acrovyn Wall Covering shall be furnished as a complete packaged system, containing all adhesive. Adhesive shall be water based and non-hazardous. Water based primer is also available for purchase.

PART 3 – EXECUTION

3.01 EXAMINATION

A. Verification of conditions: Examine areas and conditions under which work is to be performed and identify conditions detrimental to proper or timely completion.
    1. Do not proceed until unsatisfactory conditions have been corrected.

3.02 PREPARATION

A. Surface preparation: Prior to installation, clean substrate to remove dirt, debris and loose particles. Perform additional preparation procedures as required by manufacturer's instructions.

B. Protection: Take all necessary steps to prevent damage to material during installation as required in manufacturer's installation instructions.

3.03 INSTALLATION

A. Install the work of this section in strict accordance with the manufacturer's recommendations using approved adhesive.
B. Temperature at the time of installation must be between 65-75ºF (18-24ºC) and be maintained for at least 48 hours after the installation to allow for proper adhesive set up.
C. Relative humidity shall not exceed 80%.
D. Do not expose wall covering to direct sunlight during or after installation. This will cause the surface temperature to rise, which in turn will cause bubbles and delamination.

3.04 CLEANING

A. General: Immediately upon completion of installation, clean wall covering and accessories in accordance with manufacturer's recommended cleaning method.
B. Remove surplus materials, rubbish and debris resulting from installation as work progresses and upon completion of work.

3.05 PROTECTION

A. Protect installed materials to prevent damage by other trades. Use materials that may be easily removed without leaving residue or permanent stains.

END OF SECTION

CONFORMED

SECTION 10 28 13

TOILET ACCESSORIES

PART 1 GENERAL

1.1 SUMMARY

A. Section Includes:
   1. Toilet accessories.
   2. Framed mirrors.

B. Related Sections:
   1. Division 01: General Requirements
   2. Division 26: Connection to power supply.

1.2 REFERENCES

A. ASTM International (ASTM):
   1. A123/A123M - Standard Specification for Zinc (Hot-Galvanized) Coatings on Iron and Steel Products.
   2. A269 - Standard Specification for Seamless and Welded Austenitic Stainless Steel Tubing for General Service.
   3. A666 - Standard Specification for Annealed or Cold-Worked Austenitic Stainless Steel Sheet, Strip, Plate, and Flat Bar.
   4. A1008/A1008M - Standard Specification for Steel, Sheet, Cold-Rolled, Carbon, Structural, High-Strength Low-Alloy and High-Strength Low-Alloy with Improved Formability.
   5. B456 - Standard Specification for Electrodeposited Coatings of Copper Plus Nickel Plus Chromium and Nickel Plus Chromium.
   6. C1036 - Standard Specification for Flat Glass.

1.3 SUBMITTALS

A. Submittals for Review:
   1. Product Data:
      a. Schedule accessories by room; show plans and elevations, and identify room name and number, type and quantity of accessories, and mounting heights.
      b. Include manufacturer's brochures showing sizes, details of function, finishes, and attachment methods.
   2. Warranty: Sample warranty form.

1.4 QUALITY ASSURANCE

A. Conform to applicable accessibility codes for locating accessories.

1.5 WARRANTIES

A. Furnish manufacturer’s10year warranty providing coverage against mirror silver spoilage.

PART 2 PRODUCTS

2.1 MANUFACTURERS

A. Design Basis: Contract Documents are based on products by Bobrick.

B. Equivalent products by following manufacturers are acceptable:
   1. American Specialties, Inc.

2. Bradley Corp.
3. GAMCO.

C. Substitutions: Not permitted.

2.2 MATERIALS

A. Stainless Steel:
1. Sheet: ASTM A666, Type 304, rollable temper.
2. Tubing: ASTM A269.

B.

2.3 ACCESSORIES

A. Fasteners: Stainless steel where exposed, hot dip galvanized where concealed; type best suited to substrate conditions.

2.4 FABRICATION

A. Use stainless steel for exposed surfaces; galvanized steel may be used in concealed locations.

B. Form exposed surfaces from single sheet of stock, free from joints, and flat, without distortion.

C. Weld joints of fabricated components and grind smooth.

D. Fabricate grab bars of tubing, free of visible joints, return to wall with end attachment flanges.

E. Fabricate soap dispensers to operate with less than 5 pound force.

F. Provide hangers, adapters, anchor plates, and accessories required for installation.

G. Key locks alike; furnish six keys.

H. Shop assemble units and package complete with anchors and fittings.

2.5 FINISHES

A. Stainless Steel: No. 4 satin.

PART 3 EXECUTION

3.1 INSTALLATION

A. Install in accordance with manufacturer's instructions.

B. Set plumb, level, square, and rigid.

C. Install wiring between power supply and accessories.

3.2 SCHEDULE

MARK	DESCRIPTION	MANUFACTURER	MODEL NO.
A	Towel Dispenser and Waste Receptacle	Bobrick	B-369
B	Toilet Tissue Dispenser	Bobrick	B-2888

CONFORMED

MARK	DESCRIPTION	MANUFACTURER	MODEL NO.
C	Soap Dispenser	Bobrick	818615
D	Toilet Seat Cover Dispenser	Bobrick	B-211
E	Feminine Tampon/Napkin Disposal	Bobrick	B-270
F	Grab Bars	Bobrick	B-5806
G	Mirror	Bobrick	B-165
H	Electric Hand Dryer	Dyson	Airblade dB

END OF SECTION

CONFORMED

SECTION 10 44 13

FIRE EXTINGUISHERS AND CABINETS

PART 1 - GENERAL

1.01 SUMMARY

A. Section Includes:

1. Fire extinguishers .
2. Extinguisher cabinets.
3. Accessories.

B. Related Requirements:

1. Drawings and general provisions of the Contract, including General and Supplementary Conditions and Division 01 Specification Sections, apply to this Section.

2. Section 01 33 00 - Submittal Procedures: For administrative and procedural requirements for processing of submittals during the construction phase.
3. Section 01 77 00 - Closeout Procedures: For administrative and procedural requirements for completion of the Work.

8. Section 21 13 13 – Wet Pipe Sprinkler Systems: For sprinkler systems using water for fire extinguishing and suppression.

1.02 REFERENCES

A. Reference Standards:

1. ASTM International (ASTM):
   a. ASTM E814-11a, Standard Test Method for Fire Tests of Penetration Firestop Systems.

2. California Building Standards Code:
   a. California Building Code (CBC) – 2013 Edition.
3. Intertek Testing Services/Warnock-Hersey International (ITS/WHI)
4. National Fire Protection Association (NFPA):
   a. NFPA 10-2010, Standard for Portable Fire Extinguishers: For criteria covering installations for Class A, B, C, D, and K hazards as well as the selection, inspection, maintenance, recharging, and testing of portable fire extinguishing equipment.
5. Underwriters Laboratories, Inc. (UL)
6.

1.03 ACTION SUBMITTALS

A. Submit in accordance with Division 01

1. Product Data:
   a. Cabinets: Materials description for fire extinguisher cabinets include roughing-in dimensions, details showing mounting methods, relationships to surrounding construction, door hardware, cabinet type and materials, trim style and door construction, door style and materials.

b. Extinguishers: Materials description for fire extinguishers; include ratings and classifications.
c. Installation instructions for each product specified.

2. Shop Drawings:
   a. Small-scale plans showing locations of fire extinguisher cabinets and individual fire extinguishers.
   b. Schedules showing each type of cabinet and extinguisher to ensure proper fit and function.
   c. Indicate installation procedures and accessories required for a complete installation.
3. Samples:
   a. Extinguisher Cabinet Door and Trim Finishes: For each type of exposed finish required, prepared on samples of size indicated below:
      1) Size: 6 inches (150 mm) square.

1.04 INFORMATIONAL SUBMITTALS

A. Warranty: Sample of special warranty.

1.05 QUALITY ASSURANCE

A. Comply with standards referenced in Article 1.02 - REFERENCES.
B. Provide fire extinguishers, cabinets and accessories produced by a single manufacturer.
C. Provide fire extinguishers of type approved by UL, State Fire Marshal's Office, and acceptable to local fire marshal.

1.06 DELIVERY, STORAGE, AND HANDLING

A. Deliver, store, and handle fire protection specialties and related materials using means and methods that will prevent damage, deterioration, or loss.
   1. Deliver components in manufacturer's original packaging, properly labeled for identification.

1.07 WARRANTY

All Fire Protection Products (except fire extinguishers) carry a one year warranty after date of shipment against defects in materials or workmanship. Fire extinguishers carry a longer warranty. We will replace or repair any product found defective within this period. No other warranty expressed or implied is valid. Manufacturer’s warranty, terms and conditions apply in all cases. Please see complete warranty on our website for more details.

PART 2 - PRODUCTS

2.01 FIRE PROTECTION SPECIALTIES MANUFACTURERS

A. Basis of Design Manufacturer:

JL Industries, Inc., a division of Activar Construction Products Group
4450 West 78th St. Circle
Bloomington, MN 55435-5416
www.activarcpg.com

B. Substitutions: As allowed by Division 01.

2.02 FIRE EXTINGUISHERS

A. Contractor to consult local fire marshal for exact fire extinguisher type and size requirements

B. Halotron® Type: Extinguisher unit containing a clean extinguishing agent Halotron® 1 approved by the EPA, accepted and specified by the government, and approved by the FAA for use in airports; nonconductive.
   1. Construction: Drawn steel cylinder with steel siphon tube, O-ring seal, power cone discharge system, replaceable valve stem seal, visual pressure gage, pull pin, and upright squeeze grip.
   2. Finish: Factory powder-coated; Red.
   3. Effectiveness (Rating): Class A, B, and C fires.
   4. Model Identification and UL Rating: Mercury 2A-10BC.

H. Accessories:
   1. Mounting Brackets:

      a. Standard Brackets: Provide manufacturer's standard steel bracket, designed to secure fire extinguisher to wall or structure, of sizes required for types and capacities of fire extinguishers indicated.

2.03 EXTINGUISHER CABINETS

A. Cabinet with Door: Cosmopolitan Series,
   1. Cabinet Style: Semi-recessed
   2. Components:
      a. Tub: Cold-rolled steel.
         1) Finish: Factory-applied powder coat paint finish.

      b. Door Construction 180 clear anodized aluminum. Flush cabinet doors with a 5/8" door stop are attached by a continuous hinge and equipped with zinc-plated handle and roller catch. ,

      c. Trim Construction:
         1) Clear anodized aluminum.

      d. Trim Style and Depth:

         1) Semi-Recessed Cabinet:
            a) Square Edge: 1-1/4 inch
            a) Standard Profile: Square edge.

      e. Door Style:

         1) Style V: Vertical duo with pull

         2) Lettering Orientation:
            a) Vertical Lettering - White

2.05 SOURCE QUALITY CONTROL

A. Ship extinguishers to the Project site fully charged, EXCEPT those which contain water as an extinguishing agent, if any.
B. Obtain Fire Extinguishers and Fire Extinguisher Brackets from same manufacturer to ensure compatibility.

CONFORMED

PART 3 - EXECUTION

3.01 EXAMINATION

A. Examine walls and partitions for suitable framing depth and blocking where recessed and semi-recessed cabinets will be installed, and blocking where surface mounted cabinets will be installed.
   1. Notify the Contractor in writing of conditions detrimental to proper and timely completion of the installation.
   2. Proceed with installation only after unsatisfactory conditions have been corrected.

3.02 INSTALLATION

A. Install cabinets in locations and at mounting heights indicated, or if not indicated, at heights to comply with applicable regulations of governing authorities.

   1. Prepare recesses in walls for fire extinguisher cabinets as required by type and size of cabinet and style of trim and to comply with manufacturer's instructions.
   2. Securely fasten mounting brackets and fire extinguisher cabinets to structure, square and plumb, to comply with manufacturer=s instructions.
   3. Maintain fire ratings where cabinets are recessed into fire-rated wall systems.

C. Cabinet Lettering:
   1. Location: Where shown or directed

   2. Apply lettering on factory-finished (no further painting specified) either at the factory or just prior to Substantial Completion.

3.03 FIELD QUALITY CONTROL

A. Ensure that each extinguisher is fully charged, and that inspection of each extinguisher has been performed, as evidenced by the National Association of Fire Equipment Distributors certification tag, just prior to turnover.

3.04 ADJUSTING AND CLEANING

A. Remove temporary protective coverings and strippable films, if any, as fire protection cabinets are installed unless otherwise indicated in manufacturer's written installation instructions.
B. Adjust fire protection cabinet doors to operate easily without binding. Verify that integral locking devices operate properly.
C. On completion of fire protection cabinet installation, clean interior and exterior surfaces as recommended by manufacturer.
D. Touch up marred finishes, or replace fire protection cabinets that cannot be restored to factory-finished appearance. Use only materials and procedures recommended or furnished by fire protection cabinet and mounting bracket manufacturers.
E. Replace fire protection cabinets that have been damaged or have deteriorated beyond successful repair by finish touchup or similar minor repair procedures.

END OF SECTION

CONFORMED

SECTION 10 51 13

METAL LOCKERS

PART 1 GENERAL

1.1 SUMMARY

A. Section Includes:
1. Metal locker units with hinged doors.
2. Metal bases, tops and filler panels

B. Related Sections:
1. Division 01: General Requirements

1.2 REFERENCES

A. ASTM International (ASTM):
1. A1008/A1008M - Standard Specification for Steel, Sheet, Cold-Rolled, Carbon, Structural, High-Strength Low-Alloy and High-Strength Low-Alloy with Improved Formability.

1.3 SUBMITTALS

A. Submittals for Review:
1. Shop Drawings: Include dimensioned layout, elevations, trim, closures, and accessories.
2. Product Data: Manufacturer's descriptive data.
3. Samples: paint samples showing available colors.

PART 2 PRODUCTS

2.1 MANUFACTURERS

A. Acceptable Manufacturers
1. List Industries Inc.
2. Lyon Workspace Products.
3. Penco Products, Inc.
4. Republic Storage Systems Co., Inc.

B. Substitutions: Under provisions of Division 01.

2.2 MATERIALS

A. Steel Sheet: ASTM A1008/A1008M.

2.3 COMPONENTS

A. Lockers:
1. Type: Solid.
2. Configuration: Triple tier.
3. Size: 12 inches wide x 18 inches deep
4. Mounting: Free standing, anchored to wall
5. Class: Conventional.
6. Construction:

CONFORMED

a. Frame and door: Minimum 16 gage [galvanized] steel, welded joints.
b. Sides , tops, and back: Minimum 24 gage steel.
c. Ends [, sloped tops,] and filler panels: Minimum 20 gage steel.

7. Latching device: Tamper proof automatic latch.
8. Locks: Padlock provisions.
9. Accessories:
   a. For each locker: Two prong hooks, metal number plate, and rubber bumper.
   b. 4 inch high closed base.
   c. End and filler panels.
   d. Sloped metal top with end closures.

2.4 FINISHES

A. Steel: Baked enamel, color to be selected from manufacturer's full color range.

PART 3 EXECUTION

3.1 INSTALLATION

A. Install in accordance with manufacturer's instructions and approved Shop Drawings.

B. Set on prepared locker base.

C. Set plumb, level, and aligned.

D. Attach lockers to supporting construction with anchors best suited to substrate conditions.

E. Bolt adjacent locker units together to provide rigid installation.

F. Install end panels, filler panels, sloped tops and bases.

3.2 ADJUSTING

A. Adjust doors and latches to operate correctly.

B. Touch up minor scratches and abrasions to match factory finish.

END OF SECTION

SECTION 10 55 23

MAILBOXES

SECTION ADDED IN ADDENDUM 2

PART 1 GENERAL

1.1 SECTION INCLUDES

A. Horizontal Mailboxes
1.Rear-loading interior mailboxes.

1.2 RELATED SECTIONS

A. Section 05400 - Cold Formed Metal Framing: Framed wall openings to receive mailboxes.

B. Section 092900 - Gypsum Board.

1.3 REFERENCES

A. CBC – California Building Code.

B. ASTM A 666 - Specification for Austenitic Stainless Steel Sheet, Strip, Plate and Flat Bar.

C. ASTM B 209 - Specification Aluminum and Aluminum Alloy Sheet and Plate.

D. ASTM B 221 - Specification Aluminum and Aluminum Alloy Extruded Bar, Rods, Wire, Shapes, and Tubes.

1.4 SUBMITTALS

A. Submit under provisions of Division 1.

B. Product Data: Provide manufacturer's standard catalog data for specified products. Manufacturer's data sheets on each product to be used, including:
1. Construction details, material descriptions, dimensions and finishes.
2. Preparation instructions and recommendations.
3. Storage and handling requirements and recommendations.
4. Installation methods.

C. Shop Drawings: Prepared specifically for this project; show dimensions of mail boxes, wall cuts, and interface with other products.

1.5 REGULATORY REQUIREMENTS

A. Private Mail Delivery – not subject to USPS regulations.

B. Comply with Americans with Disabilities Act Accessibility Guidelines (ADAAG) and California Building Code Accessibility requirements.

1.6 QUALITY ASSURANCE

A. Manufacturer Qualifications: Manufacturer shall have a Quality System in place to ensure and be able to substantiate that manufactured units conform to requirements and match the approved design and must be ISO 9001:2008 certified.

1.7 DELIVERY, STORAGE, AND HANDLING

A. Inspect the materials upon delivery to assure that specified products have been received.

B. Store materials protected from exposure to harmful weather conditions.

C. Handle materials to prevent damage or marring of finish.

1.8 WARRANTY

A. Manufacturer's standard warranty to repair or replace components of postal specialties that fail in materials or workmanship within five years from date of purchase.

PART 2 PRODUCTS

2.1 MANUFACTURERS

A. Basis of Design Manufacturer: Florence Corporation, 5935 Corporate Drive, Manhattan, KS 66503; ASD. Tel: (785)323-4400, Tel: (800)275-1747. Fax: (800)275-5081. Email: sales@florencecorporation.com. Web: www.florencemailboxes.com.

B. Substitutions: As outlined in Division 1

2.2 WALL-MOUNTED CENTRALIZED MAIL RECEPTACLES (MAILBOXES)

A. Rear-Loading Mailboxes: Consisting of multiple compartments enclosed within recessed wall box. Provide access to compartments for distributing incoming mail from rear of unit with accessibility to entire group of compartments. Provide access to each compartment for removing mail by swinging compartment door.
   1. Model: Series 1700 by Florence Corporation.
   2. Compartments: 21 compartments (min.).
   3. Rear-Loading Door: Side hinged, fabricated from aluminum sheet with full-length, extruded aluminum integral hinge on one side and positive-latching mechanism on the other. Fabricate rear-loading door to open not less than 90 degrees and to remain open while mail is deposited.
      a. Rear-Door Lock: Door prepared to receive common key lock furnished

by manufacturer.

4. Compartment Doors: Fabricated from aluminum extrusion. Equip each compartment door with lock, engraved tenant identification, and concealed, fill-length continuous hinge on one side.
   a. Tenant Identification:
      1) Alpha-numeric engraving.
      2) Clear plastic cardholder recessed on face of compartment door.
   b. Compartment Door Locks:
      1) 5-pin tumbler, cylinder cam locks capable of at least 1000 key changes; with 2 keys for each compartment door. Key each compartment differently.
5. Frames: Fabricated from extruded aluminum with snap-on trim.
6. Concealed Components and Mounting Frames:
   a. Aluminum.
7. Material and Finish: Aluminum.
   a. Finish: Anodized aluminum: Clear.

PART 3 EXECUTION

3.1 EXAMINATION

A. Verify that openings in wall are correctly located, aligned, and sized for mailboxes.

B. Installer's Examination:
   1. Examine conditions under which construction activities of this section are to be performed; submit written notification if such conditions are unacceptable.
   2. Beginning installation indicates acceptance of conditions.

3.2 INSTALLATION

A. Install mail boxes in accordance with shop drawings and manufacturer's printed installation instructions.

B. Align, plumb, and level; anchor in accordance with manufacturer's requirements.

3.3 ADJUSTING

A. Adjust doors and locks to operate correctly.

3.4 CLEANING

A. Clean surfaces with mild dish detergent. Do not use harsh abrasive cleaners. Lubricate locks with graphite type lubricants only.

3.5 PROTECTION OF INSTALLED PRODUCTS

A. Protect finishes from damage by construction activities.

END OF SECTION

CONFORMED

SECTION 10 71 13

EXTERIOR SUN CONTROL DEVICES

PART 1 - GENERAL

1.1 RELATED DOCUMENTS

A. Drawings and general provisions of the Contract, including General and Supplementary Conditions and Division 1 Specification Sections, apply to this Section.

1.2 SUMMARY

A. This Section includes the following:
   1. Horizontal and or inclined fixed, extruded-aluminum sun control assemblies.

B. Related Sections include the following:
   1. Division 5 Section "Structural Steel" for supporting structure.

1.3 PERFORMANCE REQUIREMENTS

A. Structural Performance: Provide exterior sun control assemblies capable of withstanding the effects of loads and stresses from dead loads, live loads, snow loads, snow drift loads, wind loads, and normal thermal movement without evidencing permanent deformation of assembly or components including blades, frames, and supports; noise or metal fatigue caused by blade rattle or flutter; or permanent damage to fasteners and anchors. Assemblies shall comply with state and local codes.

1. Dead Load: As required by applicable building code.
2. Live Load: As required by applicable building code.
3. Snow Load: As required by applicable building code.
4. Snow Drift Load: As required by applicable building code.
5. Wind Load: Uniform pressure (velocity pressure) of (Insert Design Criteria) lb./sq. ft. (Insert Design Criteria Pa), acting inward or outward.
6. Thermal Movements: Provide assemblies that allow for thermal movements resulting from the following maximum change (range) in ambient and surface temperatures by preventing buckling, opening of joints, overstressing of components, and other detrimental effects:

   a. Temperature Change (Range): 120 deg F (67 deg C), ambient; 180 deg F (100 deg C), material surfaces.

1.4 SUBMITTALS

A. Product Data: Manufacturer's technical and descriptive data on sun control components and assemblies.

B. Shop Drawings: For exterior sun control assemblies and accessories. Include plans; elevations; sections; and details showing profiles, angles, and spacing of blades, frames and supports. Show unit dimensions related to supporting and adjoining structures and construction. Indicate anchorage details and locations.

C. Structural Calculations: Submit a comprehensive analysis of design loads, including dead loads, live loads, snow loads, snow drift loads, wind loads and thermal movement. Design calculations shall identify the moment and shear forces transferred to the structure or supports through the installation connections.

D Structural Calculations shall be stamped and signed by a professional engineer registered in jurisdiction where Project is located.

E. Samples for Initial Selection: Manufacturer's color charts showing the full range of colors available for units with factory-applied color finishes.

F. Samples for Verification: Of each type of metal finish required, prepared on samples of same thickness and material indicated for final work. Where finishes involve normal color and texture variations, include sample sets showing the full range of variations expected.

G. Qualification Data: For firms and persons specified in "Quality Assurance" Article to demonstrate their capabilities and experience. Include lists of completed projects with project names and addresses, names and addresses of architects and owners, and other information specified.

1.5 QUALITY ASSURANCE

A. Professional Engineer Qualifications: A professional engineer who is legally qualified to practice in jurisdiction where Project is located and who is experienced in providing engineering services of kind indicated. Engineering services are defined as those performed for installations of sun controls that are similar to those indicated for this Project in material, design, and intent.

1. Welding Standards: As follows:

a. Comply with AWS D1.2, "Structural Welding Code--Aluminum."
b. Comply with AWS D1.3, "Structural Welding Code--Sheet Steel."
c. Certify that each welder has satisfactorily passed AWS qualification tests for welding processes involved and, if pertinent, has undergone recertification. SMACNA Standard: Comply with SMACNA's "Architectural Sheet Metal Manual" recommendations for fabrication, construction details, and installation procedures.

1.6 PROJECT CONDITIONS

A. Field Measurements: Verify actual supporting and adjoining construction by field measurements before fabrication; and indicate recorded measurements on final Shop Drawings. Coordinate construction to ensure that sun control assemblies fit properly to supporting and adjoining construction and coordinate schedule with construction progress to avoid delaying the work.

1. Established Dimensions: Where field measurements cannot be made without delaying the work, verify dimensions and proceed with fabricating of sun control assemblies without field measurements. Coordinate construction to ensure that sun control assemblies correspond to established dimensions.

PART 2 - PRODUCTS

2.1 MANUFACTURERS

A. Manufacturers:

1. Basis of Design Manufacturer:

Perfection Architectural Systems, Inc.
2310 Mercator Drive
Orlando, FL 32807
800-238-7207

Fax 407-671-8252
www.perfectionarch.com

1. Substitutions: Per Division 01

2.2 MATERIALS

A. Aluminum Extrusions: ASTM B 221 (ASTM B 221M), alloy 6063-T5 or T-52.

B. Aluminum Sheet: ASTM B 209 (ASTM B 209M), alloy 3003 or 5005 with temper as required for forming, or as otherwise recommended by metal producer for required finish.

C. Aluminum Castings: ASTM B 26/B 26M, alloy 319.

D. Stainless-Steel Sheet: ASTM A 666, Type 302 or 304.

E. Fasteners: Of same basic metal and alloy as fastened metal or 300 series stainless steel, unless otherwise indicated. Do not use metals that are incompatible with joined materials.
   1. Use types and sizes to suit unit installation conditions.
   2. Use Phillips flat-head screws for exposed fasteners, unless otherwise indicated.

F. Anchors and Inserts: Of type, size, and material required for loading and installation indicated. Use nonferrous metal or hot-dip galvanized anchors and inserts for exterior installations and elsewhere as needed for corrosion resistance. Use toothed steel or expansion bolt devices for drilled-in-place anchors.

G. Bituminous Paint: Cold-applied asphalt mastic complying with SSPC-Paint 12 but containing no asbestos fibers, or cold-applied asphalt emulsion complying with ASTM D 1187.

2.3 FABRICATION, GENERAL

A. Assemble sun control assemblies in factory to minimize field splicing and assembly. Disassemble units as necessary for shipping and handling limitations. Clearly mark units for reassembly and coordinated installation.

B. Sun control assemblies shall be assembled entirely by mechanical fasteners or welding. Components shall be joined with a minimum of two fillet welds each one-inch (25.4 mm) long produced with the Pulsed Gas Metal Arc Welding (GMAW/MIG) process with minimum 0.125” (3.18 mm) throat.

C. Maintain equal sun control blade spacing, including separation between blades and frames to produce uniform appearance.

D. Include supports, anchorages, and accessories required for complete assembly.

E. Join frame members to one another and to fixed sun control blades with mechanical joints concealed from view, unless size of sun control assembly makes concealed, bolted connections between frame members necessary.

2.4 INCLINED FIXED, EXTRUDED-ALUMINUM SUN CONTROLS

A. Inclined, fixed, extruded-aluminum sun control assemblies complying with the following:
   1. Blade: “Z’ Blade louver as shown in drawings.
   2. Frame: 6” x 2” extruded aluminum tube assembly as shown in drawing

2.5 FINISHES, GENERAL

A. Comply with NAAMM's "Metal Finishes Manual for Architectural and Metal Products" for recommendations for applying and designating finishes.

B. Finish sun controls after assembly.

2.6 ALUMINUM FINISHES

1. Clear Anodized: AA-M-10C-22A-31, Architectural Class II, comply with AAMA 607.1.

PART 3 - EXECUTION

3.1 PREPARATION

A. Coordinate Installation Drawings, diagrams, templates, instructions, and directions for anchorages that are to be embedded in concrete or masonry construction. Coordinate delivery of such items to Project site.

3.2 INSTALLATION

A. Locate and place sun control assemblies level, plumb, and at indicated alignment with adjacent work.

B. Use concealed anchorages where possible. Provide stainless steel/neoprene washers fitted to screws where required to protect metal surfaces and to make a weather tight connection.

C. Form closely fitted joints with exposed connections accurately located and secured.

D. Repair finishes damaged by cutting, welding, soldering, and grinding. Restore finishes so no evidence remains of corrective work. Return items that cannot be refinished in the field to the factory, make required alterations, and refinish entire unit or provide new units

E. Keep aluminum surfaces from direct contact with ferrous metal or other incompatible materials by applying one coat of clear acrylic coating.

3.3 CLEANING AND PROTECTING

A. Clean exposed surfaces of sun control devices that are not protected by temporary covering to remove fingerprints and soil during construction period.

B. Clean exposed surfaces with water and a mild soap or detergent not harmful to finishes. Thoroughly rinse surfaces and dry.

C. Protect sun control assemblies from damage during construction. Use temporary protective coverings where needed and approved by the sun control manufacturer.

D. Clean and touch up minor abrasions in finishes with air-dried coating that matches color and gloss of, and is compatible with, factory-applied finish coating.

END OF SECTION

SECTION 12 48 50

ENTRANCE FLOOR MATS

SECTION ADDED IN ADDENDUM 2

PART 1 GENERAL

1.1 SECTION INCLUDES

A. Entrance Floor Mats

1.2 RELATED SECTIONS

A. Section 03300 - Cast-In-Place Concrete.

B. Section 06100 - Rough Carpentry.

1.3 REFERENCES

A. ASTM D 256 - Standard Test Method for Determining the Pendulum Impact Resistance of Notched Specimens of Plastics.

B. ASTM D 635 - Standard Test Method for Rate of Burning and/or Extent and Time of Burning of Self-Supporting Plastics in a Horizontal Position.

C. ASTM D 638 - Standard Test Method for Tensile Properties of Plastics.

D. ASTM D 648 - Standard Test Method for Deflection Temperature of Plastics Under Flexural Load.

E. ASTM D 696 - Standard Test Method for Coefficient of Linear Thermal Expansion of Plastics Between -30 degrees C and 30 degrees C.

F. ASTM D 785 - Standard Test Method for Rockwell Hardness of Plastics and Electrical Insulating Materials.

G. ASTM D 790 - Standard Test Methods for Flexural Properties of Unreinforced and Reinforced Plastics and Electrical Insulating Materials.

H. ASTM D 792 - Standard Test Methods for Density and Specific Gravity (Relative Density) of Plastics by Displacement.

I. ASTM D 1784 - Standard Specification for Rigid Poly (Vinyl Chloride) (PVC) Compounds and Chlorinated Poly (Vinyl Chloride) (CPVC) Compounds.

J. ASTM D 1822 - Standard Test Method for Tensile-Impact Energy to Break Plastic and Electrical Insulating Materials.

K. ASTM D 2240 - Standard Test Method for Rubber Property--Durometer Hardness.

L. ASTM D 3884 - Standard Test Method for Abrasion Resistance of Textile Fabrics (Rotary Platform, Double-Head Method).

M. ASTM E 648 - Standard Test Method for Critical Radiant Flux of Floor-Covering Systems Using a Radiant Heat Energy Source.

N. NFPA 253 - Standard Method of Test for Critical Radiant Flux of Floor Covering Systems Using a Radiant Heat Energy Source.

O. UL 94V - Tests for Flammability of Plastic Materials for Parts in Devices and Appliances; Underwriters Laboratories Inc.

1.4 SUBMITTALS

A. Submit under provisions of Section 01300.

B. Product Data: Manufacturer's product literature for products specified in this section.

C. Shop Drawings: Indicate locations and dimension of recessed areas to receive products specified in this section.

D. Selection Samples: For each specified product requiring color or finish selection, two sets of samples representing manufacturer's full range of available selections.

E. Verification Samples: For each color or finish selected, two sets of samples indicating match to selected color or finish.

F. Quality Assurance Submittals:
1. Test Reports: Certified reports from independent testing laboratory supporting compliance of products to specified flammability requirements.
2. Manufacturer's Instructions:
   a. Printed installation instructions for each specified product.
   b. Manufacturer's Safety Data Sheets (M.S.D.S.) for each adhesive.

G. Closeout Submittals: Manufacturer's recommendations for cleaning and maintaining products specified in this section.

1.5 QUALITY ASSURANCE

A. Qualifications:
1. Manufacturer: Minimum five (5) years documented experience producing products specified in this section.
2. Installer: Minimum five (5) years documented experience installing products specified in this section, and approved by product manufacturer.

1.6 DELIVERY, STORAGE, AND HANDLING

A. Storage and Protection:
1. Store products of this section in manufacturer's unopened packaging until installation.
2. Maintain dry, heated storage area for products of this section until installation of products.
3. Do not store outside.

1.7 PROJECT/SITE CONDITIONS

A. Field Measurements: Obtain field measurements of recessed areas to receive products of this section prior to order placement; include information on squareness and levelness of recess.

PART 2 PRODUCTS

2.1 MANUFACTURERS

A. Basis of Design Product: AL-TRACK 650 by Amarco Products., PO Box 4085, 5 Powder Horn Drive, Warren, NJ, 07059; telephone 866-688-MATS (866-688-6287) or 732-302-1122; fax 1-877-MAT-ORDERS (877-628-6733) or 732-302-1120 ; www.amarcoproducts.com

B. Equivalent products by following manufacturers are acceptable:
1. Babcock-Davis, Inc.
2. Balco, Inc.
3. Construction Specialties, Inc.

C. Substitutions: Not permitted.

D. Supply all products specified in this section from a single manufacturer.

2.2 MATERIALS

A. Aluminum Metal: Alloy 6063-T6 conforming to ASTM B 221 and FS QQ-AA-200/9C.

B. Aluminum Metal: Alloy 6105-T5 conforming to ASTM B 221.

C. Aluminum Metal: Alloy 6063-T5 conforming to ASTM B 221.

D. Rigid Polyvinyl Chloride (PVC): Having the following physical characteristics:
1. Cell classification, in accordance with ASTM D 1784: 16354.
2. Specific gravity, when tested in accordance with ASTM D 792: 1.33.
3. Tensile strength, when tested in accordance with ASTM D 638: 6,500 pounds per square inch.
4. Modulus of elasticity, when tested in accordance with ASTM D 638: 400,000 pounds per square inch, average.
5. Tensile impact, when tested in accordance with ASTM D 1822: 75 foot-pounds per square inch.
6. Flexural strength, when tested in accordance with ASTM D 790: 12,500 pounds per square inch.
7. Flexural modulus, when tested in accordance with ASTM D 790: 400,000 pounds per square inch.
8. Izod impact, 1/8 inch, when tested in accordance with ASTM D 256: Minimum 20.
9. Izod impact, 1/4 inch, when tested in accordance with ASTM D 256: Minimum 15.
10. Hardness, Shore D, when tested in accordance with ASTM D 2240: 79.
11. Hardness, Rockwell R, when tested in accordance with ASTM D 785: 108.
12. Deflection temperature, when tested in accordance with ASTM D 648: 162 degrees F.
13. Coefficient of thermal expansion, when tested in accordance with ASTM D 696: 0.00004 inch per inch per degree F.
14. Flammability, when tested in accordance with UL 94V: 0.

E. Nylon Carpeting:
1. Tufted cut pile 5/32 inch high, polyamide nylon 80 Dtex tetralobal fibers, 35 ounces per square yard weight, with 100 mil vinyl back coating.
2. Carpet fiber weight loss maximum 1.3 percent when wear-tested in accordance with Taber Abraser method, ASTM D 3884, for 3000 cycles with H-10 wheel and 1000 gram weight.
3. Flammability: Critical radiant flux 1.00 watts per square centimeter when tested in accordance with ASTM E 648 and NFPA 253 Radiant Panel Test; Class 1 rating.

F. Carpeting Adhesive: Non-flammable, and containing no toxic solvents; type recommended by manufacturer of products specified in this section.

2.3 ROLL-UP MATS

A. Roll-up Mats: **AL-TRACK 650 Model AT-650**.
1. Rails: Aluminum, extruded profile, assembled at 1-7/8 inches on center.
2. Hinges: Extruded vinyl, perforated continuous hinge and support cushion, positively secured between aluminum rails; slotted perforations for drainage.
3. Tread inserts: Maxi-Tuft Long Wear nylon carpet (MLW); inserts 1 inch wide, spaced 1-1/2 inches on center; tufted, 5/32 inch pile, 100 percent polyamide nylon fibers with 100 mil vinyl backing; 35 oz/sq yd pile weight with 80 Dtex tetralobal fiber design, tufted at 78,000 fibers per square meter; minimum static coefficient of friction, 0.49 dry, 0.77 wet; treads positively secured into rails.
4. Overall depth: 5/8 inch.
5. Colors: Selected from full range of manufacturer's standard colors.

B. Mat Edging: Manufacturer's standard vinyl edging as follows:
1. Profile: Square.
2. Color: Selected from full range of manufacturer's standard colors.

C. Mat Frame:
1. Material: Aluminum extrusion.
2. Style: For recessed installation.
3. Finish: Selected from full range of manufacturer's standard colors.

PART 3 EXECUTION

3.1 PREPARATION

A. Verification of Conditions: Recesses to receive products of this section are correct size, are within square tolerances and level tolerances.

B. Surface Preparation: Remove debris from recesses to receive frames; sweep recesses clean.

3.2 INSTALLATION

A. Install specified products in accordance with shop drawings and manufacturer's printed installation instructions.

END OF SECTION

CONFORMED

SECTION 12 51 16

MODULAR OFFICE FURNITURE

PART 1 GENERAL

1.1 SECTION INCLUDES

A. Work Surfaces.

B. Legs and Uprights.

C. Panels.

D. Overhead Storage.

E. Accessories.

1.2 ALLOWANCES

A. Include under provisions of Section 01 20 00 - Price and Payment Procedures.

B. Allowance includes purchase and delivery of console systems. Installation is included in this section and is part of Contract Sum/Price.

C. Allowance includes purchase, delivery, and installation of console systems.

1.3 RELATED SECTIONS

A. Division 01 – General Conditions

1.4 REFERENCES

A. ASTM E 84 - Standard Test Method for Surface Burning Characteristics of Building Materials

B. ANSI/HFES 100-2007, Human Factors Engineering of Computer Workstations.

C. ANSI/BIFMA - American National Standard For Office Furnishings.

D. ANSI A208.1 - Particleboard Standard.

E. ANSI/BIFMA X5.5 - American National Standard For Office Furnishings-Desk Products

F. NEMA LD 3 - High Pressure Decorative Laminates.

G. ADA Accessibility Guidelines for Buildings and Facilities.

H. California Technical Bulletin 117 - Requirements, Test Procedure and Apparatus for Testing the Flame Retardance of Resilient Filling Materials Used in Upholstered Furniture

1.5 SUBMITTALS

A. Submit under provisions of Section 01 30 00 - Administrative Requirements.

B. Product Data: Manufacturer's data sheets on each product to be used, including:
   1. Preparation instructions and recommendations.

2. Storage and handling requirements and recommendations.
3. Installation methods.

C. Shop Drawings: Indicate casework locations, large scale plans, elevations, cross sections, rough-in and anchor placement dimensions and tolerances, clearances required. Show component dimensions, configurations, construction details, joint details, and attachments, utility and service requirements and locations.

D. Selection Samples: For each finish product specified, two complete sets of color chips representing manufacturer's full range of available colors and patterns.

E. Verification Samples: For each finish product specified, two samples, minimum size 6 inches (150 mm) square, representing actual product, color, and patterns.

F. Manufacturer's Certificates: Certify products meet or exceed specified requirements.

1.6 QUALITY ASSURANCE

A. Manufacturer Qualifications: Company specializing in manufacturing products specified in this section with minimum five years documented experience.

B. Installer Qualifications: Company specializing in performing Work of this section with minimum three years documented experience and approved by manufacturer.

1.7 PRE-INSTALLATION MEETINGS

A. Convene minimum two weeks prior to commencing work of this section.

1.8 DELIVERY, STORAGE, AND HANDLING

A. Store products in manufacturer's unopened packaging until ready for installation.

B. Accept console components on site. Inspect on arrival for damage.

C. Store products clear of floor in manner to prevent damage.

D. Store and dispose of solvent-based materials, and materials used with solvent-based materials, in accordance with requirements of local authorities having jurisdiction.

1.9 SEQUENCING AND COORDINATION

A. Ensure that products of this section are supplied to affected trades in time to prevent interruption of construction progress.

B. Coordinate casework installation with size, location and installation of service utilities.

1.10 PROJECT CONDITIONS

A. Maintain environmental conditions (temperature, humidity, and ventilation) within limits recommended by manufacturer for optimum results. Do not install products under environmental conditions outside manufacturer's absolute limits.

1.11 WARRANTY

A. Lifetime warranty for manufacturer manufactured products to the original owner.

PART 2 PRODUCTS

2.1 MANUFACTURERS

A. Basis of Design: Eaton, which is located at: 160 Gold Star Blvd.; Worcester, MA 01606; Toll Free Tel: 800-225-7348; Tel: 508-852-4300; Fax: 508-365-6178; Email:request info (InfoESWorcesterMA@Eaton.com); Web:www.wrightline.com

B. Acceptable Manufacturers:
   1. KI
   2. Haworth
   3. Steelcase

C. Requests for substitutions will be considered in accordance with provisions of Division 01

2.2 APPLICATIONS/SCOPE

A. Applications Type: Modular desk and workstation system: Modular, freestanding, steel based scalable and reconfigurable workstation system.
   1. Open Office Systems.
   2. Private Office Systems.

B. Design Elements:
   1. Work Surface:
      a. Linear work surface.
      b. Corner work surface.
      c. Peninsula work surface.
   2. Legs and Uprights:
      a. Standard and corner legs as required for complete assembly
   3. Panels:
      a. Modesty panel.
   4. Overhead Storage:
      a. Overhead compartment shell.
      b. Flipper doors.
      c. Linear storage shelf.
   5. Accessories:
      a. Keyboard Trays.
      b. Storage.
      c. Undercounter lockable file cabinets and drawers
      d. Undercounter shelving

2.3 MODULAR DESK AND WORKSTATION SYSTEM

A. General:
   1. Arrangements shall be comprised of basic components that can be seamlessly combined to create an unlimited array of workspaces.
   2. Workspaces shall meet ADA guidelines and requirements.

B. Configuration:
   1. See Drawings for workspace configuration.

C. Work Surfaces:
   1. Materials:
      a. Wood Core: Constructed of 45 Lb/Ft^{3}particleboard that meets or exceeds ANSI A208.1-99/Grade M-2.
         1) Finish: Decorative laminate on top and equivalent backer sheet on the underside.
            a) Edge: Full T-mold with 0.6 inch radius leading edge and a 0.1 inch (2.54 mm) thick vinyl extrusion secondary flat edge banding.
   2. Corner work surfaces:
      a. General:

1) Corner work surfaces shall attach between a corner leg and two legs supported by two stretchers. Corner work surfaces can be used to create a standalone desk or connect flanking work surfaces of the same depth.

b. Sizes:

1) Corner work surfaces shall be available in left hand widths and right hand widths of 24 to 72 inches (610 to 1829 mm) in 6 inch (152 mm) increments. Widths can be different. Corner work surfaces have symmetrical left and right hand depths of 18, 24, or 30 inches (457, 610, or 762 mm).

2) Maximum corner work surface width shall be 48 by 72 inches (1219 by 1829 mm) or 72 by 48 inches (1829 by 1219 mm).

D. Legs and uprights:

1. Standard leg:

a. General:

1) Standard legs shall attach to the ends of a stretcher and to the bottom of a work surface. Standard legs are available in left and right versions.

b. Sizes:

1) Standard legs are available in heights of 29 and 65 inches (737 and 1651 mm) and modular depths of 18, 24, 30 or 36 inches (457, 610, 762 or 913 mm). Both 29 and 65 inch (737 and 1651 mm) legs support Work Surfaces at 29 inches (737 mm).

2) Legs of 29 inches (737 mm) in height support organizer uprights of 12, 16, 20 and 36 inches (305, 406, 508 and 913 mm). Legs of 65 inches (1651 mm) in height can be considered a 29 inch (737 mm) with an integrated 36 inch (913 mm) upright. .

2. Corner leg:

a. General:

1) A corner leg must be used as the rear center leg of any corner work surface. A corner leg is wider than standard leg, and requires corner-specific work surfaces, organizer panels, shelves, overhead compartments, and doors. These legs shall include a cable pass-through cutout at the stretcher level.

b. Sizes:

1) Corner legs are available in heights of 29 and 65 inches (737 and 1651 mm) and support all work surface depths. Both 29 and 65 inch (737 and 1651 mm) legs support work surfaces at 29 inches (737 mm).

2) Legs of 29 inches (737 mm) in height support organizer uprights of 12, 16, 20 and 36 inches (305, 406, 508 and 913 mm). Legs of 65 inches (1651 mm) in height can be considered a 29 inch (737 mm) with an integrated 36 inch (913 mm) upright.

3. Organizer upright:

a. General:

1) Organizer uprights insert into the tops of 29 inch (737 mm) legs to support organizer panels, linear and corner storage shelves, overhead compartments, and transaction shelves.

b. Sizes:

1) Organizer uprights shall be delivered in pairs, and are available in modular heights of 12, 16, 20 and 36 inches (305, 406, 508 and 913 mm). The modular height is in addition to the 29 inch (737 mm) height of the leg, and does not include the part of the upright that inserts into the leg.

E. Panels:

1. Organizer panel:

a. General:

1) Organizer panels shall attach between uprights, and extend to the top of uprights or to the bottom of overhead compartments. Organizer panels shall come with an insert available in a variety of materials and finishes.

b. Sizes:

1) Organizer panels are available in widths from 24 to 72 inches (610 to 1829 mm) in 6 inch (152 mm), and heights of 12, 16, and 20 inches (305, 406 and 508 mm).

c. Option:

1) Provide a steel J-hook shaped into the top edge for hanging organizers.
2) Laminate insert.
3) Fabric insert.

2. Modesty panel:

a. General:

1) Modesty panels shall connect between legs and below the stretcher, extending to the bottom of legs to provide privacy. Modesty panels shall be constructed of steel and match the appearance of full legs.

b. Sizes:

1) Modesty panels are available in widths from 24 to 72 inches (610 to 1829 mm) in 6 inch (152 mm), and a height of 19-1/2 inches (495 mm).

F. Overhead storage:

1. Overhead compartment shell:

a. General:

1) Overhead Compartment shells shall attach to the uppermost section of 36 inch (914 mm) uprights or 65 inch (1651 mm) inch legs. Overhead compartment shells shall include back, top, bottom, and side panels. Bottom panels shall be slotted to support optional dividers.

b. Size:

1) 16 inches deep x 16 inches high x length as shown on drawings. Provide a center partition in compartment shells of 60 to 72 inches.

c. Options:

1) Flipper doors.

G. Doors:

1. Flipper doors:

a. General:

1) Flipper doors shall attach to the front of an overhead compartment shell. Flipper doors open outward and slide over the top of the compartment shell to stay in the open position. Flipper doors shall include locks and all required mounting hardware.

2. Linear storage shelf:

a. General:

1) Linear storage shelves shall attach between 36 inch (914 mm) uprights or 65 inch (1652 mm) legs, 20 inches (508 mm) above the work surface. Linear shelves shall use two end supports brackets to connect to uprights.

b. Size:

1) Linear storage shelves – 12” deep

3. Corner storage shelf:

a. General:

1) Corner storage shelves shall attach between 36 inch (914 mm) uprights or 65 inch (1652 mm) legs, 20 inches (508 mm) above the work surface. Corner storage shelves shall use two end supports brackets and one corner support bracket to connect to uprights.

b. Size:

1) Corner storage shelves have a depth of 12 inches.

4. Finish Trim Pieces:
   a. Wire Way Covers:
      1) Provide wire way covers that attach to the open channel on the interior side of legs and uprights. Wire way covers to have left and right versions. The flared side of the wire way cover shall align to the rear of the assembly. Wire way covers shall have cutouts that can be removed to accommodate cabling.
      2) Legs of 26 inch (660 mm) in height to have two wire way covers located 19-1/2 inches (495 mm) on the bottom and 6 inches (152 mm) just below the work surface.
      3) Legs of 65 inches (1651 mm) in height to have four wire way covers located 19-1/2 inches (495 mm) on the bottom and 6 inches (152 mm) just below the work surface, 21-1/4 inches (540 mm) just above the work surface, and 14-3/4 inches (375 mm) at the top.
      4) Uprights of 36 inches (914 mm) to have two wire way covers located at 21-1/4 inches (540 mm) above the work surface and 14-3/4 inches (375 mm) at the top.
      5) Uprights of 12, 16, and 20 inches (305, 406, and 508 mm) to have one wire way cover each.
   b. Top Caps:
      1) Provide top caps that insert into the very top of legs and uprights. Top caps to have left and right versions that match the shape of the wire way covers.

H. Accessories:
1. Lighting:
2. Keyboard trays:
   a. Under work surface roll out keyboard shelf
3. Storage:
   a. Utility drawer.
   b. Movable pedestal.
   c. File Cabinet
4. Other:
   a. Under countertop shelving

2.4 MATERIALS

A. Steel:
1. General:
   a. Fully welded design using 14 gauge and 16 gauge, cold rolled steel.
2. Finish:
   a. Uniform application of epoxy powder coated paint.
3. Colors:
   a. To be selected from manufacturers standard color selections.
   b. Nugrey (P).

B. Extruded Aluminum:
1. Slatwall 6063-T6 extruded aluminum, fully anodized, black in color.

C. Fabrics:
1. General:
   a. Fabrics to meet or exceed ASTM E-84, Class 1 or A flammability rating and state of California Technical Bulletin 117 SEC. E (CS=191-53).
2. Colors:
   a. To be selected from manufacturers standard color selections.

D. Decorative Laminates:
   1. General: Meet or exceed performance standards per ANSI/NEMA publication LD3-2005 and comply with U.S. Federal specification L-P 508H and National Sanitation Foundation Number 35 Specification.
   2. Colors:
      a. To be selected from manufacturers standard color selections.

E. Wood Veneer:
   1. Species:
      a. To be selected from manufacturers standard selections.

F. Phenolic Resin:
   1. General: Synthetic surface of chemical resistant phenolic resin.
   2. Colors:
      a. To be selected from manufacturers standard color selections.

2.5 FABRICATI0N

A. Fabricate casework, assembled and welded.

B. Fabricate corners and joints without gaps or inaccessible spaces or areas where dirt or moisture could accumulate.

C. Fabricate components, drawers, doors, shelves, [counters, and similar elements of die formed sheet steel. Form each unit rigid, not dependent on building structure or adjacent units for rigidity.

D. Form edges and seams smooth. Form material for counter tops, facing, shelves, and similar elements from continuous sheets.

E. Cut and drill counter tops, backs, and other components for service fittings and outlets.

F. Install fixtures and fittings built into or part of casework. Provide access panels for maintenance of utility service and mechanical and electrical components.

PART 3 EXECUTION

3.1 EXAMINATION

A. Do not begin installation until substrates have been properly prepared.

B. Verify adequacy of supports, framing and anchors.

C. If substrate preparation is the responsibility of another installer, notify Architect of unsatisfactory preparation before proceeding.

3.2 PREPARATION

A. Clean surfaces thoroughly prior to installation.

B. Prepare surfaces using the methods recommended by the manufacturer for achieving the best result for the substrate under the project conditions.

3.3 INSTALLATION

A. Install module, components and accessories in accordance with manufacturer's instructions.

B. Use anchoring devices to suit conditions and substrate materials encountered.

C. Set casework items plumb and square, securely anchored to building structure.

D. Insulate as required to prevent electrolysis between dissimilar metals.

E. Scribe to abutting surfaces and align adjoining components. Apply matching filler pieces where casework abuts dissimilar construction.

F. Close ends of units, aprons, shelves and bases.

3.4 ADJUSTING

A. Adjust doors, drawers, hardware, fixtures, and other moving or operating parts to function smoothly.

3.5 CLEANING

A. Remove protective covering from finished surfaces.

B. Wash and clean equipment.

C. Polish glass, plastic, hardware, accessories, fixtures, and fittings.

3.6 PROTECTION

A. Protect installed products until completion of project.

B. Touch-up, repair or replace damaged products before Substantial Completion.

END OF SECTION

CONFORMED

SECTION 12 93 13

BICYCLE RACKS AND LOCKERS

PART 1 PRODUCTS

1.1 SECTION INCLUDES

A. Bicycle Lockers:
   1. Single bicycle capacity locker. (BV-1)

1.2 RELATED SECTIONS

A. Section 03 30 00 - Cast-in-Place Concrete.

B. Section 05 50 00 - Metal Fabrications.

C. Section 07 91 26 - Joint Fillers.

1.3 REFERENCES

A. American International (ASTM):
   1. ASTM A 53 - Standard Specification for Pipe, Steel, Black and Hot-Dipped, Zinc-Coated, Welded and Seamless.
   2. ASTM A 123 - Standard Specification for Zinc (Hot-Dip Galvanized) Coatings on Iron and Steel Products.
   3. ASTM A 312 - Standard Specification for Seamless, Welded, and Heavily Cold Worked Austenitic Stainless Steel Pipes.
   4. ASTM A 314 - Standard Specification for Stainless Steel Billets and Bars for Forging.

1.4 SUBMITTALS

A. Submit under provisions of Section 01 30 00 - Administrative Requirements.

B. Product Data: Manufacturer's data sheets on each product to be used, including full range of standard color selections.

C. Shop Drawings: Indicate materials, dimensions, tolerances, welding, fasteners, hardware, mounting, finish, and accessories.

D. Quality Assurance Submittals:
   1. Qualifications: Proof of manufacturer qualifications.
   2. Manufacturer's Installation Instructions.

E. Selection Samples: Color charts illustrating full range of colors and patterns.

F. Verification Samples: Sample of actual color chip selected.

1.5 QUALITY ASSURANCE

A. Manufacturer Qualifications: Minimum five years experience in producing bicycle racks/lockers of the types specified.

1.6 DELIVERY, STORAGE, AND HANDLING

A. Deliver all materials in their original sealed containers bearing manufacturer's name and

identification of product.

B. Do not store products in location with conditions outside manufacturer's absolute limits.

C. Materials delivered to the site shall be examined for concealed damage or defects in shipping. Defects shall be noted and reported to the Owner's Representative in writing.

1.7 PROJECT CONDITIONS

A. Maintain environmental conditions (temperature, humidity, and ventilation) within limits recommended by manufacturer for optimum results. Do not install products under environmental conditions outside manufacturer's absolute limits.

1.8 WARRANTY

A. Warranty: Manufacturer's standard warranty.
1. Seller warranties to replace, or at seller's option, repair any product or part thereof which is found to be defective in material or workmanship for a period of one year from date buyer accepts products. All parts and labor required under warranty provisions shall be supplied free of charge.
2. Transportation costs of returning the products to and from repair facility or costs involved with contractor personnel traveling to buyer's facility for the purpose of repairing products on site shall be borne by seller during 1 year warranty period.

PART 2 PRODUCTS

2.1 MANUFACTURERS

A. Design Basis Manufacturer: Huntco Site Furnishings, which is located at: P. O. Box 10385; Portland, OR 97296; Toll Free Tel: 800-547-5909; Tel: 503-224-8700; Fax: 503-274-2055; Email:request info (sales@huntco.com); Web:www.huntco.com

B. Equivalent products by following manufacturers are acceptable:
1. Columbia Cascade Co.
2. Madrax

C. No substitutions

2.2 BIKE LOCKERS

A. Bike Lockers:
1. Model: As indicated on Drawings.
2. Model: BV-1 as manufactured by Huntco Site Furnishings.
a. Capacity: 1 bicycle.
b. Hinges: Stainless steel piano style hinges.
c. Materials: Stainless steel, # satin finish.
d. Materials: Steel.
1) Finishes: As selected by Architect.
2) Finishes: As indicated on Drawings.
3) Finishes: Double coating of Tiger Drylac triglycidyl isocyanurate (TGIC) polyester powder coatings, 6-8 mils thick.
a) Colors: Black.
b) Colors: Provide manufacturer's standard range for final color slection.
e. Construction: No exposed fasteners.
1) Door Frames: 14 gauge.
2) Doors: 14 gauge sidewall panels.
3) Sidewall Panels: 16 gauge sidewall panels.

4) Roof Panels: 16 gauge sidewall panels.

f. Hardware: Pop out "T" handle with key.

g. Mounting: Surface mount vertically adjusting stainless steel feet for leveling and bolting to concrete.

PART 3 EXECUTION

3.1 EXAMINATION

A. Examine substrates upon which bicycle racks will be installed. Verify that surfaces are clean, flat and level within manufacturer's recommended installation tolerances.

B. If preparation is the responsibility of another installer, notify Architect of deviations from manufacturer's recommended installation tolerances and conditions.

C. Do not proceed with installation until substrates have been properly prepared and deviations are corrected.

D. Commencement of installation constitutes acceptance of conditions.

3.2 INSTALLATION

A. Install bicycle racks/lockers in accordance with manufacturer's installation instructions.

B. Install bicycle racks/lockers level, plumb, square, accurately aligned, correctly located per drawings, and without warp.

C. Mounting: Hardware and fasteners in accordance with manufacturer's instructions

1. For Surface Flange Mounted Bicycle Lockers: Anchor bench securely in place with 1/2 inch x 4-inch anchor bolts through holes in elevator feet.

3.3 CLEANING AND PROTECTION

A. Clean in accordance with manufacturer's recommendations.

B. Protect installed products until completion of project.

C. Touch-up, repair or replace damaged products and finishes in accordance with manufacturer's instructions before Substantial Completion.

END OF SECTION

CONFORMED

SECTION 12 93 00

SITE FURNISHINGS

PART 1 - GENERAL

1.1 RELATED DOCUMENTS

A. Drawings and general provisions of the Contract, including General and Supplementary Conditions and Division 01 Specification Sections, apply to this Section.

1.2 SUMMARY

A. Section Includes:

1. Seating.
2. Bicycle racks.
3. Trash receptacles.
4. Planters.
5. Bollards.

B. Related Requirements:

1. Section 033000 "Cast-in-Place Concrete" for installing anchor bolts cast in concrete footings.
2. Section 312000 "Earth Moving" for excavation for installing concrete footings.

1.3 ACTION SUBMITTALS

A. Product Data: For each type of product.

B. Samples: For each exposed product and for each color and texture specified.

C. Samples for Initial Selection: For units with factory-applied finishes.

1.4 INFORMATIONAL SUBMITTALS

A. Material Certificates: For site furnishings.

1.5 CLOSEOUT SUBMITTALS

A. Maintenance Data: For site furnishings to include in maintenance manuals.

PART 2 - PRODUCTS

2.1 SEATING

A. Seat:

1. Material:

a. Structural Concrete per man. specifcations.

2. Seat Height: As indicated.
3. Seat Surface Shape: Flat.
4. Overall Height: As indicated.
5. Overall Width: As indicated.
6. Overall Depth: As indicated.

2.2 BICYCLE RACKS

A. Bicycle Rack Construction:

1. Frame: Steel .

a. Pipe OD: Not less than that shown on drawings.

2. Style: As indicated.

a. Overall Height: As indicated.
b. Overall Width: As indicated.
c. Overall Depth: As indicated.
d. Capacity: As indicated.

3. Installation Method: As indicated.

B. Steel Finish: Color coated.

1. Color: As indicated in a site furnishing schedule.

2.3 TRASH RECEPTACLES

A. Pre-Molded Concrete

B. Trash Receptacles:

1. Receptacle Shape and Form: As indicated

2. Receptacle Height: As indicated.
3. Overall Width: As indicated.

2.4 BOLLARDS <**Insert drawing designation**>

A. <Double click here to find, evaluate, and insert list of manufacturers and products.>

B. Bollard Construction:

1. Pipe OD: as indicated.

a. Steel: Schedule 40 pipe.
2. Style: As indicated.
3. Overall Height: As indicated.
4. Overall Width: As indicated.
5. Overall Depth: As indicated.
6. Installation Method: As indicated.

C. Steel Finish: Color coated.

1. Color: As indicated in a site furnishing schedule.

2.5 MATERIALS

A. Steel and Iron: Free of surface blemishes and complying with the following:

1. Plates, Shapes, and Bars: ASTM A 36/A 36M.
2. Steel Pipe: Standard-weight steel pipe complying with ASTM A 53/A 53M, or electric-resistance-welded pipe complying with ASTM A 135/A 135M.
3. Tubing: Cold-formed steel tubing complying with ASTM A 500/A 500M.

B. Anchors, Fasteners, Fittings, and Hardware: Stainless steel; commercial quality, tamperproof, vandal and theft resistant , concealed, recessed, and capped or plugged.

C. Nonshrink, Nonmetallic Grout: Premixed, factory-packaged, nonstaining, noncorrosive, nongaseous grout complying with ASTM C 1107/C 1107M; recommended in writing by manufacturer, for exterior applications.

D. Erosion-Resistant Anchoring Cement: Factory-packaged, nonshrink, nonstaining, hydraulic-controlled expansion cement formulation for mixing with potable water at Project site to create pourable anchoring, patching, and grouting compound; resistant to erosion from water exposure without needing protection by a sealer or waterproof coating; recommended in writing by manufacturer, for exterior applications.

2.6 FABRICATION

A. Metal Components: Form to required shapes and sizes with true, consistent curves, lines, and angles. Separate metals from dissimilar materials to prevent electrolytic action.

B. Welded Connections: Weld connections continuously. Weld solid members with full-length, full-penetration welds and hollow members with full-circumference welds. At exposed connections, finish surfaces smooth and blended so no roughness or unevenness shows after finishing and welded surface matches contours of adjoining surfaces.

C. Pipes and Tubes: Form simple and compound curves by bending members in jigs to produce uniform curvature for each repetitive configuration required; maintain cylindrical cross section of member throughout entire bend without buckling, twisting, cracking, or otherwise deforming exposed surfaces of handrail and railing components.

D. Exposed Surfaces: Polished, sanded, or otherwise finished; all surfaces smooth, free of burrs, barbs, splinters, and sharpness; all edges and ends rolled, rounded, or capped.

E. Factory Assembly: Assemble components in the factory to greatest extent possible to minimize field assembly. Clearly mark units for assembly in the field.

2.7 GENERAL FINISH REQUIREMENTS

A. Appearance of Finished Work: Noticeable variations in same piece are not acceptable. Variations in appearance of adjoining components are acceptable if they are within the range of approved Samples and are assembled or installed to minimize contrast.

2.8 STEEL AND GALVANIZED-STEEL FINISHES

A. Baked-Enamel, Powder-Coat Finish: Manufacturer's standard, baked, polyester, powder-coat finish complying with finish manufacturer's written instructions for surface preparation, including pretreatment, application, baking, and minimum dry film thickness.

PART 3 - EXECUTION

3.1 EXAMINATION

A. Examine areas and conditions, with Installer present, for compliance with requirements for correct and level finished grade, mounting surfaces, installation tolerances, and other conditions affecting performance of the Work.

B. Proceed with installation only after unsatisfactory conditions have been corrected.

3.2 INSTALLATION, GENERAL

A. Comply with manufacturer's written installation instructions unless more stringent requirements are indicated. Complete field assembly of site furnishings where required.

B. Unless otherwise indicated, install site furnishings after landscaping and paving have been completed.

C. Install site furnishings level, plumb, true, and securely anchored at locations indicated on Drawings.

D. Post Setting: Set cast-in support posts in concrete footing with smooth top, shaped to shed water. Protect portion of posts above footing from concrete splatter. Verify that posts are set plumb or at correct angle and are aligned and at correct height and

spacing. Hold posts in position during placement and finishing operations until concrete is sufficiently cured.

E. Posts Set into Voids in Concrete: Form or core-drill holes for installing posts in concrete to depth recommended in writing by manufacturer of site furnishings and 3/4 inch (19 mm) larger than OD of post. Clean holes of loose material, insert posts, and fill annular space between post and concrete with nonshrink, nonmetallic grout, mixed and placed to comply with anchoring material manufacturer's written instructions, with top smoothed and shaped to shed water.

F. Pipe Sleeves: Use steel pipe sleeves preset and anchored into concrete for installing posts. After posts have been inserted into sleeves, fill annular space between post and sleeve with nonshrink, nonmetallic grout, mixed and placed to comply with anchoring material manufacturer's written instructions, with top smoothed and shaped to shed water.

END OF SECTION

CONFORMED

SECTION 21 13 13

WET-PIPE SPRINKLER SYSTEMS

PART 1 GENERAL

1.1 SUMMARY

A. Section Includes:

1. Pipes, fittings, and joining methods
2. Fire-protection valves
3. Trim and drain valves
4. Specialty valves
5. Sprinklers
6. Alarm devices

1.2 SYSTEM DESCRIPTIONS

A. Wet-pipe Sprinkler System: Automatic sprinklers are attached to piping containing water and that is connected to water supply. Water discharges immediately from sprinklers when they are opened.

1.3 PERFORMANCE REQUIREMENTS

A. Standard-Pressure Piping System Component: Listed for 175-psig minimum working pressure.

B. Sprinkler systems(s) design shall be approved by authorities having jurisdiction.

1. Margin of safety for available waterflow and pressure shall be 10 percent, including losses through water serving piping, fitting, valves, and backflow preventers.
2. Sprinkler Occupancy Hazard Classifications:
    a. Office and Public Areas: Light Hazard
    b. Utility Areas: Ordinary Hazard, Group 1
    b. Storage Areas: Ordinary Hazard, Group 2
3. Minimum Density for Automatic-Sprinkler Piping Design:
    a. Light Hazard Occupancy: 0.10 GPM per sq. ft.
    b. Ordinary Hazard, Group 1 Occupancy: 0.15 GPM per sq. ft.
    c. Ordinary Hazard, Group 2 Occupancy: 0.20 GPM per sq. ft.
4. Maximum Protection Area per Sprinkler: Per UL Listing
5. Total Combined Hose-Stream Demand Requirement: According to NFPA 13.

C. Seismic Performance: Sprinkler piping shall withstand the effects of earthquake motions determined according to NFPA 13.

1.4 SUBMITTALS

A. Product Data: For each type of product indicated.

B. Shop Drawings: For wet-pipe sprinkler systems. Include plans, elevations, sections, details.

1. Wiring Diagrams: For power, signal, and control wiring

C. Approved Sprinkler Piping Drawings: Working plans, prepared according to NFPA 13, that have been approved by authorities having jurisdiction, including hydraulic calculations.

D. Welding certificates.

E. “Contractor’s Material and Test Certificate for Aboveground Piping.”

F. “Contractor’s Material and Test Certificate for Underground Piping.”

G. Operation and maintenance data.

1.5 QUALITY ASSURANCE

A. Installer Qualifications:

1. Installer's responsibilities include designing, fabricating, and installing sprinkler systems and providing engineering services needed to assume engineering responsibility. Base calculations on results of fire-hydrant flow test conducted within twelve months.

a. Engineering Responsibility: Preparation of working plans, calculations, and field test reports.

B. Welding Qualifications: Qualify procedures and operators according to ASME Boiler and Pressure Vessel Code.

C. Electrical Components, Devices, and Accessories: Listed and labeled as defined in NFPA 70, by a qualified testing agency, and marked for intended location and application.

D. NFPA Standards: Sprinkler system equipment, specialties, accessories, installation, and testing shall comply with the following:

1. NFPA 13, “Installation of Sprinkler Systems.”

2. NFPA 24, Installation of Private Fire Service Mains and Their Appurtenances.”

PART 2 PRODUCTS

2.1 PIPING MATERIALS

A. Comply with requirements in "Piping Schedule" Article for applications of pipe, tube, and fitting materials, and for joining methods for specific services, service locations, and pipe sizes.

2.2 STEEL PIPE AND FITTINGS

A. Standard Weight (schedule 40) and Light Weight (schedule 10), Black-Steel Pipe: ANSI/ASTM A53, Type E, Grade A or B; or ASTM A135; or ASTM A795. Pipe ends may be factory or field-formed to match joining method.

B. Black-Steel Pipe Nipples: ASTM A733, made of ASTM A53/A53M, standard-weight, seamless steel pipe with threaded ends per ANSI 1.20.1 (B2.1).

C. Malleable-Iron Threaded Fittings: ANSI B16.3, made of ASTM A536 malleable iron, with threaded ends per ANSI 1.20.1 (B2.1).

D. Cast-Iron Threaded Fittings: ANSI B16.4, made of ASTM A126 cast iron, with threaded ends per ANSI 1.20.1 (B2.1).

E. Cast-Iron Flanges: ANSI B16.4, made of ASTM A126 cast iron, Class 125.

F. Steel Welding Fittings: ASTM A53, Type E, Grade A or B; or ASTM A135; or ASTM A795.

G. Grooved-Joint, Steel-Pipe Appurtenances:

1. Manufacturers: Subject to compliance with requirements, available manufacturers offering products that may be incorporated into the Work include, but are not limited to, the following:

a. Victaulic Company

b. Tyco Fire Suppression and Building Products

c. Anvil International

2. Pressure Rating: 175 psig minimum.

3. Grooved-End Fittings for Steel Piping: ASTM A 536, ductile-iron casing; with dimensions matching steel pipe.

4. Grooved-End-Pipe Couplings for Steel Piping: Rigid pattern, unless otherwise indicated, for steel-pipe dimensions. ASTM A 536, ductile-iron housing, EPDM-rubber gasket, and bolts and nuts.

2.3 PIPING JOINING MATERIALS

A. Pipe-Flange Gasket Materials: ASME B16.21, nonmetallic and asbestos free.

1. Class 125, Cast-Iron Flat-Face Flanges: Full-face gaskets.

B. Metal, Pipe-Flange Bolts and Nuts: ASME B18.2.1, carbon steel unless otherwise indicated.

C. Welding Filler Metals: Comply with AWS D10.12M/D10.12 for welding materials appropriate for wall thickness and chemical analysis of steel pipe being welded.

2.4 LISTED FIRE-PROTECTION VALVES

A. General Requirements:

1. Valves shall be UL listed.

2. Minimum Pressure Rating: 175 psig.

B. Backflow preventer: Double check type, Ames or equal.

C. Indicating Valves:

1. Body material: Cast or ductile iron.

2. End connections: Flanged or grooved

D. Check Valves: Victaulic, or equal.

1. Type: Swing check.

2. Body material: Cast or ductile iron.

3. End connections: Flanged or grooved.

2.5 TRIM AND DRAIN VALVES

A. Angle, check and globe trim valves for fire sprinkler service: NIBCO, United Brass, or equal.

2.6 SPECIALTY VALVES

2.7 FIRE DEPARTMENT CONNECTIONS

2.8 SPECIALTY FITTINGS

2.9 SPRINKLERS

PRODUCT DATA SHEET 1-S.

A. Sprinkler heads shall glass bulb.

B. Sprinkler heads shall be color coded.

C. Sprinkler heads in areas with exposed piping shall be standard upright or pendant type. Sprinklers in finished ceilings to be chrome with white escutcheons. T-bar ceiling to receive semi-recessed sprinklers. Ceiling with surface mounted lights are allowed to be pendent with 401 style 2 piece escutcheons.

D. Sprinkler heads in corrosive environments (i.e., all chemical rooms) shall have a white coating applied at the factory. Sprinkler heads in all other areas allowed to have a standard finishes.

2.10 ALARM DEVICES

A. Water flow indicator for local alarm: UL approved suitable for variable pressure, complete with instantaneous recycling retard and electrical contacts for alarm system (number as required). Potter Electric Signal, or equal.

PART 3 EXECUTION

3.1 WATER-SUPPLY CONNECTIONS

3.2 PIPING INSTALLATION

A. Locations and Arrangements: Drawing plans, schematics, and diagrams indicate general location and arrangement of piping. Install piping as indicated, as far as practical.

1. Deviations from approved working plans for piping require written approval from authorities having jurisdiction. File written approval with Architect before deviating from approved working plans.

B. Piping Standard: Comply with requirements for installation of sprinkler piping in NFPA 13.

C. Install seismic restraints on piping. Comply with requirements for seismic-restraint device materials and installation in NFPA 13.

D. Use listed fittings to make changes in direction, branch takeoffs from mains, and reductions in pipe sizes.

E. Install unions adjacent to each valve in pipes NPS 2 and smaller.

F. Install flanges, flange adapters, or couplings for grooved-end piping on valves, apparatus, and equipment having NPS 2-1/2 and larger end connections.

G. Install "Inspector's Test Connections" in sprinkler system piping, complete with shutoff valve, and sized and located according to NFPA 13.

H. Install sprinkler piping with drains for complete system drainage.

I. Install sprinkler control valves, test assemblies, and drains.

J. Install alarm devices in piping systems.

K. Install hangers and supports for sprinkler system piping according to NFPA 13. Comply with requirements for hanger materials in NFPA 13.

L. Install pressure gages on riser.

M. Install sleeves for exposed piping penetrations of walls, ceilings, and floors.

N. Install sleeve seals for piping penetrations of concrete walls and slabs.

O. Install escutcheons for piping penetrations of walls, ceilings, and floors.

3.3 JOINT CONSTRUCTION

3.4 VALVE AND SPECIALTIES INSTALLATION

A. Install listed fire-protection valves, trim and drain valves, specialty valves and trim, controls, and specialties according to NFPA 13 and authorities having jurisdiction.

B. Install listed fire-protection shutoff valves supervised open, located to control sources of water supply except from fire-department connections. Install permanent identification signs indicating portion of system controlled by each valve.

C. Install check valve in each water-supply connection. Install backflow preventers instead of check valves in potable-water-supply sources.

3.5 SPRINKLER INSTALLATION

A. Install sprinklers in suspended ceilings in center of acoustical ceiling panels.

3.6 FIELD QUALITY CONTROL

A. Perform tests and inspections.

B. Tests and Inspections:

1. Leak Test: After installation, charge systems and test for leaks. Repair leaks and retest until no leaks exist.

2. Flush, test, and inspect sprinkler systems according to NFPA 13, "Systems Acceptance" Chapter.

3. Coordinate with fire-alarm tests. Operate as required.

C. Sprinkler piping system will be considered defective if it does not pass tests and inspections.

D. Prepare test and inspection reports.

3.7 CLEANING

A. Clean dirt and debris from sprinklers.

B. Remove and replace sprinklers with paint other than factory finish.

END OF SECTION

CONFORMED

SECTION 22 05 00

BASIC MECHANICAL MATERIALS AND METHODS

PART 1GENERAL

1.1 RELATED DOCUMENTS

A. The requirements of the GENERAL CONDITIONS, SUPPLEMENTAL CONDITIONS, and DIVISION 1, GENERAL REQUIREMENTS, apply to the work of this SECTION.

1.2 SUMMARY

A. This Section includes the following basic mechanical materials and methods to complement other DIVISION 22 & 23 sections.

1. Piping materials and installation instructions common to most piping systems.
2. Equipment nameplate data requirements.
3. Non-shrink grout for equipment installations.
4. Installation requirements common to equipment specification Sections.
5. Mechanical demolition.

B. Pipe and pipe fitting materials are specified in piping system Sections.

1.3 DEFINITIONS

A. Pipe, pipe fittings, and piping include tube, tube fittings and tubing.

B. Finished Spaces: Spaces other than mechanical and electrical equipment rooms, furred spaces, pipe and duct shafts, unheated spaces immediately below the roof, spaces above ceiling, un-excavated spaces, crawl spaces, and tunnels

C. Exposed Interior Installations: Exposed to view indoors. Examples include finished occupied spaces and mechanical equipment rooms.

D. Exposed Exterior Installations: Exposed to view outdoors, or subject to outdoor ambient temperatures and weather conditions. Examples include rooftop locations.

E. Concealed Interior Installations: Concealed from view and protected from physical contact by building occupants. Examples include above ceilings and in duct shafts.

F. Concealed Exterior Installations: Concealed from view and protected from weather conditions and physical contact by building occupants, but subject to outdoor ambient temperatures. Examples include installations within unheated shelters.

1.4 SUBMITTALS

A. Product Data: Submit seven (7) copies of the manufacturer’s technical product data and installation instructions for each type of material listed in this SECTION.

B. Maintenance Data: Submit seven (7) copies maintenance data and replacement material lists for each type of material listed in this section. Include this data and product data in maintenance manual.

1.5 QUALITY ASSURANCE

A. Quality welding processes and operators for structural steel according to AWS D1.1 “Structural Welding Code – Steel.”

B. Qualify welding processes and operators for piping according to ASME “Boiler and Pressure Vessel Code,” Section IX, “Welding and Brazing Qualifications.”

1. Comply with provisions of ASME B31 Series “Code for Pressure Piping.”

2. Certify that each welder has passed AWS qualification tests for the welding processes involved and that certification is current.

C. ASME A13.1 for lettering size, length of color field, colors, and viewing angles of identification devices.

1.6 DELIVERY, STORAGE AND HANDLING

A. Deliver pipes and tubes with factory-applied end-caps. Maintain end-caps through shipping, storage, and handling to prevent pipe-end damage and prevent entrance of dirt, debris, and moisture.

B. Protect stored pipes and tubes from moisture and dirt. Elevate above grade. When stored inside, do not exceed structural capacity of the floor.

C. Protect flanges, fittings, and piping specialties from moisture and dirt.

1.7 SEQUENCING AND SCHEDULING

A. Coordinate mechanical equipment installation with other building components.

B. Arrange for chases, slots, and openings in building structure during progress of construction to allow for mechanical installations.

C. Sequence, coordinate, and integrate installations of mechanical materials and equipment for efficient flow of the Work. Coordinate installation of large equipment requiring positioning prior to closing in the building.

D. Coordinate connection of electrical services.

E. Coordinate requirements for access panels and doors where mechanical items requiring access are concealed behind finished surfaces.

F. Coordinate installation of identifying devices after completing covering and painting where devices are applied to surfaces.

PART 2 PRODUCTS

2.1 PIPE AND PIPE FITTINGS

A. Refer to individual piping system specification Sections in Division 15 for special joining materials not listing below.

B. Pipe Threads: ASME B1.20.1 for factory threaded pipe and pipe fittings.

2.2 JOINING MATERIALS

A. Refer to individual piping system specification Sections in Division 15 for special joining materials not listed below.

B. Pipe Flange Gasket Materials: Suitable for the chemical and thermal conditions of the piping system contents.

C. Flange Bolts and Nuts: ASME B18.2.1, carbon steel, except where other material is indicated.

D. Solder Filler Metal: ASTM B32

1. Alloy Sn95 or Alloy Sn94: Tin (approximately 95%) and silver (approximately 5%) having 0.10% maximum lead content.
2. Alloy E: Tin (approximately 95%) and copper (approximately 5%), having 0.10% maximum lead content.
3. Alloy HA: Tin-antimony-silver-copper-zinc, having 0.10% maximum lead content.
4. Alloy HB: Tin-antimony-silver-copper-nickel, having 0.10% maximum lead content.
5. Alloy Sb5: Tin (95%) and antimony (5%), having 0.20% maximum lead content.

E. Brazing Filler Metals: AWS A5.8.

1. BCuP Series: Copper-phosphorus alloys.
2. BAg1 Series: Silver alloy.

F. Welding Filler Metals: Comply with AWS D10.12 for welding materials appropriate for wall thickness and chemical analysis of steel pipe being welded.

G. Flanged, Ductile-Iron Pipe Gasket, Bolts, and Nuts: AWWA C110, rubber gasket, carbon steel bolts and nuts.

H. Couplings: Iron body sleeve assembly, fabricated to match outside diameters of plain-end pressure pipes.

1. Sleeve: ASTM A 126, Class B, gray iron.
2. Followers: ASTM A 47 (ASTM A 47M), Grade 32510 or ASTM A 536 ductile iron.
3. Gaskets: Rubber.
4. Bolts and Nuts: AWWA C111.
5. Finish Enamel paint.

2.3 PIPING SPECIALTIES

A. Escutcheons: Manufactured wall, ceiling, and floor plates; deep-pattern type where required to conceal protruding fittings and sleeves.

B. Dielectric Fittings: Assembly or fitting having insulating material isolating joined dissimilar metals to prevent galvanic action.

1. Description: Combination of copper alloy and ferrous; threaded, solder, plain, and weld neck end types and matching piping system materials.

C. Sleeves: The following materials are for wall, floor, slab, and roof penetrations:

1. Steel Sheet-Metal: 24-gage (0.70mm) or heavier galvanized sheet metal, round tube closed with welded longitudinal joint
2. Steel Pipe: ASTM A 53, Type E, Grade A, Schedule 40, galvanized, plain ends.

2.4 GROUT

A. Non-shrink, Nonmetallic Grout: ASTM C 1107, Grade B.

1. Characteristics: Post-hardening, volume-adjusting, dry, hydraulic-cement grout, non-staining, non-corrosive, nongaseous, and recommended for interior and exterior applications.
2. Design Mix: 5000-psi (34.50mpa), 28-day compressive strength.
3. Packaging: Premixed and factory-packaged.

PART 3 EXECUTION

3.1 PIPING SYSTEMS --COMMON REQUIREMENTS

A. General: Install piping as described below, except where system Sections specify otherwise. Individual piping system specification Sections in Division 23 specify piping installation requirements unique to the piping system.

B. General Locations and Arrangements: Drawings (plans, schematics, and diagrams) indicate general location and arrangement of piping systems. Indicated locations and arrangements were used to size pipe and calculate friction loss, and other design considerations. Install piping as indicated, except where deviations to layout are approved on coordination drawings.

C. Install components having pressure ratings equal to or greater than system operating pressure.

D. Install piping free of sags and bends.

E. Install exposed interior and exterior piping at right angles or parallel to building walls. Diagonal runs are prohibited, except where indicated.

F. Install piping tight to slabs, beams, joists, columns, walls, and other building elements. Allow sufficient space above removable ceiling panels to allow for ceiling panel removal.

G. Install piping to allow application of insulation plus 1-inch (25mm) clearance around insulation.

H. Locate groups of pipes parallel to each other, spaced to permit valve servicing.

I. Install fittings for changes in direction and branch connections.

J. Install couplings according to manufacturer's printed instructions.

K. Install sleeves for pipes passing through concrete and masonry walls, concrete floor and roof slabs, and where indicated.

L. Install sleeves for pipes passing through concrete and masonry walls, gypsum-board partitions, concrete floor and roof slabs, and where indicated.

M. Fire Barrier Penetrations: Maintain indicated fire rating of walls, partitions, ceilings, and floors at pipe penetrations. Seal pipe penetrations with firestopping sealant material using methods approved by the Fire Marshall.

N. Verify final equipment locations for roughing in.

O. Refer to equipment specifications in other Sections for rough-in requirements.

P. Piping Joint Construction: Join pipe and fittings as follows and as specifically required in individual piping system Sections.

1. Ream ends of pipes and tubes and remove burrs. Bevel plain ends of steel pipe.

2. Remove scale, slag, dirt, and debris from inside and outside of pipe and fittings before assembly.

3. Soldered Joints: Construct joints according to AWS "Soldering Manual," Chapter 22 "The Soldering of Pipe and Tube."

4. Brazed Joints: Construct joints according to AWS "Brazing Manual" in the "Pipe and Tube" chapter.

5. Threaded Joints: Thread pipe with tapered pipe threads according to ASME B1.20.1. Cut threads full and clean using sharp dies. Ream threaded pipe ends to remove burrs and restore full inside diameter. Join pipe fittings and valves as follows:

a Note the internal length of threads in fittings or valve ends, and proximity of internal seat or wall, to determine how far pipe should be threaded into joint.

b Apply appropriate tape or thread compound to external pipe threads (except where dry seal threading is specified).

c Align threads at point of assembly.

d Tighten joint with wrench. Apply wrench to valve end into which pipe is being threaded.

e Damaged Threads: Do not use pipe or pipe fittings having threads that are corroded or damaged. Do not use pipe sections that have cracked or open welds.

6. Welded Joints: Construct joints according to AWS D10.12 “Recommended Practices and Procedures for Welding Low Carbon Steel Pipe” using qualified processes and welding operators according to the “Quality Assurance” Article.

7. Flanged Joints: Align flange surfaces parallel. Select appropriate gasket material, size, type, and thickness for service application. Install gasket concentrically positioned. Assemble joints by sequencing bolt tightening to make initial contact of flanges and gaskets as flat and parallel as possible. Use suitable lubricants on bolt threads. Tighten bolts gradually and uniformly using torque wrench.

Q. Piping Connections: Except as otherwise indicated, make piping connections as specified below.

1. Install unions in piping 2 inches and smaller adjacent to each valve and at final connection to each piece of equipment having a 2-inch or smaller threaded pipe connection.

2. Install flanges in piping 2-1/2 inches and larger adjacent to flanged valves and at final connection to each piece of equipment having flanged pipe connection.

3. Dry Piping Systems (Gas, Compressed Air, and Vacuum): Install dielectric unions and flanges to connect piping materials of dissimilar metals.

4. Wet Piping Systems (Water and Steam): Install dielectric coupling and nipple fittings to connect piping materials of dissimilar metals.

3.2 EQUIPMENT INSTALLATION -- COMMON REQUIREMENTS

A. Install equipment to provide the maximum possible headroom where mounting heights are not indicated.

B. Install equipment according to approved submittal data. Portions of the Work are shown only in diagrammatic form. Refer conflicts to the Architect.

C. Install mechanical equipment to facilitate servicing, maintenance, and repair or replacement of equipment components. Connect equipment for ease of disconnecting, with minimum of interference with other installations. Extend grease fittings to an accessible location.

D. Install equipment giving right-of-way to piping systems installed at a required slope.

3.3 PAINTING AND FINISHING

A. Refer to Division 9 Section “Painting” for field painting requirements.

B. Damage and Touch Up: Repair marred and damaged factory-painted finishes with materials and procedures to match original factory finish.

3.4 DEMOLITION

A. Disconnect, demolish, and remove work specified under Division 15 and as indicated.

B. Where pipe, ductwork, insulation, or equipment to remain is damaged or disturbed, remove damaged portions and install new products of equal capacity and quality.

C. Accessible Work: Remove indicated exposed pipe and ductwork in its entirety.

D. Removal: Remove indicated equipment from the Project site.

E. Temporary Disconnection: Remove, store, clean, reinstall, and reconnect equipment indicated for relocation.

3.5 CUTTING AND PATCHING

A. Install nonmetallic nonshrink grout for mechanical equipment base bearing surfaces, pump and other equipment base plates, and anchors. Mix grout according to manufacturer's printed instructions.

B. Clean surfaces that will come into contact with grout.

C. Provide forms for placement of grout, as required.

D. Avoid air entrapment when placing grout.

E. Place grout to completely fill equipment bases.

F. Place grout on concrete bases to provide a smooth bearing surface for equipment.

G. Place grout around anchors.

H. Cure placed grout according to manufacturer's printed instructions.

END OF SECTION

CONFORMED

SECTION 22 1113

FACILITY WATER DISTRIBUTION PIPING

PART 1 GENERAL

1.1 RELATED DOCUMENTS

A. Drawings and general provisions of the Contract, including General and Supplementary Conditions and Division 01 Specification Sections, apply to this Section.

1.2 SUMMARY

A. This Section includes water-distribution piping and related components outside the building for water service and fire-service mains.

B. Utility-furnished products include water meters that will be furnished to the site, ready for installation.

1.3 DEFINITIONS

A. EPDM: Ethylene propylene diene terpolymer rubber.

B. LLDPE: Linear, low-density polyethylene plastic.

C. PA: Polyamide (nylon) plastic.

D. PE: Polyethylene plastic.

E. PP: Polypropylene plastic.

F. PVC: Polyvinyl chloride plastic.

G. RTRF: Reinforced thermosetting resin (fiberglass) fittings.

H. RTRP: Reinforced thermosetting resin (fiberglass) pipe.

1.4 ACTION SUBMITTALS

A. Product Data: For each type of product indicated.

B. Shop Drawings: Detail precast concrete vault assemblies and indicate dimensions, method of field assembly, and components.

1.5 INFORMATIONAL SUBMITTALS

A. Coordination Drawings: For piping and specialties including relation to other services in same area, drawn to scale. Show piping and specialty sizes and valves, meter and specialty locations, and elevations.

B. Field quality-control test reports.

1.6 CLOSEOUT SUBMITTALS

A. Operation and Maintenance Data: For water valves and specialties to include in emergency, operation, and maintenance manuals.

CONFORMED

1.7 QUALITY ASSURANCE

A. Regulatory Requirements:
   1. Comply with requirements of utility company supplying water. Include tapping of water mains and backflow prevention.
   2. Comply with standards of authorities having jurisdiction for potable-water-service piping, including materials, installation, testing, and disinfection.
   3. Comply with standards of authorities having jurisdiction for fire-suppression water-service piping, including materials, hose threads, installation, and testing.

B. Piping materials shall bear label, stamp, or other markings of specified testing agency.

C. Electrical Components, Devices, and Accessories: Listed and labeled as defined in NFPA 70, Article 100, by a testing agency acceptable to authorities having jurisdiction, and marked for intended use.

D. Comply with ASTM F 645 for selection, design, and installation of thermoplastic water piping.

E. Comply with FMG's "Approval Guide" or UL's "Fire Protection Equipment Directory" for fire-service-main products.

F. NFPA Compliance: Comply with NFPA 24 for materials, installations, tests, flushing, and valve and hydrant supervision for fire-service-main piping for fire suppression.

G. NSF Compliance:
   1. Comply with NSF 14 for plastic potable-water-service piping. Include marking "NSF-pw" on piping.
   2. Comply with NSF 61 Annex G for materials for water-service piping and specialties for domestic water.

1.8 DELIVERY, STORAGE, AND HANDLING

A. Preparation for Transport: Prepare valves, including fire hydrants, according to the following:
   1. Ensure that valves are dry and internally protected against rust and corrosion.
   2. Protect valves against damage to threaded ends and flange faces.
   3. Set valves in best position for handling. Set valves closed to prevent rattling.

B. During Storage: Use precautions for valves, including fire hydrants, according to the following:
   1. Do not remove end protectors unless necessary for inspection; then reinstall for storage.
   2. Protect from weather. Store indoors and maintain temperature higher than ambient dew-point temperature. Support off the ground or pavement in watertight enclosures when outdoor storage is necessary.

C. Handling: Use sling to handle valves and fire hydrants if size requires handling by crane or lift. Rig valves to avoid damage to exposed parts. Do not use handwheels or stems as lifting or rigging points.

D. Deliver piping with factory-applied end caps. Maintain end caps through shipping, storage, and handling to prevent pipe-end damage and to prevent entrance of dirt, debris, and moisture.

E. Protect stored piping from moisture and dirt. Elevate above grade. Do not exceed structural capacity of floor when storing inside.

F. Protect flanges, fittings, and specialties from moisture and dirt.

G. Store plastic piping protected from direct sunlight. Support to prevent sagging and bending.

CONFORMED

1.9 PROJECT CONDITIONS

A. Interruption of Existing Water-Distribution Service: Do not interrupt service to facilities occupied by Owner or others unless permitted under the following conditions and then only after arranging to provide temporary water-distribution service according to requirements indicated:
   1. Notify City of Turlock no fewer than two days in advance of proposed interruption of service.
   2. Do not proceed with interruption of water-distribution service without City of Turlock's written permission.

1.10 COORDINATION

A. Coordinate connection to water main with utility company.

PART 2 PRODUCTS

2.1 PVC PIPE AND FITTINGS

A. PVC pipe and fittings shall comply with Section 15 "Water Systems" of the City of Turlock Standard Specifications.

2.2 SPECIAL PIPE FITTINGS

A. Special pipe fittings shall comply with Section 15 "Water Systems" of the City of Turlock Standard Specifications.

2.3 CORROSION-PROTECTION PIPING ENCASEMENT

2.4 GATE VALVES

A. Gate valves shall comply with Section 15 "Water Systems" of the City of Turlock Standard Specifications.

2.5 GATE VALVE ACCESSORIES AND SPECIALTIES

A. Gate valve accessories and specialties shall comply with Section 15 "Water Systems" of the City of Turlock Standard Specifications.

B. Water meters shall comply with Section 15 "Water Systems" of the City of Turlock Standard Specifications.

2.6 BACKFLOW PREVENTERS

A. Backflow preventers shall comply with Section 15 "Water Systems" of the City of Turlock Standard Specifications.

2.7 FIRE HYDRANTS

A. Fire hydrants shall comply with Section 15 "Water Systems" of the City of Turlock Standard Specifications.

2.8 FIRE DEPARTMENT CONNECTIONS

A. Fire department connections shall comply with Section 15 "Water Systems" of the City of Turlock Standard Specifications.

CONFORMED

PART 3 EXECUTION

3.1 EARTHWORK

A. Earthwork shall comply with Section 14 “Trenching and Backfilling” of the City of Turlock Standard Specifications.

3.2 PIPING APPLICATIONS

A. General: Use pipe, fittings, and joining methods for piping systems according to the following applications.

B. Transition couplings and special fittings with pressure ratings at least equal to piping pressure rating may be used, unless otherwise indicated.

C. Do not use flanges or unions for underground piping.

D. Flanges, unions, grooved-end-pipe couplings, and special fittings may be used, instead of joints indicated, on aboveground piping and piping in vaults.

E. Underground water-service piping NPS 3/4 to NPS 3 shall be:
1. PVC, Schedule 40 pipe; PVC, Schedule 40 socket fittings; and solvent-cemented joints.

F. Underground water-service piping NPS 4 to NPS 8 shall be the following:
1. PVC, Schedule 40 pipe; PVC, Schedule 40 socket fittings; and solvent-cemented joints.

G. Underground Fire-Service-Main Piping NPS 4 to NPS 12 shall be the following:
1. PVC, AWWA Class 200 pipe listed for fire-protection service; PVC Class 200 fabricated fittings; and gasketed joints.

H. Aboveground Fire-Service-Main Piping NPS 4 to NPS 12 shall be ductile-iron, grooved-end pipe; ductile-iron-pipe appurtenances; and grooved joints.

3.3 VALVE APPLICATIONS

A. General Application: Use mechanical-joint-end valves for NPS 3 and larger underground installation. Use threaded- or flanged-end valves for installation in vaults. Use UL/FMG, nonrising-stem gate valves for installation with indicator posts. Use corporation valves and curb valves with ends compatible with piping, for NPS 2 and smaller installation.

B. Drawings indicate valve types to be used. Where specific valve types are not indicated, the following requirements apply:
1. Underground Valves, NPS 3 and Larger: AWWA, cast-iron, nonrising-stem, resilient-seated gate valves with valve box.
2. Underground Valves, NPS 4 and Larger, for Indicator Posts: UL/FMG, cast-iron, nonrising-stem gate valves with indicator post.
3. Use the following for valves in vaults and aboveground:
   a. Gate Valves, NPS 2 and Smaller: Bronze, nonrising stem.
   b. Gate Valves, NPS 3 and Larger: AWWA, cast iron, OS&Y rising stem, metal seated.
   c. Check Valves: AWWA C508, swing type.
4. Pressure-Reducing Valves: Use for water-service piping in vaults and aboveground to control water pressure.
5. Detector Check Valves: Use for water-service piping in vaults and aboveground to detect unauthorized use of water.

CONFORMED

3.4 PIPING INSTALLATION

A. Piping installation shall comply with Section 15 “Water Systems” of the City of Turlock Standard Specifications.

3.5 JOINT CONSTRUCTION

A. Joint construction shall comply with Section 15 “Water Systems” of the City of Turlock Standard Specifications.

3.6 ANCHORAGE INSTALLATION

A. Anchorage installation shall comply with Section 15 “Water Systems” of the City of Turlock Standard Specifications.

3.7 VALVE INSTALLATION

A. Valve installation shall comply with Section 15 “Water Systems” of the City of Turlock Standard Specifications.

3.8 BACKFLOW PREVENTER INSTALLATION

A. Backflow preventer installation shall comply with Section 15 “Water Systems” of the City of Turlock Standard Specifications.

3.9 FIRE HYDRANT INSTALLATION

A. Fire hydrant installation shall comply with Section 15 “Water Systems” of the City of Turlock Standard Specifications.

3.10 FIRE DEPARTMENT CONNECTION INSTALLATION

A. Fire department connection installation shall comply with Section 15 “Water Systems” of the City of Turlock Standard Specifications.

3.11 CONNECTIONS

A. Connections shall comply with Section 15 “Water Systems” of the City of Turlock Standard Specifications

3.12 FIELD QUALITY CONTROL

A. Piping Tests: Conduct piping tests before joints are covered and after concrete thrust blocks have hardened sufficiently. Fill pipeline 24 hours before testing and apply test pressure to stabilize system. Use only potable water.

B. Hydrostatic Tests: Test at not less than one-and-one-half times working pressure for two hours.
   1. Increase pressure in 50-psig increments and inspect each joint between increments. Hold at test pressure for 1 hour; decrease to 0 psig. Slowly increase again to test pressure and hold for 1 more hour. Maximum allowable leakage is 2 quarts per hour per 100 joints. Remake leaking joints with new materials and repeat test until leakage is within allowed limits.

C. Prepare reports of testing activities.

CONFORMED

3.13 IDENTIFICATION

A. Install continuous underground detectable warning tape during backfilling of trench for underground water-distribution piping. Locate below finished grade, directly over piping. Underground warning tapes are specified in Section 312000 "Earth Moving."

B. Permanently attach equipment nameplate or marker indicating plastic water-service piping, on main electrical meter panel.

3.14 CLEANING

A. Clean and disinfect water-distribution piping as follows:
   1. Purge new water-distribution piping systems and parts of existing systems that have been altered, extended, or repaired before use.
   2. Use purging and disinfecting procedure prescribed by authorities having jurisdiction or, if method is not prescribed by authorities having jurisdiction, use procedure described in NFPA 24 for flushing of piping. Flush piping system with clean, potable water until dirty water does not appear at points of outlet.
   3. Use purging and disinfecting procedure prescribed by authorities having jurisdiction or, if method is not prescribed by authorities having jurisdiction, use procedure described in AWWA C651 or do as follows:
      a. Fill system or part of system with water/chlorine solution containing at least 50 ppm of chlorine; isolate and allow to stand for 24 hours.
      b. Drain system or part of system of previous solution and refill with water/chlorine solution containing at least 200 ppm of chlorine; isolate and allow to stand for 3 hours.
      c. After standing time, flush system with clean, potable water until no chlorine remains in water coming from system.
      d. Submit water samples in sterile bottles to authorities having jurisdiction. Repeat procedure if biological examination shows evidence of contamination.

B. Prepare reports of purging and disinfecting activities.

END OF SECTION

CONFORMED

SECTION 22 1313

FACILITY SANITARY SEWERS

PART 1 GENERAL

1.1 RELATED DOCUMENTS

A. Drawings and general provisions of the Contract, including General and Supplementary Conditions and Division 01 Specification Sections, apply to this Section.

1.2 SUMMARY

A. Section Includes:
   1. Pipe and fittings.
   2. Cleanouts.

1.3 DEFINITIONS

A. FRP: Fiberglass-reinforced plastic.

1.4 ACTION SUBMITTALS

A. Product Data: For the following:
   1. Expansion joints and deflection fittings.
   2. Backwater valves.

B. Shop Drawings: For manholes. Include plans, elevations, sections, details, and frames and covers.

1.5 INFORMATIONAL SUBMITTALS

A. Coordination Drawings: Show pipe sizes, locations, and elevations. Show other piping in same trench and clearances from sewer system piping. Indicate interface and spatial relationship between manholes, piping, and proximate structures.

B. Profile Drawings: Show system piping in elevation. Draw profiles to horizontal scale of not less than 1 inch equals 50 feet and to vertical scale of not less than 1 inch equals 5 feet. Indicate manholes and piping. Show types, sizes, materials, and elevations of other utilities crossing system piping.

C. Product Certificates: For each type of cast-iron soil pipe and fitting, from manufacturer.

D. Field quality-control reports.

1.6 DELIVERY, STORAGE, AND HANDLING

A. Do not store plastic manholes, pipe, and fittings in direct sunlight.

B. Protect pipe, pipe fittings, and seals from dirt and damage.

C. Handle manholes according to manufacturer's written rigging instructions.

1.7 PROJECT CONDITIONS

A. Interruption of Existing Sanitary Sewerage Service: Do not interrupt service to facilities occupied by Owner or others unless permitted under the following conditions and then only after arranging to provide temporary service according to requirements indicated:
   1. Notify City of Turlock no fewer than two days in advance of proposed interruption of service.

2. Do not proceed with interruption of service without City of Turlock's written permission.

PART 2 PRODUCTS

2.1 DUCTILE-IRON, GRAVITY SEWER PIPE AND FITTINGS

A. Ductile-iron, gravity sewer pipe and fittings shall comply with the Section 16 "Wastewater Collection System", of the City of Turlock Standard Specifications.

2.2 PVC PIPE AND FITTINGS

A. PVC pipe and fittings shall comply with the Section 16 "Wastewater Collection System", of the City of Turlock Standard Specifications.

2.3 CLEANOUTS

A. Cleanouts shall comply with the Section 16 "Wastewater Collection System", of the City of Turlock Standard Specifications.

PART 3 EXECUTION

3.1 EARTHWORK

A. Earthwork shall comply with Section 14 "Trenching and Backfilling" of the City of Turlock Standard Specifications.

3.2 PIPING INSTALLATION

A. Piping installation shall comply with the Section 16 "Wastewater Collection System", of the City of Turlock Standard Specifications.

3.3 PIPE JOINT CONSTRUCTION

A. Join gravity-flow, nonpressure, drainage piping according to the following:
   1. Join hub-and-spigot, cast-iron soil piping with gasket joints according to CISPI's "Cast Iron Soil Pipe and Fittings Handbook" for compression joints.
   2. Join hub-and-spigot, cast-iron soil piping with calked joints according to CISPI's "Cast Iron Soil Pipe and Fittings Handbook" for lead and oakum calked joints.
   3. Join hubless cast-iron soil piping according to CISPI 310 and CISPI's "Cast Iron Soil Pipe and Fittings Handbook" for hubless-coupling joints.
   4. Join ductile-iron, gravity sewer piping according to AWWA C600 for push-on joints.
   5. Join ABS sewer piping according to ASTM D 2321 and ASTM D 2751 for elastomeric-seal joints.
   6. Join PVC cellular-core sewer piping according to ASTM D 2321 and ASTM F 891 for solvent-cemented joints.
   7. Join PVC corrugated sewer piping according to ASTM D 2321.
   8. Join PVC profile sewer piping according to ASTM D 2321 for elastomeric-seal joints or ASTM F 794 for gasketed joints.
   9. Join PVC Type PSM sewer piping according to ASTM D 2321 and ASTM D 3034 for elastomeric-seal joints or ASTM D 3034 for elastomeric-gasket joints.
   10. Join PVC gravity sewer piping according to ASTM D 2321 and ASTM D 3034 for elastomeric-seal joints or ASTM D 3034 for elastomeric-gasket joints.
   11. Join fiberglass sewer piping according to ASTM D 4161 for elastomeric-seal joints.
   12. Join nonreinforced-concrete sewer piping according to ASTM C 14 and ACPA's "Concrete Pipe Installation Manual" for rubber-gasket joints.
   13. Join reinforced-concrete sewer piping according to ACPA's "Concrete Pipe Installation Manual" for rubber-gasket joints.
   14. Join dissimilar pipe materials with nonpressure-type, flexible or rigid couplings.

3.4 CLEANOUT INSTALLATION

A. Install cleanouts and riser extensions from sewer pipes to cleanouts at grade. Use cast-iron soil pipe fittings in sewer pipes at branches for cleanouts, and use cast-iron soil pipe for riser extensions to cleanouts. Install piping so cleanouts open in direction of flow in sewer pipe.
   1. Use Light-Duty, top-loading classification cleanouts in earth or unpaved foot-traffic areas.
   2. Use Medium-Duty, top-loading classification cleanouts in paved foot-traffic areas.
   3. Use Heavy-Duty, top-loading classification cleanouts in vehicle-traffic service areas.
   4. Use Extra-Heavy-Duty, top-loading classification cleanouts in roads.

B. Set cleanout frames and covers in earth in cast-in-place-concrete block, 18 by 18 by 12 inches deep. Set with tops 1 inch above surrounding grade.

C. Set cleanout frames and covers in concrete pavement and roads with tops flush with pavement surface.

3.5 CONNECTIONS

A. Connections shall comply with the Section 16 “Wastewater Collection System”, of the City of Turlock Standard Specifications.

3.6 IDENTIFICATION

A. Arrange for installation of green warning tapes directly over piping and at outside edges of underground manholes.
   1. Use warning tape or detectable warning tape over ferrous piping.
   2. Use detectable warning tape over nonferrous piping and over edges of underground manholes.

3.7 FIELD QUALITY CONTROL

A. Inspect interior of piping to determine whether line displacement or other damage has occurred. Inspect after approximately 24 inches of backfill is in place, and again at completion of Project.

   1. Submit separate report for each system inspection.
   2. Defects requiring correction include the following:
      a. Alignment: Less than full diameter of inside of pipe is visible between structures.
      b. Deflection: Flexible piping with deflection that prevents passage of ball or cylinder of size not less than 92.5 percent of piping diameter.
      c. Damage: Crushed, broken, cracked, or otherwise damaged piping.
      d. Infiltration: Water leakage into piping.
      e. Exfiltration: Water leakage from or around piping.

   3. Replace defective piping using new materials, and repeat inspections until defects are within allowances specified.
   4. Reinspect and repeat procedure until results are satisfactory.

B. Test new piping systems, and parts of existing systems that have been altered, extended, or repaired, for leaks and defects.
   1. Do not enclose, cover, or put into service before inspection and approval.
   2. Test completed piping systems according to requirements of authorities having jurisdiction.
   3. Schedule tests and inspections by authorities having jurisdiction with at least 24 hours' advance notice.
   4. Submit separate report for each test.
   5. Hydrostatic Tests: Test sanitary sewerage according to requirements of authorities having jurisdiction and the following:
      a. Fill sewer piping with water. Test with pressure of at least 10-foot head of water, and maintain such pressure without leakage for at least 15 minutes.
      b. Close openings in system and fill with water.

CONFORMED

c. Purge air and refill with water.
d. Disconnect water supply.
e. Test and inspect joints for leaks.

6. Air Tests: Test sanitary sewerage according to requirements of authorities having jurisdiction, UNI-B-6, and the following:
   a. Option: Test plastic gravity sewer piping according to ASTM F 1417.
   b. Option: Test concrete gravity sewer piping according to ASTM C 924.

C. Leaks and loss in test pressure constitute defects that must be repaired.

D. Replace leaking piping using new materials, and repeat testing until leakage is within allowances specified.

3.8 CLEANING

A. Clean dirt and superfluous material from interior of piping.

END OF SECTION

CONFORMED

SECTION 22 40 00

PLUMBING

PART 1 GENERAL

1.1 The General Conditions and Supplementary Conditions apply to this Section.

1.2 SCOPE:
Provide plumbing where shown on the Drawings, as specified herein, and as needed for a complete and proper installation including, but not necessarily limited to:

A. Domestic hot and cold water piping systems

B. Drain, waste, and vent systems

C. Gas, water and sewer service connections per local requirements

D. Plumbing fixtures and trim as shown on the Drawings

E. Condensate lines

1.3 General Contractor shall provide temporary sanitary facilities for all trades.

1.4 DRAWINGS:

A. Examine all drawings prior to starting of work and report any discrepancies in writing to the Architect.

B. Verify all dimensions at the building site and check existing conditions before beginning work. Make changes which are necessary to install the work in harmony with other crafts; they shall be first approved by the Architect.

C. Execute work mentioned in the specifications and not shown on the drawings, or vice versa, the same as if specifically mentioned in both.

D. Use adequate numbers of skilled workmen who are thoroughly trained and experienced in the necessary crafts and who are completely familiar with the specified requirements and the methods needed for proper performance of the work of this Section.

1.5 CODES AND REGULATIONS:

A. Provide all work and materials in full accordance with the latest rules and regulations of the:

1. 2013 California Building Code, reference 2009 IBC.

2. 2013 California Plumbing Code, reference 2009 UPC.

3. 2013 California Mechanical Code, reference 2009 UMC.

4. 2013 California Electrical Code, reference 2008 NEC.

5. 2013 California Fire Code, reference 2009 IFC.

6. Title 24, California Code of Regulations.

Nothing in these plans or specifications is to be construed to permit work not conforming to these codes. Furnish without extra charge, any additional material and labor required to comply with these rules and regulations.

1.6 SUBSTITUTIONS AND MATERIALS LIST:

A. Product names are used as qualitative standards, however other materials or methods shall not be used unless approved in writing by the architect. The burden of proof as to the equality of any proposed material shall be upon the contractor, and the architect's decision is final. Only one request for substitution shall be considered for each item. Equipment capacities specified are minimum acceptable.

B. Product Data: Submit seven (7) copies of the manufacturer's technical product data and installation instructions for each type of material listed in this SECTION.

C. Maintenance Data: Submit seven (7) copies maintenance data and replacement material lists for each type of material listed in this section. Include this data and product data in maintenance manual.

D. Any mechanical, electrical, structural or other changes required for the installation of any substituted equipment shall be made to the satisfaction of the architect and without additional cost to the owner. Approval by the architect of the substituted equipment and/or dimensional drawings does not waive these requirements. With submittal, provide drawings showing substituted equipment.

E. Approval of material shall not be construed as authorizing any deviations from the specifications unless the attention of the architect has been directed to the specific deviations.

F. Furnish to the Inspector, upon request, complete installation shop drawings of the same approved substitutions and drawings.

1.7 STERILIZATION CERTIFICATE:
Upon completion of water line sterilization, deliver to the Architect two copies of an acceptable "Certificate of Performance" for that activity.

1.8 MANUALS:

A. Upon completion of the work of this Section, deliver to the Architect one copy of an operation and maintenance manual compiled in accordance with the provisions of the General Requirements.

B. Include within each manual a copy of the Project Record Documents showing all work of this Section.

1.9 FIELD MEASUREMENT:
Make necessary measurements in the field to assure precise fit of items included in plumbing. Verify dimensions with all framing and concrete work prior to installing any components. Notify architect immediately of any discrepancies.

1.10 Install fixtures for accessibility requirements at locations shown on plans.

PART 2 MATERIALS

2.1 FIXTURE SCHEDULE (As shown on Plumbing Drawings – see PLUMBING FIXTURE SCHEDULE)

2.2 PIPE SCHEDULE (As shown on Plumbing Drawings – see PLUMBING MATERIAL SPECIFICATIONS)

2.3 MISCELLANEOUS MATERIALS:

A. Gate valves: Provide solid wedge disc, rising stem, WOG; rising stem: Provide Nibco T-126 bronze, screwed, or 5-126, solder.

B. Globe valves: Provide replaceable composition disc suitable for 200 degree F water: 2 1/2 and smaller; Provide Nibco F-718-B, bronze, screwed.

C. Gas cocks: 2" and smaller: Provide 250#, bronze, screwed, square head, 125# (Rockwell Fig 142).

D. Ball valves: two or three piece construction, forged bronze body, chrome plated brass ball, threaded ends, Teflon seats, PTFE or reinforced Teflon stem seals, lever handles. Milwaukee BA100/150, BA300/350.

E. Flashing: Where pipes of this Section pass through the roof, flash with 24 ga. galvanized sheet metal, counter flashing to be 24 ga. sheet metal.

F. Traps for lavatories and sinks, except service sinks, chrome plated 17-ga. brass with clean out.

G. Insulation:

1. Provide 1" thick, 3 ½ pound per cubic foot fiberglass with all-service jacket (aluminum jacket with stainless steel bands outdoors) for all hot water and hot water returns (service at 105-140 ℉ up to 4" diameter.

2. Pipe wrapping

a. Steel piping in concrete or underground:

(1) Wrap with 20 mil tape.

(2) Fittings and other joints: Wrap in the field with 20 mil tape and primer.

(3) Provide 50% overlap on tape weld rubber coating.

b. Sleeves: Where pipes pass through concrete, masonry, or stud walls, or pass through ceilings, provide a sleeve of the size required.

H. Provide other materials, not specifically described but required for a complete and proper installation, as selected by the Contractor subject to the approval of the Architect.

I. Fixtures and Equipment: Provide complete plumbing fixture, trim, and equipment where shown on the Drawings.

PART 3 EXECUTION

3.1 SURFACE CONDITIONS:
Examine the areas and conditions under which work of this Section will be performed. Correct conditions detrimental to timely and proper completion of the Work. Do not proceed until unsatisfactory conditions are corrected.

3.2 PLUMBING SYSTEM LAYOUT:

A. Lay out the plumbing system in careful coordination with the Drawings, determining proper elevations for all components of the system and using only a minimum number of bends to produce a satisfactorily functioning system.

B. Follow the general layout shown on the Drawings in all cases except where other work may interfere.

C. Lay out pipes to fall within partition, wall, or roof cavities, and to not require furring other than as shown on the Drawings.

3.3 Perform trenching and backfilling associated with the work of this Section in strict accordance with all provisions of these Specifications.

A. Cut bottom of trenches to grade. Make trenches 12" wider than the greatest dimension of the pipe.

B. Bedding and backfilling:

1. Install piping promptly after trenching. Keep trenches open as short a time as practicable.

2. Under the building, install pipes on a 6" bed of damp sand. Backfill to bottom of slab with damp sand.

3. Outside the building, install underground piping on a 6" bed of damp sand. Backfill to within 12" of finish grade with damp sand. Backfill remainder with native soil.

4. Do not backfill until installation has been approved and until Project Record Documents have been properly annotated.

3.4 INSTALLATION OF PIPING AND EQUIPMENT

A. General:

1. Proceed as rapidly as the building construction will permit.

2. Thoroughly clean items before installation. Cap pipe openings to exclude dirt until fixtures are installed and final connections have been made.

3. Cut pipe accurately, and work into place without springing or forcing, properly clearing windows, doors, and other openings. Excessive cutting or other weakening of the building will not be permitted.

4. Show no tool marks or threads on exposed plated, polished, or enameled connections from fixtures. Tape all finished surfaces to prevent damage during construction.

5. Make changes in directions with fittings; make changes in main sizes with eccentric reducing fittings. Unless otherwise noted, install water supply piping with tap tees feeding up to fixtures.

6. Run horizontal sanitary and storm drainage piping at a uniform grade of 1/4" per ft, unless otherwise noted. Run horizontal water piping with an adequate pitch upwards indirection of flow to allow complete drainage.

7. Provide sufficient swing joint, ball joints, expansion loops, and devices necessary for a flexible piping system, whether or not shown on the Drawings.

8. Support piping independently at pumps, coils, tanks, and similar locations, so that weight or pipe will not be supported by the equipment.

9. Pipe the drains from pump glands, drip pans, relief valves, air vents, and similar locations, to spill over an open sight drain, floor drain, or other acceptable discharge point, and terminate with a plain end unthreaded pipe 6" above the drain.

10. Securely bolt all equipment, isolators, hangers, and similar items in place.

CONFORMED

11. Support each item independently from other pipes. Do not use wire for hanging or strapping pipes.

12. Provide complete dielectric isolation between ferrous and non-ferrous metals.

13. Provide union and shut off valves suitably located to facilitate maintenance and removal of equipment and apparatus, whether shown or not.

14. Provide adequate drainage slope on condensate drains.

15. Equipment access:

    a. Install piping, equipment, and accessories to permit access for maintenance. Relocate items as necessary to provide such access, and without additional cost to the Owner.

    b. Provide access doors where valves, water hammer arrestors, motors, or equipment requiring access for maintenance are located in walls or chases or above ceilings. Coordinate location of access doors with other trades as required.

B. Pipe Joints

1. Copper tubing:

    a. Cut square, remove burrs, and clean inside of female filling to a bright finish.

        (1) Apply solder flux with brush to tubing.

        (2) Remove internal parts of solder-end valves prior to soldering.

    b. Provide dielectric unions at points of connection of copper tubing to ferrous piping and equipment.

    c. For joining copper tubing, use:

        (1) Water piping 3" and smaller: “Lead free” solder;

        (2) Underground: “sil-fos” brazing.

2. Screwed piping:

    a. Deburr cuts.

        (1) Do not ream exceeding internal diameter of the pipe.

        (2) Thread to requirements of ANSI B2.1.

    b. Use Teflon tape on male thread prior to joining other services.

3. Leaky joints:

    a. Remake with new material.

    b. Remove leaking section and/or fitting as directed.

    c. Do not use thread cement or sealant to tighten joint.

C. Pipe Supports:

1. Support suspended piping with clevis or trapeze hangers and rods.

2. Space hangers and support for horizontal steel pipes according to the following schedule:

Pipe size:	Maximum spacing on centers:
1-1/4" and smaller	8'-0"
1-1/2" to 3":	10'-0"
4" to 5":	14'-0"

3. Space hangers and supports for horizontal copper tubing according to the following schedule:

Tube size:	Maximum spacing on centers:
1" and smaller	6'-0"
1-1/2"	7'-0"
2":	8'-0"
2-1/2":	9'-0"
3" and larger:	10'-0"

4. Provide sway bracing on hangers longer than 18".

5. Support vertical piping with riser clamps secured to the piping and resting on the building structure. Provide at partition top plates.

6. Provide insulation continuous through hangers and rollers. Protect insulation by galvanized steel shields.

7. Arrange pipe supports to prevent excessive deflection, and to avoid excessive bending stress.

8. Support piping from inserts or anchors in concrete slabs.

9. Hubless piping:

   a. Provide hangers on the piping at each side of, and within 6" of, hubless pipe coupling so the coupling will bear no weight.

   b. Do not provide hangers on couplings.

   c. Provide hangers adequate to maintain alignment and to prevent sagging of the pipe.

   d. Make adequate provision to prevent shearing and twisting of the pipe and the joint.

D. Sleeves and Openings

1. Provide sleeves for each pipe passing through walls, partitions, floors, roofs, and ceilings.

   a. Set pipe sleeves in place before concrete is placed.

   b. For uninsulated pipe, provide sleeves two pipe sizes larger than the pipe passing through, or provide a minimum of 1/2" clearance between inside and outside of the pipe.

c. For insulated pipe, provide sleeves of adequate size to accommodate the full thickness of pipe covering, with clearance for packing and caulking.

2. Caulk the space between sleeve and pipe or pipe covering, using a noncombustible, permanently plastic, waterproof, non-staining compound which leaves a smooth finished appearance, or pack with noncombustible asbestos cotton, rope, or fiberglass to within 1/2" of both wall faces, and provide the waterproof compound described above.

3. Finish and escutcheons:

a. Smooth up rough edges around sleeves with plaster or spackling compound.

b. Provide 1" wide chrome or nickel plated escutcheons on all pipes passing through walls, floors, partitions, ceilings, and similar locations.

Size the escutcheons to fit pipe and covering.

Hold escutcheons in place with set screw.

E. Cleanouts:

1. Secure the Architect's approval of locations for cleanouts in finished areas prior to installation.

2. Provide cleanouts of same nominal size as the pipes they serve.

3. Make cleanouts accessible. After pressure tests are made and approved, thoroughly graphite the cleanout threads.

F. Valves:

1. Provide valves in water and gas systems. Locate and arrange so as to give complete regulation of apparatus, equipment and fixtures.

2. Provide valves in at least the following locations:

a. In branches and/or headers of water piping serving a group of fixtures.

b. On both sides of apparatus and equipment.

c. For shutoff of risers and branch mains.

d. For flushing and sterilizing the system.

e. Where shown on the Drawings.

3. Locate valves for easy accessibility and maintenance.

G. Backflow Prevention:

1. Protect plumbing fixtures, faucets with hose connections, and other equipment having plumbing connection, against possible back-siphonage.

2. Arrange for testing of backflow devices as required by the governmental agencies having jurisdiction.

H. Plumbing Fixture Installation

1. Installation:

   a. Set fixtures level and in proper alignment with respect to walls and floors, and with fixtures equally spaced.

   b. Provide supplies in proper alignment with fixtures and with each other.

   c. Provide flush valves in alignment with the fixture, without vertical or horizontal offsets.

2. Grout wall and floor mounted fixtures watertight where the fixtures are in contact with walls and floors.

3. Caulk deck-mounted trim at the time of assembly, including fixture and casework mounted. Caulk self-rimming sinks installed in casework.

I. Disinfection of Water Systems

1. Disinfect hot and cold water systems.

   a. Notify the Architect at least 48 hours prior to start of the disinfection process.

   b. Upon completion of disinfecting, secure and submit the Certificate of Performance required under Article 2a of this Section, stating system capacity, disinfectant used, time and rate of disinfectant applied and resultant residuals in ppm at completion.

2. When disinfection operation is completed, and after final flushing, securing, and analysis, based on water samples from the system, showing test negative for coli-aerogene organisms. Provide a total plate count of less than 100 bacteria per cc, or equal to the control sample.

   a. Upon completion of disinfecting, secure and submit the Certificate of Performance required by the County Health Dept, stating system capacity, disinfectant used, time and rate of disinfectant applied and resultant residuals in ppm at completion.

   b. Use disinfectant method approved by the Owner.

3. If analysis results are not satisfactory, repeat the disinfection procedures and retest until specified standards are achieved.

J. Other Testing and Adjusting.

1. Provide personnel and equipment, and arrange for and pay the costs of, all required tests and inspections required by governmental agencies having jurisdiction.

2. Where tests show materials or workmanship to be deficient, replace or repair as necessary, and repeat the tests until the specified standards are achieved.

3. Adjust the system to optimum standards of operation.

END OF SECTION

CONFORMED

SECTION 23 08 00

HEATING, VENTILATION, AND AIR CONDITIONING

PART 1 GENERAL

1.1 The General Conditions apply to this section.

1.2 SCOPE
Furnish and install all heating, ventilating and air conditioning work indicated on the drawings and described herein. Also, any incidental work not shown or specified that is necessary to provide the complete system.

1.3 DRAWINGS

A. Examine all drawings prior to starting of work and report any discrepancies in writing to the Architect.

B. Verify all dimensions at the building site and check existing conditions before beginning work. Make changes which are necessary to install the work in harmony with other crafts; they shall be first approved by the Architect.

C. Execute work mentioned in the specifications and not shown on the drawings, or vice versa, the same as if specifically mentioned in both.

1.4 CODE RULES AND SAFETY ORDERS

A. Provide all work and materials in full accordance with the latest rules and regulations of the:

1. 2013 California Building Code, reference 2009 IBC.

2. 2013 California Plumbing Code, reference 2009 UPC.

3. 2013 California Mechanical Code, reference 2009 UMC.

4. 2013 California Electrical Code, reference 2008 NEC.

5. 2013 California Fire Code, reference 2009 IFC.

6. Title 24, California Code of Regulations.

Nothing in these plans or specifications is to be construed to permit work not conforming to these codes. Furnish without extra charge, any additional material and labor required to comply with these rules and regulations.

1.5 FEE AND PERMITS:
Procure and pay for all licenses, fees and permits required.

1.6 UTILITY COORDINATION:
It shall be the contractor's responsibility to arrange and coordinate with the utility companies all requests for service(s) and the installation of meter(s) and services. The contractor shall furnish all documentation and information that the utility companies require prior to start of construction. Within 35 calendar days of the award of contract, the contractor shall submit to the architect a letter with copies of drawings that are sent to the utility companies for such services.

1.7 FRAMING, CUTTING AND PATCHING
Special framing, recesses, chases and backing for work of this section is covered under other sections. Be responsible for proper placement of all pipe sleeves, hangers and supports and location of openings

for work of this section.

1.8 SUBSTITUTIONS AND MATERIALS LIST

A. Product names are used as qualitative standards, however other materials or methods shall not be used unless approved in writing by the architect. The burden of proof as to the equality of any proposed material shall be upon the contractor, and the architect's decision is final. Only one request for substitution shall be considered for each item. Equipment capacities specified are minimum acceptable.

B. Submit in indexed folders, five (5) sets of submittals for approval within 35 days after the award of the contract. The submittals shall be accompanied by equipment shop drawings, pump performance curves, and other pertinent data, showing the size, capacity and the proposed materials to be used. Submittals shall be provided, whether substitutions are made or not, and shall be listed in the order in which they appear in the schedules. Submittals shall be provided and approved prior to start of construction.

C. Any mechanical, electrical, structural or other changes required for the installation of any substituted equipment shall be made to the satisfaction of the architect and without additional cost to the owner. Approval by the architect of the substituted equipment and/or dimensional drawings does not waive these requirements. With submittal, provide drawings showing substituted equipment.

D. Approval of material shall not be construed as authorizing any deviations from the specifications unless the attention of the architect has been directed to the specific deviations.

E. Furnish to the Inspector, upon request, complete installation shop drawings of the same approved substitutions and drawings.

1.9 SITE CONDITIONS

Information on the drawings relative to existing conditions is approximate only. Deviations found necessary during progress of construction to conform to actual conditions, as approved by the architect, shall be made without additional cost to the owner. The contractor shall be held responsible for any damage caused to the existing property and services. Promptly notify the architect if services are found which are not shown on the drawings.

1.10 GUARANTEE

A. Repair or replace any defective work, material or part which may appear within one year of the date of acceptance. This shall include damage by leaks.

B. On failure to comply with the above guarantee within a reasonable length of time, after notification is given, the architect shall have the repairs made at the contractor's expense.

1.11 MAINTENANCE AND OPERATING INSTRUCTION

A. Furnish four complete sets of operating and maintenance instructions bound in a hardboard binder and indexed. Start compiling the data upon approval of list of materials, Final inspection will not be made until booklets are approved by the architect.

B. These sets shall incorporate the following:

1. Complete operating instructions for each item of equipment listing in detail the lubricants to be used, frequency of lubrication, inspections required, adjustments, etc.

2. Manufacturer's documentation with part numbers, instructions etc., for each item of equipment.

C. Post service telephone numbers and/or addresses in an appropriate place as designated by the architect.

1.12 RECORD DRAWINGS

A. Upon completion of the work, and as precedent to final payment, the contractor shall provide and deliver, to the architect, updated reproducible drawings showing the work exactly as installed.

PART 2 PRODUCTS

2.1 Provide equipment as specified on the drawings

PART 3 EXECUTION

3.1 MATERIAL STORAGE

A. During storage at the construction site, all duct and related air distribution component openings shall be covered with tape, plastic, sheetmetal or other methods acceptable to the local authority to reduce dust or debris collection in compliance with CalGreen section 5.504.3.

3.2 FILTERS

A. Air filters shall be of an approved type tested in accordance with test method SFM Std. 12-71-1 as shown in Part 12, Title 24, California Code of Regulations. Preformed filters having combustible framing shall be tested as a complete assembly. Air filters in all occupancies shall be Class 2 or better (as shown in the State Fire Marshall listing).

B. Provide temporary filters for all fans that are used during construction; after all construction dirt has been removed from the building, install new filters at no additional cost to the Owner.

C. Air filters shall be accessible for cleaning or replacement.

3.3 SHEET METAL WORK

A. Construct and install all sheet metal in accordance with the latest SMACNA recommendations. Provide variations in duct size, and additional duct fittings as required to clear obstructions and maintain clearances, as approved by the Architect, at no extra cost to the Owner. Pressure class shall be 2" w.c.

B. Exterior ductwork shall be sealed water-tight with hardcast RTA 50 adhesive and DT-tape or Glenkote.

C. Interior ductwork shall be sealed water-tight with hardcast RTA 20 adhesive and DT-tape or Glenkote.

D. Duct sealer system must be installed in strict conformance with the manufacturer's application instructions.

E. Provide drive slip or equivalent flat seams for ducts where necessary due to spacer limitations. On ducts with flat seams, provide standard reinforcing inside of duct.

F. Provide Duro-Dyne Ventlon flexible connections on inlet and outlet of each fan.

G. Duct size shown on lined duct is the inside dimension.

H. All round ductwork shall be metal, except fiberglass flexible duct shall be used on the final 6'-0" connection to the diffuser in concealed areas. Transitions and bends to ductwork, to avoid obstructions, must be approved by the Architect. Protect ductwork from damage during and after erection until final inspection.

I. Flexible ducts shall conform the following requirements:

1. Factory-made air ducts shall be approved for the use intended or shall conform to the requirements of U.M.C. Standard No. 6-1. Each portion of a factory-made air duct system shall be identified by the manufacturer with a label or other suitable identification indicating compliance with U.M.C. Standard No. 6-1 and its class designation. These ducts shall be listed and shall be installed in accordance with the terms of their listing.

2. Flexible ducts shall consist of an exterior reinforced laminated vapor barrier, 1-1/2" thick fiber glass insulation (K=.25 @ 75^0F), encapsulated spring steel wire Helix and impervious, smooth, non-perforated interior vinyl liner. Individual lengths of flexible ducts shall contain factory fabricated steel connection collars.

3. Flexible ducts shall be supported at or near mid-length with 2” wide 28 GA. Steel hanger collar attached to the structure with an approved duct hanger. Installation shall minimize sharp radius turns or offsets. The maximum length connecting to terminal outlets shall be seven feet.

4. Flexible ducts may be used to cross seismic joints without offsets.

5. Flexible air ducts shall be anchored and supported per the latest SMACNA air duct annual.

3.4 GRILLES

A. Provide all outlets with gaskets and install so that there will be no streaking of the walls or ceiling due to leakage.

B. Furnish all diffusers, registers, and grilles with baked enamel finish—color to be coordinated with architect—and white gaskets on ceiling-mounted outlets.

C. All visible surfaces behind air outlet faces to be flat black.

3.5 VIBRATION ISOLATION

A. Isolate all ventilating and air conditioning equipment, including conduit, piping, duct, drains, etc., so that equipment will operate under continuous demand without objectionable vibrations.

3.6 TESTING AND BALANCING

A. Coordinate testing and balancing agency work with work of other trades.

B. Contractor shall provide for adjustments and/or additions or modifications to fan and motor sheaves, belts, damper linkages and the like to achieve proper air balance at no additional cost.

C. Testing and balancing shall be performed in complete accordance with AABC National Standards for Field Measurements and Instrumentation. Testing and balancing shall be performed on air distribution systems.

D. Balance air quantities of supply, return, outside air, and exhaust to achieve those given on Drawings with accuracy within minus 5 percent and plus 10 percent. Measure the total air quantity at each fan.

END OF SECTION

CONFORMED

SECTION 26 05 00

COMMON WORK RESULTS FOR ELECTRICAL

PART 1 - GENERAL

1.1 SUMMARY

A. Section includes

1. Scope: The Section consists of general requirements and standard specifications for all work included under Division 26. Where specific specifications requirements of other Sections of Division 26 are in conflict with these General Requirements, those specific requirements shall govern.

   The project comprises the modernization of various areas of the hospital as shown on the plans, including replacement of existing sub-panels, new lighting, new receptacles, connection of mechanical equipment and the modification/relocation of electrical devices and systems to accommodate the Architectural renovations.

   The electrical work shall consist of all electrical demolition activities required in association with the demolition activities contained in the Architectural, Mechanical or Structural plans or specifications, in addition to those activities specified on the electrical plans and specifications. Provide all conduits, devices, fittings, fixtures, panels, and related electrical equipment required for a complete and operating system. Provide all raceways for Mech. unit controls, including energy management system. Provide all line voltage (over 50 V.) wiring, low voltage wiring by Mech. or Controls Contractors. All existing and new raceways shall be concealed where possible, surface raceway routing shall be approved by the Architect prior to installation. Paint all exposed raceways, seal all penetrations and firestop all rated penetrations.

   The Contractor is reminded that this project is a remodel to an existing facility. Existing electrical systems have not been entirely verified and these drawings must be accepted with this understanding. Contractor shall verify all existing conditions at the site prior to bid. He shall further furnish labor and materials to achieve indicated results even though all details are not shown. No additional costs will be allowed for these items.

   Provide all labor, materials tools plant equipment, transportation and perform all operations necessary for the proper execution and completion of all "Electrical Work" whether specifically mentioned or not; all as indicated, specified herein, and/or implied thereby to carry out the apparent intent thereof.

B. Related work under this section

1. Labor and materials required to furnish and install the electrical systems in a complete and operational fashion.
2. Carpentry, masonry, steel and concrete materials and labor required for construction of proper stands, bases and supports for electrical materials and equipment.
3. Cutting and patching of holes required by installation including flashing and counterflashing of roof and exterior wall penetrations.
4. Excavating, pumping and backfilling required for installation.
5. Repair of damage to the premises resulting from construction activities under this Section to Owner’s satisfaction.
6. Removal of work debris from construction activities to Owner’s satisfaction.
7. Testing and cleaning of equipment installed.

C. Work not under this section

1. Furnishing of motors, fans, compressors, water heaters, thermostats and motor starters included under Division 15, or as noted otherwise.
2. Finish painting of exposed metal surfaces included under Division 9, or as otherwise noted.

3. Electrical Contractor shall provide connections to mechanical equipment where voltage exceeds 50 V and all necessary raceways for low voltage controls.

D. Related sections

1. Where items specified in other Division 26 sections conflict with the requirements of this Section, the most stringent requirement shall govern.
2. The requirements of this Section apply to all Division 26 work, as applicable.
3. Consult all other sections, determine the extent and nature of related work and properly coordinate work specified herein with that specified elsewhere to provide a complete and working installation.
    a. The General Conditions and General Requirements, Division 1, are a part of and are to apply to all the work of this Section.
    b. Site Construction –Division 2: Earthwork, Boring
    c. Concrete –Division 3: All sections
    d. Metals –Division 5: Structural Metal Framing
    e. Wood and Plastic –Division 6: Rough Carpentry
    f. Thermal and Moisture Protection – Division 7:Dampproofing and Waterproofing, Flashing, Fire and Smoke Protection
    g. Doors and Windows – Division 8: Access Doors
    h. Finishes – Division 9: Painting and Coatings
    i. Equipment – Division 11: As provided
    j. Special Construction – Division 13: As provided
    k. Conveying Systems –Division 14 : As provided
    l. Mechanical –Division 15:Heat-Generation Equipment, Refrigeration Equipment, HVAC Equipment, HVAC Instrumentation and Controls

1.2 SUBMITTALS

A. Product Data

1. Prior to commencement of work and within 35 days after award of the contract, submit in ample time for approval in accordance with Division 1 a complete list of furnished equipment, material and shop drawings, including all substitutions. Partial or incomplete lists of materials will not be considered. Substitutions will be considered thereafter.
    a. Where it is in the best interest of Owner, Engineer may give written consent to a submittal received after expiration of designated time limits or for an additional re-submittal.
2. Substitutions
    a. If it is desired to make a substitution, submit complete information or catalog data to show equality of equipment or material offered to that specified. Substitutions will be interpreted to be all manufacturers other than those specifically listed by model or catalog number. No substitution will be allowed unless requested and approved in writing. Materials of equal merit and appearance, in the opinion of Architect and Engineer, will be approved for use. Architect and Engineer reserve the right to require originally specified items at no additional costs to Owner. Only one request for substitutions will be considered on each item of material or equipment.
    b. Acceptance of a substitute is not to be considered a release from the Specifications. Correct any deficiencies in an item, even though approved at the Contractor’s expense.
    c. Responsibility for installation of approved substitution is included herein. Make any changes required for installation of approved substituted equipment without additional costs.
    d. Failure to comply with any of the requirements of the above will necessitate that the specified materials be submitted and supplied.

B. Change Order Proposals

1. Shall comply with the requirements set forth by the General Conditions
2. All change order proposals and change orders, both additive and deductive, shall be accompanied by a detailed materials and labor breakdown for each specific task and/or item. The breakdown shall include actual materials costs plus overhead and profit, as well as labor units based upon the most recent NECA (National Electrical Contractors Association) Manual of Labor Units (NECA Index #4090) or equivalent publication for each specific task and item. Labor costs shall be computed as outlined within the General Conditions.

C. Closeout submittal

1. Furnish three complete sets of maintenance and operating instructions bound in a binder and indexed to Owner. Start compiling data upon approval of materials and equipment. Final inspection will not be made until Engineer approves binders. Refer also to Section 1 for additional requirements.
2. Provide one of each tool required for proper equipment operation and maintenance provided under this Section. All tools shall be delivered to the Owner at project completion.
3. Provide two keys to Owner for each lock furnished under this Section.
4. Record drawings
   a. Upon completion of Work, furnish Engineer with complete sets of plans (not marked blueprints) upon which shall be shown all work installed under Contract, which are not in accordance with the Construction Documents. Refer to Division 1 requirements.
   b. All symbols and designations used in preparing the Record Drawings shall match those used in the Construction Documents.

1.3 QUALITY ASSURANCE

A. References to codes, standards, specifications and recommendations of technical societies, trade organizations and governmental agencies shall mean that latest edition of such publications adopted and published prior to bid submittal. Such codes or standards shall be considered a part of this Specification as though fully repeated herein.

B. Work and materials shall be in full accordance with the latest rules and regulations of applicable state of local laws or regulations and standards of following:

1. National Fire Protection Association (NFPA)
2. California Electrical Code (CEC)
3. California Occupational Safety Health Act (Cal-OSHA)
4. California State Fire Marshall (CSFM)
5. California Code of Regulations (CCR)
6. Electrical Safety Orders, CAC Title 8 (ESO)
7. California Public Utilities Commissions, General Order 95 (GO-95)
8. Applicable rules and regulations of local utility companies.
9. NECA 1-2000, Standard Practices for Good Workmanship in Electrical Contracting

C. Nothing in the Construction Documents shall be construed to permit work not conforming to these Codes. Whenever the indicated material, workmanship, arrangement or construction is of high quality or capacity than that required by the above rules and regulations, the Construction Documents shall take precedence. Should there be any direct conflict between the rules and regulations and Construction Documents, the rules shall govern.

D. All electrical equipment and material furnished under this Section shall conform to NEMA and ASTM standards, CEC and bear the Underwriters' Laboratories (UL) label where such label is applicable.

E. Follow manufacturer's direction where these direction cover points not included with the Construction Documents.

1.4 DELIVERY, STORAGE AND HANDLING

A. Packing, shipping, handling and unloading

1. Damage to the equipment delivered to the site or in transit to the job shall be the responsibility of the Electrical Contractor.
2. Equipment and material delivery of shall be scheduled as required for timely, expeditious progress of Work.

B. Storage and protection

1. Storage and protection of job equipment is the responsibility Contractor.

C. Waste management and disposal

1. Comply with Division 1 requirements with regards to waste management and disposal.

1.5 PROJECT CONDITIONS

A. Discrepancies

1. In the event of discrepancies with the Contract Documents, Engineer shall be notified with sufficient time as stated within Division 1 to allow the issuing of an addendum prior to the bid opening.
2. If, in the event that time does not permit notification of clarification of discrepancies prior to the bid opening, the following shall apply:
   a. The drawings govern in matters of quantity and specifications govern in matters of quality.
   b. In the event of conflict within the drawings and specifications involving quantities or quality, the greater quantity or higher quality shall apply. Such discrepancies shall be noted and clarified within the contractor's bid. No additional allowances will be made because of errors, ambiguities or omissions which reasonably should have been discovered during the bid preparation.

B. Verify all power and communication utilities' requirements prior to commencement of any utility work. Make proper adjustments to the construction to satisfy the serving utility.

C. Information shown relative to services is based upon available records and data, but shall be regarded as approximate only. Make minor deviations found necessary to conform with actual locations and conditions without extra cost. Verify locations and elevations of utilities prior to commencement of excavation for new underground installation.

D. Exercise extreme care in excavating near existing utilities to avoid any damage thereto; be responsible for any damage caused by such operations. Contact all utility companies to obtain exact locations prior to commencement of construction.

E. The electrical plans indicate the general layout and arrangement; the architectural drawings and field conditions shall determine exact locations. Field verify all conditions and modify as required to satisfy design intent. Maintain all required working clearances.

F. Fees, permits and utility services

1. Obtain and pay for all permits and service charges required for the installation of this work. Arrange for required inspections and secure approvals from authorities having jurisdiction. Arrange for all utility connections and pay charges incurred including excess service charges if any.
2. Extra charges imposed by the electrical and communication utility companies shall be included in the bid, if available. Unless otherwise stated, these charges will be assumed included in the bid.

G. Provide and maintain temporary construction power. The General Contractor will pay for electric energy charges; refer to Division 1 for details. Should the Electrical Contractor be the prime contractor, the Electrical Contractor shall pay for energy charges.

1.6 SEQUENCING

A. Coordinate work within phasing plans as provided by the Owner.

1.7 WARRANTY

A. Furnish one-year guarantee in accordance with and in form required under Division 1. Repair or replace as may be necessary any defective work, material, or part without cost to the Owner, include repair or replacement of other work, furnishing, equipment or premises caused by such repair or replacement of defective work.

PART 2 -PRODUCTS

2.1 MATERIALS

A. Materials mentioned herein or on Drawings require that the items be provided and of quality noted or an approved equal. All materials shall be new, full weight, standard in all respects and in first-class condition. Insofar as possible, all materials used shall be of the same brand or manufacturer throughout for each class of material or equipment.

B. Trade names or catalog numbers stated herein indicts grade or quality of material desired. Materials, where applicable, shall UL labeled and in accordance with NEMA standards.

C. Dimensions, sizes and capacities shown are a minimum. Do not make changes without permission or Engineer

PART 3 -EXECUTION

3.1 EXAMINATION

A. Examine Construction Documents and Site; be familiar with types of construction where electrical installation is involved. Note carefully other sections of Specifications with their individual cross-references, standard details, etc. Any electrical work or materials shown either in Construction Documents, but not mentioned herein, or vice versa, shall be executed the same as if mentioned herein, in a workmanlike manner in accordance with NEMA Standards of Installation. Coordinate work with other crafts to avoid conflicts, and check all outlet locations with Architectural and Mechanical drawings and specifications. Make minor adjustments without additional cost to Owner. Engineer will make clarifications and rulings concerning any obvious discrepancies or omissions in work prior and after bidding. Perform all work involved in correcting obvious errors or omissions after award of Contract as directed by Engineer at Contractor's expense.

B. Examine site dimensions and locations against Drawings and become informed of all conditions under which work is to be done before submitting proposals. No allowance will be made for extra expense due to error.

C. Layouts of equipment, accessories and wiring systems are diagrammatic (not pictorial), but shall be followed as closely as possible. Construction Documents are for assistance and guidance, and exact locations, distance, levels, etc., will be governed by construction; accept same with this understanding.

D. Horsepower of motors or wattage of equipment indicated in Construction Documents is estimated horsepower or wattage requirement of equipment furnished under other sections of Specifications. Size all feeders (conduit and wiring), motor starters, overload protection and circuit breakers to suit horsepower of motors or wattage of equipment actually furnished under various sections of specifications. However, in no case shall feeders and branch circuits (conduit and wiring) and circuit breakers be of smaller capacities or sizes than those indicated on Drawings or specified, unless approved in writing by Engineer.

3.2 PREPARATION

A. Sealant

1. Seal all exterior wall penetrations in an approved watertight manner and to the satisfaction of Engineer and Architect.

B. Rust inhibitor

1. Channels, joiners, hangers, caps, nuts and bolts and associated parts shall be plated electrolytically with zinc followed immediately thereafter by treating freshly deposited zinc surfaces with chromic acid to obtain a surface which will not form a white deposit on surface for an average of 120 hours when subjected to a standard salt spray cabinet test, or shall be hot dipped galvanized

3.3 INSTALLATION

A. Equipment identification

1. Properly identify panelboards, remote control switches, push buttons, terminal boxes, etc. with a descriptive nameplate. Make nameplate with 3/32" laminated plastic with black background and white letters. Machine engraved letters 1/8" high for equipment in device box(es) and 1/4" high for panelboards, terminal cabinets or larger items. Punched strip type nameplates and cardholders in any form are not acceptable. Fasten nameplates with oval head machine screws, tapped into front cover/panel.

B. Working space

1. Provide adequate working space around electrical equipment in compliance with Article 4 of Electrical Safety Orders and NEC Article 110. In general provide 78" of headroom and 30" wide minimum clear workspace in front of panelboards and controls. In addition to the above, provide the following minimum working clearances:

   a. 0V – 150V (line-to-ground) provide 36" minimum clear distance.

   b. 151V – 600V (line-to-ground) provide 42" minimum clear distance.

C. Equipment supports

1. Anchor all electrical equipment to structure. Support systems shall be adequate to withstand seismic forces.

D. Excavating and backfilling

1. Excavate and backfill as required for installation of Work. Restore all surfaces, roadways, walks, curbs, walls existing underground installations, etc., cut by installations to original condition in an acceptable manner. Maintain all warning signs, barricades, flares and lanterns as required by ESO and local ordinances.

2. Dig trenches straight and true to line and grade, with bottom clear of any rock points. Support conduit for entire length on undisturbed original earth. Minimum conduit depth of pipe crown shall be 2' below finished or natural grade.

E. Forming, cutting and patching

1. In new construction, General Contractor shall provide any special forming, recesses, chased, etc., and provide wood blocking, backing and grounds as necessary for the proper installation of Electrical work. Be responsible for notifying General Contractor that such provision is necessary; layout work and check to see that it suits his requirements.

   a. Provide metal backing plates, anchor plates and such that are required for anchorage of Electrical work under this Section; securely weld or bolt to metal framing. Wood blocking or backing will not be permitted in combination with metal framing.

2. Be responsible for proper placement of pipe sleeves, hangers, inserts and supports for this Work.

F. Concrete work

1. Provide concrete work related solely to Electrical work. Concrete work, including forming and reinforcing steel installed under this Division, shall comply with all applicable requirements of Division 1, or in accordance with the State of California Standard Specifications issued by the Department of Transportation.

3.4 REPAIR/RESTORATION

A. Cutting, patching and repairing of existing construction to permit installation of Work is the responsibility of this Section. Repair or replace all damage to existing work in kind to Owner's satisfaction.

B. Obtain Engineer's approval prior to performing any cutting or patching of concrete, masonry, wood or steel structure within building.

3.5 FIELD QUALITY CONTROL

A. Inspection of work

1. Working parts shall be readily accessible for inspection, repair and renewal. The right is reserved to make reasonable changes in equipment location shown on Drawings prior to rough in without additional costs to the Owner.

2. During construction all work will be subject to observation by the Engineer and his representatives. Assist in ascertaining any information that maybe required.

3. Do not allow or cause any work installed hereunder to be covered up or enclosed before it has been inspected and approved. Should any work be enclosed or covered prior to approval, uncover work, and after it has been inspected and approved, restore work of all others to the condition in which it was found at the time of cutting, all without additional costs to Owner.

B. Furnish all testing equipment as maybe required.

C. Test all wiring and connections for continuity and grounds; where such test indicates faulty insulation or other defects, locate, repair and re-test.

D. Check rotation of all motors and correct if necessary.

3.6 CLEANING

A. Repair or replace all broken, damaged or otherwise defective parts without additional cost to Owner, and leave entire work in a condition satisfactory to Engineer. At completion, carefully clean and adjust all equipment, fixtures and trim installed as part of this work; leave systems and equipment in satisfactory operating condition.

B. Clean out and remove from the site all surplus materials and debris resulting from this work; this includes surplus excavated materials.

3.7 DEMONSTRATION

A. At project completion, Contractor shall allot a period of not less than 8 hours for instruction of operating and maintenance personnel in the use of all systems installed under this Section. This time is in addition to any instruction time stated in the Specifications of other sections for other equipment, i.e., fire alarm, security, intercom, etc. All personnel shall be instructed at one time, the Contractor shall make all necessary arrangements with manufacturer's representatives as may be required. Contractor, if any, for the above services shall pay all costs.

3.8 PROTECTION

A. In performance of work, protect work of other trades as well as work under this Section from damage. Protect electrical equipment, stored and installed, from dust, water or other damage.

END OF SECTION

CONFORMED

SECTION 26 05 19

LOW-VOLTAGE POWER CONDUCTORS AND CABLES

PART 1 - GENERAL

1.1 SUMMARY

A. Section includes

1. Provide all labor, materials and equipment necessary for the installation of all conductors and cables under this Section related to lighting, power, mechanical, control, and signal systems.

B. Related sections

1. Where items specified in other Division 26 sections conflict with the requirements of this Section, the most stringent requirement shall govern.
2. The requirements of this Section apply to all Division 26 work, as applicable.
3. Consult all other sections, determine the extent and character of related work and properly coordinate work specified herein with that specified elsewhere to produce a complete installation.

1.2 REFERENCES

A. Comply with the latest edition of the following applicable specifications and standards except as otherwise shown or specified:

1. ASTM -American Society for Testing and Materials
   a. B3; Standard Specification for Soft or Annealed Copper Wire
   b. B8; Standard Specification for Concentric-Lay-Stranded Copper Conductors, Hard, Medium-Hard, or Soft
   c. B787/B787M; Standard Specification for 19 Wire Combination Unilay-Stranded Copper Conductors for Subsequent Insulation
   d. D1000; Standard Test Method for Pressure-Sensitive Adhesive-Coated Tapes Used for Electrical and Electronic Applications
2. CCR –California Code of Regulations, Title 24
   a. Part 3 -California Electrical Code(CEC); NFPA 70 National Electrical Code (NEC) with California amendments
3. UL -Underwriters Laboratories, Inc.
   a. UL 83; Thermoplastic-Insulated Wire and Cables
   b. UL 486A 486B; Wire Connectors
   c. UL 486C; Splicing Wire Connectors
   d. UL 486D; Standard for Insulated Wire Connector Systems For Underground Use Or In Damp Or Wet Locations
   e. UL 486E; Standard for Equipment Wiring Terminals for Use with Aluminum and/or Copper Conductors
   f. UL 493; Thermoplastic-Insulated Underground Feeders and Branch Circuit Cables
   g. UL 510; Standard for Polyvinyl Chloride, Polyethylene and Rubber Insulating Tape
   h. UL 854; Service-Entrance Cables
4. NEMA –National Electrical Manufacturer’s Association
   a. WC 70-1999; Nonshielded Power Cables Rated 2000 Volts or less for the Distribution of Electrical Energy
5. IEEE –Institute of Electrical and Electronic Engineers

a. 82; Standard Test Procedure for Impulse Voltage Tests on Insulated Conductors

1.3 SUBMITTALS

A. Submit manufacturer's data for equipment and materials specified within this Section in accordance to Section 26 05 00.

1.4 DELIVERY

A. Wire shall be in original unbroken package. Obtain approval of Inspector or Engineer before installation of wires.

PART 2 -PRODUCTS

2.1 BUILDING WIRE

A. Conductor material

1. Provide annealed copper for all wire, conductor and cable of not less than 98% conductivity.
2. Wire #8 AWG and larger shall be stranded.
3. Wire #10 AWG and smaller shall be solid.

B. Insulation material

1. All insulated wire, conductor and cable shall be 600 Vac rated.
2. Feeder and branch circuits larger than #6 AWG shall be type THW, XHHW or THHN/THWN.
3. Feeder and branch circuits #6 AWG and smaller shall be type TW, THW, XHHW or THHN/THWN.
4. Control circuits shall be type THW or THHN/THWN.
5. Wires shall bear the UL label, be color-coded and marked with gauge, type and manufacturer's name on 24" centers.

2.2 METAL-CLAD CABLE (MC CABLE)

A. MC cable shall be an armored assembly of two or more dual rated THHN/THWN conductors and a full sized green insulated grounding conductor.

B. MC cable shall be fabricated in continuous lengths from galvanized steel strip, spirally would and formed to provide an interlocking design.

C. Fitting connectors shall be of the single screw clamp variety with steel or cast malleable iron bodies and threaded male hubs with insulated throats. Fittings shall be UL listed for use with MC cable type specified.

2.3 FLEXIBLE CORDS AND CABLES

A. Provide flexible cords and cables of size, type and arrangement as indicated on Drawings.

B. Type S flexible cords and cable shall be manufactured in accordance with NEC Article 400 and composed of two or more conductors and a full sized green insulated grounding conductor with an outer rubber or neoprene jacket.

C. Flexible cords and cables shall be fitted with wire mesh strain relief grips either as an integral connector component or an independently supported unit.

D. Suspended flexible cords and cables shall incorporate safety spring(s).

2.4 WIRE CONNECTIONS AND TERMINATIONS

A. Electrical spring wire connectors

1. Provide multi-part construction incorporating a non-restricted, zinc coated square cross-sectional steel spring enclosed in a steel sheet with an outer jacket of plastic and insulating skirt.
2. Self-striping pigtail and tap U-contact connectors are not acceptable.

B. Compression type terminating lugs

1. Provide tin-plated copper high compression type lugs for installation with hand or hydraulic crimping tools as directed by manufacturer. Notch or single point type crimps are not acceptable.
2. Two hole, long barrel lugs shall be provided for size #4/O AWG and larger wire where terminated to bus bars. Use minimum of three crimps per lug where possible.

C. Splicing and insulating tape

1. Provide black, UV resistant, self extinguishing, 7 mil thick vinyl general purpose electrical tape per UL 510 and ASTM D1000. 3M Scotch 33 or equal.

D. Insulating putty

1. Provide pads or rolls of non-corrosive, self-fusing, 125 mil thick rubber putty with PVC backing sheet per UL 510 and ASTM D1000. 3M Scotchfil or equal.

E. Insulating resin

1. Provide two-part liquid epoxy resin with resin and catalyst in pre-measured, sealed mixing pouch. 3M Scotchcast 4 or equal.
2. Use resin with thermal and diaelectric properties equal to the cable's insulating properties.

F. Terminal strips

1. Provide box type terminal strips in the required quantities plus 25% spare. Install in continuous rows.
2. Use the box type terminal strips with barrier open backs and with ampere ratings as required.
3. Identify all terminals strips and circuits.

G. Crimp type connectors

1. Provide insulated fork or ring crimp terminals with tinned electrolytic copper-brazed barrel with funnel wire entry and insulation support.
2. Fasten crimp type connectors or terminals using a crimping tool recommended by the manufacturer.
3. Provide insulated overlap splices with tinned seamless electrolytic copper-brazed barrel with funnel wire entry and insulation support.
4. Provide insulated butt splices with tinned seamless electrolytic copper-brazed barrel with center stop, funnel wire entry and insulation support.

H. Cable ties

1. Provide harnessing and point-to-point wire bundling with nylon cable ties. Install using tool supplied by manufacturer as required.

I. Wire lubricating compound

1. UL listed for the wire insulation and conduit type, and shall not harden or become adhesive.
2. Shall not be used on wire for isolated type electrical power systems.

J. Bolt termination hardware

1. Bolts shall be plated, medium carbon steel heat-treated, quenched and tempered equal to ASTM A-325 or SAE Grade 5; or silicon bronze alloy ASTM B-9954 Type B.
2. Nuts shall be heavy semi-finished hexagon, conforming to ANSI B18.2.2, threads to be unified coarse series (UNC), class 2B steel or silicon bronze alloy.
3. Flat washers shall be steel or silicon bronze, Type A plain standard wide series, conforming to ANSI B27.2. SAE or narrow series shall be used.
4. Belleville conical spring washers shall be hardened steel, cadmium plated or silicon bronze.

5. Each bolt connecting lug(s) to a terminal or bus shall not carry current exceeding the following values:
    a. 1/4” bolt – 125 A
    b. 5/16” bolt – 175 A
    c. 3/8” bolt – 225 A
    d. 1/2” bolt – 300 A
    e. 5/8” bolt – 375 A
    f. 3/4” bolt – 450 A

2.5 MANUFACTURED WIRING SYSTEM (MWS)

A. Manufacturer shall be American Cable System or approved equal.

B. The MWS shall be complete, including all tap boxes, cable sets, tap cables, lighting fixture adapter assemblies and all accessories.

C. The system shall be constructed such that all system components will be metal encased, forming a fully grounded system. All spare and unused connectors in the system shall be covered with caps provided for the purpose. System shall be UL listed for use within plenums and spaces used for environmental air.

D. Cable assembly

1. All cables shall have factory pre-wired connectors. Cable sets shall have a power-in connector on one end and a power-out connector on the opposite end. Tap cables shall have a power-in connector on one end and 6” pigtail leads on the opposite end for field termination with transition and switch boxes.
2. Each cable shall have a positive means to engage the connectors in system components such as distribution boxes, tap boxes and lighting fixtures.
3. The cable shall be clearly marked and color-coded for designation of service and voltage.
4. Line voltage branch circuit cable sets shall have #12 AWG minimum copper conductors rated at 600 Vac, plus fully rated equipment grounding conductor within a galvanized steel armor interlocking sheath**.**

E. Connectors

1. The connectors shall be polarized that only units of the same service, voltage and function can be physically mated and electrically connected.

F. Adapter assemblies (Lighting fixture)

1. The MWS manufacturer shall furnish adapter assemblies directly to the light fixture manufacturer for installation in all fixtures to be connected to this system.
2. Lighting fixtures shall be factory pre-wired with manufactured wiring system assemblies furnished under this Section and shall be shipped to the job site ready for installation.
3. Adapter assemblies shall be manufactured such that the adapter uses the standard fixture’s knockouts.
4. Adapter assemblies shall be UL listed components. The manufacturers shall be responsible for obtaining UL listed for the entire assembly.

G. Tap boxes

1. All tap boxes shall be complete with provisions for interface unit, conduit entry and mounting.
2. All box connectors (interface units) shall be pre-wired with color coded #12 AWG, 600 Vac phase, neutral and equipment grounding conductors.
3. Interface units shall be power-out type, uniquely polarized for service and function. The connector shall receive the cable heads by a positive means.

PART 3 -EXECUTION

3.1 EXAMINATION

A. Thoroughly examine site conditions for acceptance of wire and cable installation to verify conformance with manufacturer and specification tolerances. Do not commence with work until all conditions are made satisfactory.

3.2 INSTALLATION

A. All wire, conductor, and cable with their respective connectors, fittings and supports shall be UL listed for the installed application and ambient conditions.

B. Feeders and branch circuits in wet locations shall be rated 75°C minimum.

C. Feeders and branch circuits in dry locations shall be rated 90°C minimum.

D. Minimum conductor size

1. #12 AWG copper for all power and lighting branch circuits.
2. #14 AWG copper for all line voltage signal and control wiring, unless otherwise indicated.
3. Aluminum conductors may be substituted on the basis of equal performance for sizes greater than #10 AWG with the approval of Engineer.

E. Remove and replace conductors under the following conditions at no additional costs to the Owner:

1. Installed within wrong specified conduit or raceway.
2. Damaged during installation.
3. Of insufficient length to facilitate proper splice of conductors

3.3 WIRING METHODS

A. Install wires and cable in accordance with manufacturer's written instructions, as shown on Drawings and as specified herein.

B. Install all single conductors within raceway system, unless otherwise indicated.

C. Parallel circuit conductors and terminations shall be equal in length and identical in all aspects.

D. Provide adequate length of conductors within electrical enclosures and neatly train to termination points with no excess. Terminate such that there is no bare conductor at the terminal.

E. Splice cables and wires only in junction boxes, outlet boxes, pull boxes, manholes or handholes.

F. Group and bundle with tie wrap each neutral with its associated phase conductors where more than one neutral conductor is present within a conduit.

G. Install cable supports for all vertical feeders in accordance with NEC Article 300. Provide split wedge type fittings, which firmly clamp each individual cable and tighten due to cable weight.

H. Seal cable where exiting a conduit from an exterior underground raceway with a non-hardening compound (i.e., duct seal or equal).

I. Provide UL listed factory fabricated, solder-less metal connectors of size, ampacity rating, material, type and class for applications and for services indicated. Use connectors with temperature ratings equal or greater than the conductor or cable being terminated.

J. Stranded wire shall be terminated using fittings, lugs or devices listed for the application. Under no circumstances shall stranded wire be terminated solely by wrapping it around a screw or bolt.

K. Flexible cords and cables supplied as part of a pre-manufactured assembly shall be installed according to manufacturer's published instructions.

3.4 WIRING INSTALLATION IN RACEWAYS

A. Install wire in raceway after interior of building has been physically protected from weather, and all mechanical work likely to injure conductors has been completed.

B. Pull all conductors into raceway at the same time.

C. Use UL listed, non-petroleum base and insulating type pulling compound as needed.

D. Completely mandrel all underground or concrete encased conduits prior to installation.

E. Completely and thoroughly swab raceway system prior to installation

F. Do not use block and tackle, power driven winch or other mechanical means for pulling conductors smaller than #1 AWG.

G. Wire pulling

1. Provide installation equipment that will prevent cutting or abrasion of insulation during installation.
2. Maximum pull tension shall not exceed manufacturer's recommended value during installation for cable being measured with tension dynometer.
3. Use rope made of non-metallic material for pulling.
4. Attach pulling lines by means of either woven basket grips or pulling eyes attached directly to the conductors.
5. Pull multiple conductors simultaneously within same conduit.

3.5 MC CABLE INSTALLATION

A. MC cable shall be installed where clearly indicated on Drawings or with explicit, written permission by Engineer or Owner.

B. Install MC cable in accordance with manufacturer's instructions and NEC Article 334. Follow manufacturer's instruction when connecting the cable to fittings and boxes. Connectors and boxes shall be firmly secured to the cable, but not over-tightened.

C. Support cable every 6 feet and with 12 inches of boxes per NEC Article 334 using separate spring clip or metal cable ties (not steel tie wire) for each cable. Do not bundle cables together.

D. Install separate drop wires above accessible, tile ceilings.

E. Do not rest cables on ceiling tiles or allow contact with metal piping systems.

F. Provide separate sleeves and/or fire barriers where cables penetrate firewalls, unless cable is UL listed for the application.

3.6 MANUFACTURED WIRING SYSTEM (MWS) INSTALLATION

A. MWS shall be installed where clearly indicated on Drawings or with explicit, written permission by Engineer or Owner.

B. Install MWS in accordance with manufacturer's instructions and NEC Article 334.

C. System shall be furnished complete with all accessories and hardware required for a completely operational system.

D. Support cable every 6 feet and with 12 inches of boxes per NEC Article 334 using separate spring clip or metal cable ties (not steel tie wire) for each cable. Do not bundle cables together.

E. Provide supports for all system boxes per the requirements of this Division.

F. Install separate drop wires above accessible, tile ceilings.

G. Do not rest cables on ceiling tiles or allow contact with metal piping systems.

H. Where switches are shown in areas using MWS, provide the following:

1. Provide conduit and all necessary conductors from the switch location to a MWS tap box.
2. MWS tap box shall be located above accessible ceiling near switches or controlled lighting fixtures.

I. Mark each connector, cable and box with circuit number(s) being supplied.

3.7 WIRE SPLICES, JOINTS AND TERMINATIONS

A. Join and terminate wire, conductors and cables in accordance with UL 486, NEC and manufacturer's instructions.

B. Thoroughly clean wires before installing lugs and connectors.

C. Make splices, taps and terminations to carry full conductor ampacity without perceptible temperature rise, and shall be made mechanically and electrically secure.

D. Terminate wires in terminal cabinets using terminal strips, unless otherwise indicated.

E. Insulate spare conductors with electrical tape and leave sufficient length to terminate anywhere within panel or cabinet.

F. Encapsulate splices in wet locations using specified insulating resin kits.

G. Make up all splices and taps in accessible junction or outlet boxes with connectors as specified herein. Pigtails and taps shall be the same color as feed conductor with at least 6 inches of tail, all neatly packed within box.

H. Where conductors are to be connected to metallic surfaces, coated surfaces shall be cleaned to base metal surface before installing connector. Remove lacquer coating of conduits where ground clamps are to be installed.

I. Branch circuits (#10 AWG and smaller) connectors shall comply with 2.01.D.2 and 2.01.D.2 above.

J. Branch circuits (#8 AWG and larger)

1. Join or tap conductors using insulated mechanical compression taps with pre-molded, snap-on insulating boots or specified conformable insulating pad and over-wrapped with two half-lapped layers of vinyl insulating tape starting and ending at the middle of joint.

2. Terminate conductors using mechanical compression lugs in accordance with manufacturer's recommendation or as specified elsewhere.

3. Field installed compression connectors for 250 MCM and larger shall have not less than two clamping elements or compression indents per wire.

4. Insulate splices and joints with materials approved for the particular use, location, voltage and temperature.

K. Termination hardware assemblies

1. Al/Cu lugs connected to aluminum plated or copper bus shall be secured with steel bolt, flat washer (two per bolt), Belleville washer and nut.

2. Copper lugs connected to copper buss shall bus shall be secured using silicon bronze alloy bolt, flat washer (two per bolt), Belleville washer and nut.

3. The crown of Belleville washers shall be under the nut.

4. Bolt assemblies shall be torque to manufacturer's recommendations. Where manufacturer recommendation is not obtainable, the following shall be used:

a. 1/4" -20 bolt at 80 inch-pound torque

b. 5/16" -18 bolt at 180 inch-pound torque

c. 3/8" -20 bolt at 20 inch-pound torque

d. 1/2" -20 bolt at 40 inch-pound torque

e. 5/8" -20 bolt at 55 inch-pound torque

f. 3/4" -20 bolt at 158 inch-pound torque

3.8 IDENTIFICATION

A. Securely tag all branch circuits. Mark conductors with specified vinyl wrap-around markers. Where more than two conductors run through a single outlet, mark each conductor with the corresponding circuit number.

B. Provide all terminal strips with each individual terminal identified using specified vinyl markers.

C. In manholes, pullboxes and handholes provide tags of embossed brass type with cable type and voltage rating. Attach tags to cable with slip-free plastic cable lacing units.

D. Color coding

1. For 120/208 Volt (or 120/240 Volt), 1 phase, 3 wire systems:
   a. Phase A – Black
   b. Phase B – Red
   c. Neutral – White
   d. Ground – Green
2. For 120/208 Volt, 3 phase, 4 wire systems:
   a. Phase A – Black
   b. Phase B – Red
   c. Phase C – Blue
   d. Neutral – White
   e. Ground – Green
3. For 277/480 Volt, 3 phase, 4 wire systems:
   a. Phase A – Brown
   b. Phase B – Orange
   c. Phase C – Yellow
   d. Neutral – Gray
   e. Ground – Green
4. Switch leg individually installed shall be the same color as the branch circuit to which they originate, unless otherwise indicated.
5. Travelers for 3-way and 4-way switches shall be a distinct color and pulled with the circuit switch leg or neutral.

3.9 FIELD QUALITY CONTROL

A. Supply labor, materials and test equipment required to perform continuity and ground tests.

B. Electrical testing

1. Perform feeder and branch circuit insulation test after installation and prior to connection to device.
2. Tests shall be performed by 600 Vdc megger for a continuous 10 seconds from phase-to-phase and phase-to-ground.
3. Torque test conductor connections and terminations for conformance to Specifications.
4. If any failure is detected, locate failure, determine cause and replace or repair cable to Engineer's satisfaction at no additional costs.
5. Furnish test results in type written report form for review by Engineer.

END OF SECTION

CONFORMED

SECTION 26 05 26

GROUNDING AND BONDING FOR ELECTRICAL SYSTEMS

PART 1 - GENERAL

1.1 SUMMARY

A. Section includes

1. Provide all labor, materials and equipment necessary to complete the installation required for the item specified under this Section, including but not limited to power system grounding

B. Related sections

1. Where items specified in other Division 26 sections conflict with the requirements of this Section, the most stringent requirement shall govern.
2. The requirements of this Section apply to all Division 26 work, as applicable.
3. Consult all other sections, determine the extent and character of related work and properly coordinate work specified herein with that specified elsewhere to produce a complete installation.

1.2 REFERENCES

A. Comply with the latest edition of the following applicable specifications and standards except as otherwise shown or specified:

1. CCR –California Code of Regulations, Title 24
   a. Part 3 -California Electrical Code(CEC); NFPA 70 National Electrical Code (NEC) with California amendments
2. IEEE –Institute of Electrical and Electronic Engineers
   a. 142; Recommend Practices for Grounding of Industrial and Commercial Power Systems
3. NFPA –National Fire Protection Association
   a. 780; Lightning Protection Code
4. UL –Underwriters Laboratories, Inc.
   a. 467; Grounding and Bonding Equipment

1.3 SYSTEM DESCRIPTION

A. This Section provides for the grounding and bonding of all electrical and communication apparatus, machinery, appliances, components, fittings and accessories where required to provide a permanent, continuous, low impedance, grounded electrical system.

B. Ground the electrical service system neutral at service entrance equipment as shown on the Drawings.

C. Ground each separately derived system, as defined in CEC/NEC 250-5(d) and on the Drawings, unless specifically noted otherwise.

D. Except as otherwise indicated, the complete electrical installation including the neutral conductor, equipment and metallic raceways, boxes and cabinets shall be completely and effectively grounded in accordance with all CEC/NEC requirements, whether or not such connections are specifically shown or specified.

1.4 SUBMITTALS

A. Submit manufacturer's data for equipment and materials specified within this Section in accordance to Section 26 05 00.

1.5 QUALITY ASSURANCE

A. All materials, equipment and parts comprising the materials specified herein shall be new and unused, bearing UL labels where applicable.

PART 2 - PRODUCTS

2.1 CONCRETE ENCASED GROUNDING ELECTRODE (UFER GROUND)

A. #3/O AWG minimum bare stranded copper conductor.

2.2 DRIVEN (GROUND) RODS

A. Copper clad steel, minimum ¾" diameter by 10'-0" length, sectional type with copper alloy couplings and carbon steel driving stud; Weaver, Cadweld or equal.

2.3 INSULATED GROUNDING BUSHINGS

A. Plated malleable iron body with 150°C molded plastic insulated throat and lay-in ground lug; OZ/Gedney BLG, Thomas & Betts #TIGB series or equal.

2.4 CONNECTION TO PIPE

A. Cable to pipe connections; OZ/Gedney G-100B series, Thomas & Betts #290X series or equal.

2.5 CONNECTIONS TO STRUCTURAL STEEL, GROUND RODS OR SPICES

A. Where required by the Drawings, grounding conductors shall be spliced together, connected to ground rods or connected to structural steel using exothermic welds, Cadweld or equal, or high pressure compression type connectors, Cadweld, Thomas & Betts or equal.

2.6 BONDING JUMPERS

A. OZ/Gedney Type BJ, Thomas & Betts #3840 series or equal.

2.7 GROUND CONDUCTOR

A. Ground conductor shall be code size UL labeled, Type THWN insulated copper wire, green in color.

2.8 MAIN BUILDING REFERENCE GROUND BUS (BGB)

A. Provide 1 24"x4"x1/4" TK copper bus bar mounted on wall with insulating stand-offs at +18" AFF. Furnish complete with cast copper alloy body Thomas Betts Series 310 or equal lugs for connecting grounding conductors. Attach lugs to bus with appropriate size bronze bolt, flat washer and Belleville washer. All connections shall be torque, and all holes shall be drilled and tapped for single hole lugs. Provide 4 spare lugs with respective spaces.

PART 3 -EXECUTION

3.1 INSTALLATION

A. Grounding electrodes

1. Concrete encased grounding electrode (Ufer ground)

a. Provide a #3/O AWG minimum bare copper conductor encased along the bottom of concrete foundation, footing or trench which is in direct contact with the earth and where there is no impervious waterproofing membrane between the footing and soil. The electrode shall extend through a horizontal length of 30' minimum and shall be encased in not less than 2" or more than 5" of concrete separating it from surrounding soil. The electrode shall emerge

from the concrete slab through a protective non-metallic sleeve and shall be extended to BGB or as shown on Drawings.

2. Supplementary grounding electrode (ground ring, grid and driven rod)
    a. Provide as shown driven ground rod(s). Interconnect ground rod with structural steel and adjacent rods with code size bare copper conductor. Ground rods shall be space no less than 6'-0" on centers from any other electrode or electrodes of another electrical system.
3. Separately derived electrical system grounding electrode
    a. Ground each separately derived system per CEC/NEC 250-26 or as shown on Drawings, whichever is greater.
4. Metal underground water pipe
    a. Contractor shall install am accessible grounding electrode conductor from the main incoming cold water line to BGB. The electrode conductor shall be sized per CEC/NEC Table 250-94 or as shown on Drawings, whichever is greater.

B. Grounding electrode conductor
1. Provide grounding electrode conductors per CEC/NEC Table 250-94 or as shown on Drawings, whichever is greater.

C. Power system grounding
1. Connect the following items using code size copper grounding conductors to BGB or as shown on Drawings:
    a. Concrete encased electrode (Ufer ground)
    b. Ground rod(s)
    c. Incoming cold and fire water pipes
    d. Gas pipe
    e. Structural steel
    f. Distribution transformer secondary

D. Equipment Bonding/Grounding
1. Provide a code sized copper ground conductor, whether indicated or noted on the drawings, in each of the following:
    a. All power distribution conduits and ducts
    b. Distribution feeders
    c. Motor and equipment branch circuits\
    d. Device branch circuits
2. Provide a separate grounding bus at distribution panelboards, loadcenters, switchboards and motor control centers. Connect all metallic enclosed equipment so that with maximum fault current flowing, shall be maintained at not more than 35V above ground.
3. Metallic conduits terminating in concentric, eccentric or oversized knockouts at panelboards, cabinets, gutters, etc. shall have grounding bushings and bonding jumpers installed interconnecting all such conduits.
4. Provide bonding jumpers across expansion and deflection coupling in conduit runs, pipe connections to water meters and metallic cold water dielectric couplings.
5. Provide ground wire in flexible conduit connected at each end via grounding bushing.
6. Provide bonding jumpers across all cable tray joints.
7. Bond each end of metallic conduit longer than 36" in length to grounding conductor using a #6 AWG pigtail.

3.2 FIELD QUALITY CONTROL

A. Contractor using test equipment expressly designed for that purpose shall perform all ground resistance tests in conformance with IEEE quidelines. Contractor shall submit typewritten records of measured resistance values to Engineer for review and approval prior to energizing the system.

B. Obtain and record ground resistance measurements both from electrical equipment ground bus to the ground electrode and from the ground electrode to earth. Furnish and install additional bonding and add grounding electrodes as required to comply with the following resistance limits:

   1. Resistance from ground bus to ground electrode and to earth shall not exceed 5 ohms unless otherwise noted.

   2. Resistance from the farthest panelboard, loadcenter, switchboard or motor control center ground bus to the ground electrode and to earth shall not exceed 20 ohms maximum.

C. Inspection

   1. The Engineer or Inspector prior to encasement, burial or concealment thereto shall review the grounding electrode and connections.

END OF SECTION

CONFORMED

SECTION 26 05 33

RACEWAYS AND BOXES

PART 1 - GENERAL

1.1 SUMMARY

A. Section includes

1. Provide all labor, materials and equipment necessary to complete the installation required for the items specified under this Section, including but not limited to electrical conduits; outlet, junction and pull boxes; and related supports.

B. Related sections

1. Where items specified in other Division 26 sections conflict with the requirements of this Section, the most stringent requirement shall govern.
    a. 26 05 26 – Grounding and Bonding for Electrical Systems
2. The requirements of this Section apply to all Division 26 work, as applicable.
3. Consult all other sections, determine the extent and character of related work and properly coordinate work specified herein with that specified elsewhere to produce a complete installation.

1.2 REFERENCES

A. Comply with the latest edition of the following applicable specifications and standards except as otherwise shown or specified:

1. ANSI –American National Standards Institute
    a. C33.91; Specification for Rigid PVC Conduit
    b. C80.1; Specification Rigid Steel Conduit, Zinc-Coated
    c. C80.3; Specification for Electrical Metallic Tubing, Zinc-Coated
    d. C80.6; Intermediate Metal Conduit (IMC), Zinc-Coated
2. CCR –California Code of Regulations, Title 24
    a. Part 2 -California Building Code (CBC); ICBO Uniform Building Code (UBC) with California amendments
    b. Part 3 -California Electrical Code(CEC); NFPA 70 National Electrical Code (NEC) with California amendments
3. NECA –National Electrical Contractors Association
    a. 101, Standard for Installing Steel Conduit (Rigid, IMC, EMT)
    b. 111, Standard for Installing Nonmetallic Raceways (RNC, ENT, LFNC) (ANSI)
4. NEMA –National Electrical Manufacturer’s Association
    a. FB 1; Fittings, Cast Metal Boxes, and Conduit Bodies for Conduit, Electrical Metallic Tubing, and Cable
    b. FB 2.10; Selection and Installation Guidelines for Fittings for Use with Non-flexible Electrical Metal Conduit or Tubing (Rigid Metal Conduit, Intermediate Metal Conduit, and Electrical Metallic Tubing)
    c. FB 2.20; Selection and Installation Guidelines For Fittings for Use With Flexible Electrical Conduit and Cable
    d. OS 1; Sheet-Steel Outlet Boxes, Device Boxes, Covers, and Box Supports
    e. OS 3; Selection and Installation Guidelines for Electrical Outlet Boxes

f. RN 1; Polyvinyl-Chloride Externally Coated Galvanized Rigid Steel Conduit and Electrical Metallic Tubing

g. TC 2; Electrical Plastic Tubing and Conduit

h. TC 3; PVC Fittings for Use with Rigid PVC Conduit and Tubing

i. TC 14; Reinforced Thermosetting Resin Conduit (RTRC) and Fittings

5. OSHPD Anchorage Pre-approvals

a. OPA-0003; Superstrut Seismic Restraint System

b. OPA-0114; B-Line Seismic Restraints

c. OPA-0120; Unistrut Seismic Bracing System

d. OPA-0242; Power-Strut Seismic Bracing System

6. UL –Underwriter's Laboratories, Inc.

a. 1; Standard for Flexible Metal Conduit

b. 6; Rigid Metal Electrical Conduit

c. 360; Standard for Liquid-Tight Flexible Steel Conduit

d. 514A; Metallic Outlet Boxes, Electrical

e. 514B; Fittings for Conduit and Outlet Boxes

f. 651; Schedule 40 & 80 PVC Conduit

g. 797; Electrical Metallic Tubing

h. 1242; Intermediate Metal Conduit

i. 1684; Reinforced Thermosetting Resin Conduit (RTRC) and Fittings

1.3 SYSTEM DESCRIPTION

A. Furnish, assemble, erect, install, connect and test all electrical conduits and related raceway apparatus required and specified to form a complete installation.

1.4 SUBMITTALS

A. Submit manufacturer's data for materials specified within this Section in accordance to Section 26 05 00.

1.5 QUALITY ASSURANCE

A. All materials, equipment and parts comprising the materials specified herein shall be new and unused, bearing UL labels where applicable.

B. Installation shall conform to the NECA installation guidelines unless otherwise indicated within this Section

PART 2 -PRODUCTS

2.1 MATERIALS

A. Conduits and Fittings

1. Rigid steel conduit (RMC)

a. Conduit: Standard weight, mild steel pipe, and zinc coated on both inside and outside by a hot dipping or shearardizing process manufactured in accordance with UL 6 and ANSI C80.1 specifications.

b. Fittings (couplings, elbows, bends, etc.)

1) Shall be steel or malleable iron.

2) Coupling and unions shall be threaded type, assembled with anti-corrosion, conductive and anti-seize compound at joints made absolutely tight to exclude water.

c. Bushings

1) Insulating bushings: Threaded polypropylene or thermosetting phenolic rated at 150°C minimum.

2) Insulating grounding bushing: Threaded cast body with insulating throat and steel “lay-in” ground lug.

3) Insulating metallic bushing: Threaded cast body with plastic insulated throat rated at 150°C minimum.

2. Coated rigid steel conduit (CRMC)

a. Conduit: Equivalent to RMC with a Polyvinyl chloride (PVC) coated bonded to the galvanized outer surface of the conduit. The bonding between the PVC coating and conduit surface shall be ETL PVC-001 compliant. The coating thickness shall be a minimum of 40mil.

b. Fittings (couplings, elbows, bends, etc.)

1) Equivalent to RMC above with bonded coating same as conduit.

2) The PVC sleeve over fittings shall extend beyond hub or coupling approximately one diameter or 1 1/2” whichever is smaller.

c. Bushing equivalent to RMC above.

3. Intermediate metallic conduit(IMC)

a. Conduit: Intermediate weight, mild steel pipe, meeting the same requirements for finish and material as rigid steel conduit manufactured in accordance with UL 1242 and ANSI C80.6 specifications

b. Fittings (couplings, elbows, bends, etc.) equivalent to RMC above.

c. Bushing equivalent to RMC above.

4. Electrical metallic tubing (EMT)

a. Conduit: Cold rolled steel tubing with zinc coating on outside and protective enamel on inside manufactured in accordance with UL 797 and ANSI C80.3 specifications.

b. Couplings: Steel or malleable iron with compression type fastener via a nut.

c. Connectors: Steel or malleable iron with compression type fastener via a nut with plastic insulated throat rated at 150°C minimum.

5. Rigid non-metallic conduit (PVC)

a. Conduit: PVC composed Schedule 40, 90°C manufactured in accordance with NEMA TC 2 and UL 651 specifications.

b. Fittings: Molded PVC, slip on solvent welded type in accordance to NEMA TC 3.

6. Reinforced thermosetting resin conduit (RTRC)

a. Conduit: Fiber impregnated with a cured thermosetting resin compound in accordance with NEMA TC 14 and UL1684.

b. Fittings: Molded resin with glass reinforcement manufactured in the same process as the conduit bonded with an epoxy adhesive.

7. Flexible metallic conduit (FMC)

a. Conduit: Continuous, flexible steel spirally wound with zinc coating on both inside and outside in accordance with UL 1.

b. Connectors: Steel or malleable iron with compression type fastener via a nut with plastic insulated throat rated at 150°C minimum.

8. Liquidtight flexible metallic conduit (LFMC)
    a. Conduit: PVC coated, continuous, flexible steel spirally wound with zinc coating on both inside and outside in accordance with UL 360.
    b. Connectors: Steel or malleable iron with compression type fastener via a nut with plastic insulated throat rated at 150°C minimum.
9. Miscellaneous Fittings and Products
    a. Conduit sealing bushings: Steel or cast malleable iron body and pressure clamps with PVC sleeve, neoprene sealing grommets and PVC coated steel pressure rings. Supplied with neoprene sealing rings between body and PVC sleeve.
    b. Watertight cable terminators: One piece, compression molded sealing ring with PVC coated steel pressure disks, stainless steel screws and zinc plated cast iron locking collar.
    c. Watertight cable/cord connectors: Liquidtight steel or cast malleable iron body with sealing neoprene bushing and stainless steel retaining ring.
    d. Expansion fittings: Multi-piece unit of hot dip galvanized malleable iron or steel body and outside pressure bussing design to allow a maximum of 4” movement (2” in either direction). Furnish with external braid tinned copper bonding jumper. UL listed for both wet and dry locations.
    e. Expansion/deflection couplings: Multi-piece unit comprised of a neoprene sleeve, internal flexible tinned copper braid attached to bronze end couplings with stainless steel bands. Coupling to provide minimum of 3/4” movement and 30 degrees deflection from normal. UL listed for both wet and dry locations.
    f. Conduit bodies: Raintight, malleable iron, hot-dip galvanized body with threaded hubs, stamped steel cover, stainless steel screws and neoprene gasket.
    g. Other couplings, connectors and fittings shall be equal in quality, material and construction to items specified herein.

B. Boxes
1. Outlet boxes
    a. Standard: Galvanized one-piece of welded pressed steel type in accordance with NEMA OS 1 and UL 514. Boxes shall not be less than 4” square and at least 1 1/2” deep.
    b. Concrete: Galvanized steel, 4” octagon ring with mounting lug, backplate and adapter ring type in accordance with NEMA OS 1 and UL 514. Depth as required by application.
    c. Masonry: Galvanized steel, 3.75” high gang box in accordance with NEMA OS 1 and UL 514.
    d. Surface cast metal: Cast malleable iron body, surface mounted box with threaded hubs and mounting lugs as required in accordance with NEMA OS 1 and UL 514. Furnish with ground flange, steel cover and neoprene gasket.
2. Pull and junction boxes
    a. Sheet metal boxes: Standard or concrete outlet box wherever possible; otherwise use 16 gauge galvanized sheet metal, NEMA 1 box sized per CEC with machine screwed cover.
    b. Cast metal boxes: Install standard cast malleable iron outlet or device box when possible.
    c. Flush mounted boxes: Install overlapping cover with flush head screws.
    d. In-ground mounted pull holes/boxes: Install pre-cast concrete box, sized per Drawing or CEC with pre-cast or traffic rated lid.
3. Floor boxes
    a. Floor boxes shall be adjustable, cast metal body with threaded conduit openings, adjustable rings, brass flange or Lexan ring and cover plate with threaded plug. Include provisions to accommodate surface mounted telephone or receptacle outlet, or flush floor mounted telephone or receptacle outlet where shown on Drawings.

C. Pull line/cord

1. Polypropylene braided line or Let-line #232 or equal of 1/8” diameter with a minimum break strength of 200 pounds.

PART 3 -EXECUTION

3.1 EXAMINATION

A. Thoroughly examine site conditions for acceptance of wire and cable installation to verify conformance with manufacturer and specification tolerances. Do not commence with work until all conditions are made satisfactory.

3.2 PREPARATION

A. Conduit

1. Provide all necessary conduit fittings, connectors, bushings, etc. required to complete conduit installation to meet the CEC/NEC and intended application whether noted, shown or specified within.
2. Location of conduit runs shall be planned in advance of the installation and coordinated with other trades.
3. Where practical, install conduits in groups in parallel vertical or horizontal runs that avoid unnecessary offsets.
4. All conduits shall be parallel or at right angles to columns, beams and walls whether exposed or concealed.
5. Conduits shall not be placed closer than 12” to a flue, parallel to hot water, steam line or other heat sources; or 3” when crossing perpendicular to the above said lines when possible.
6. Install exposed conduit as high as practical to maintain adequate headroom. Notify Engineer if headroom will be less than 102”.
7. Do not obstruct spaces required by Code in front of electrical equipment, access doors, etc.
8. The largest trade size conduit in concrete floors and walls shall not exceed 1/3 thickness or be spaced a less than three conduit diameters apart unless permitted by Engineer. All conduits shall be installed in the center of slab or wall, and never between reinforcing steel and bottom of floor slab.
9. Install additional pull boxes, not shown on Drawings, in sufficient quantities to facilitate pulling of conductors and cables such that total spacing does not exceed 150 feet or 270 degrees, total; and maximum pulling tension will not be exceeded.
10. When installing underground conduits to specified depth; depth shall be taken from finished grade as it will be at project completion. Should finish grade be above existing grade by an amount equal to or greater than specified depth, conduit shall be installed not less than 6” below existing grade.
11. Verify that information concerning finish grade is accurate, for should the underground run be less than the specified depth, Contractor may be required to re-install conduit to meet the required depth.
12. Unless otherwise specified, underground conduits shall be installed with top side not less than 24” below finished grade; this depth applies to all conduits outside of building foundations including those under walks, open corridors or paved areas.
13. Utility company service conduits installation depth shall be as directed by their respective specifications and requirements.

B. Boxes

1. Before locating outlet boxes, check Construction Documents for type of construction and make sure that there is no conflict with other equipment. Locate outlet boxes as shown and locate so as not to interfere with other Work or equipment.

2. Install all outlet boxes flush within walls, ceiling and floors except where installed within non-finished rooms, cabinetry, attic spaces or as indicated on Drawings.
3. Locate pull boxes and junction boxes within concealed, accessible locations where possible.
4. Do not install outlet boxes back-to-back with same stud space. Where shown back-to-back, offset as required, and fill void with sound dampening material where requested by Owner.
5. In fire rated walls separate boxes by 24" minimum and with stud member.
6. Adjust position of outlet boxes within masonry wall to accommodate course lines.

3.3 INSTALLATION

A. Conduit

1. Minimum conduit size shall be 3/4" unless otherwise indicated.
2. All conduit work shall be concealed unless otherwise indicated. Exposed conduits shall be permitted within unfinished rooms/spaces to facilitate installation.
3. Install conduit in complete runs prior to installing conductors or cables.
4. Make long radius conduits bends free from kink, indentations or flattened surfaces. Make bends carefully to avoid injury or flattening. Bends 1 1/4" size and larger shall be factory made ells, or be made with a manufactured mechanical bender. Heating of steel conduit to facilitate bending or that damage galvanized coating will not be permitted.
5. Remove burrs and sharp edges at end of conduit with tapered reamer.
6. Protect and cover conduits during construction with metallic bushings and bushing "pennies" to seal exposed openings.
7. Assemble conduit threads with anti-corrosion, conductive, anti-seize compound and tighten securely.
8. Install conduits shall that no traps to collect condensation exist.
9. Fasten conduit securely to boxes with locknuts and bushings to provide good grounding continuity.
10. Install pull cords/line within any spare or unused conduits of sufficient length to facilitate future cable installation.
11. Penetrations
    a. Locate penetrations within structural members as shown on Drawings and as directed by Architect or Engineer. Should it be necessary to notch any framing member, make such notching only at locations and in a manner as approved by Engineer.
    b. Do not chase concrete or masonry to install conduit unless specifically approved by Engineer.
    c. Cutting or holes
        1) Install sleeves for cast-in-place concrete floors and walls. After installing conduit through penetration, seal using dry-pack grouting compound (non-iron bearing, chloride free and non-shrinking) or fire rated assembly if rated floor or wall. Use escutcheon plate on floor underside to contain compound as necessary.
        2) Cut holes with a hole saw for penetrations through non-concrete or non-masonry members.
        3) Provide chrome plated escutcheon plates at all publicly exposed wall, ceiling and floor penetrations.
    d. Sealing
        1) Non-rated penetration openings shall be packed with non-flammable insulating material and sealed with gypsum wallboard taping compound.
        2) Fire rated penetration shall be sealed using a UL classified fire stop assembly suitable to maintain the equivalent fire rating prior to the penetration.

3) Use escutcheon plates to hold sealing or fire rated compound as necessary.

e. Waterproofing

1) Make penetrations through any damp-proofed/waterproofed surfaces within damp/wet locations as such as to maintain integrity of surface.

2) Install specified watertight conduit entrance seals at all below grade wall and floor penetrations.

3) At roof penetrations furnish roof flashing, counter flashing and pitch-pockets compatible to roof assembly.

4) Where possible conduits that horizontally penetrate a waterproof membrane shall fall away from and below the penetration's exterior side.

5) Make penetrations through floors watertight with mastic, even when concealed within walls or furred spaces.

12. Supports

a. Conduits shall be support and braced per OSHPD pre-approved anchorage systems when those methods are implemented and installed.

b. Sizes of rods and cross channels shall be capable of supporting 4 times and 5 times actual load, respectively. Anchorage shall support the combined weight of conduit, hanger and conductors.

c. Support individual horizontal conduit 1 1/2" and smaller by means of 2 hole straps or individual hangers.

d. Galvanized iron hanger rods sizes 1/4" diameter and larger with spring steel fasteners, clips or clamps specifically design for that purpose for 1 1/2" conduits and larger.

e. Support multi-parallel horizontal conduits runs with trapeze type hangers consisting of 2 or more steel hanger rods, preformed cross channels, 'J' bolts, clamps, etc.

f. Support conduit to wood structures by means of bolts or lag screws in shear, to concrete by means of insert or expansion bolts and to brickwork by means of expansion bolts.

g. Support multi-parallel vertical conduits runs with galvanized Unistrut, Power-Strut or approved equal type supports anchored to wall. Where multi-floored conduits pass through floors, install riser clamps at each floor.

h. Maximum conduit support spacing shall be in accordance with NECA Standard of Installation:

1) Horizontal runs:

a) 3/4" and smaller at 60" on centers, unless building construction prohibits otherwise, then 84" on centers.

b) 1" and larger at 72" on centers, unless building construction prohibits otherwise or any other condition, then 120" on centers.

2) Vertical runs:

a) 3/4" and smaller @ 84" on centers.

b) 1" and 1 1/4" @ 96" on centers.

c) 1 1/2" and larger @ 120" on centers.

d) Any vertical condition such as shaftways and concealed locations for any sized conduit, 120" on centers.

i. Anchorage for RMC/IMC supports unless otherwise specified:

1) < 1" IMC/RMC = #10 bolt/screw.

2) 1" IMC/RMC = 1/4" bolt/screw.

3) 1 1/2" and 2" IMC/RMC = 3/8" bolt/screw.

4) 3" IMC/RMC, 4" EMT = 1/2" bolt/screw.

5) > 3”IMC/RMC = 5/8” bolt/screw.

j. Anchorage for EMT supports unless otherwise specified:

1) < 1 1/2” EMT = #10 bolt/screw.

2) 1 1/2” EMT = 1/4” bolt/screw.

3) 2, 2 1/2” and 3” EMT = 3/8” bolt/screw.

4) 4” EMT = 1/2” bolt/screw.

5) > 4”EMT = 5/8” bolt/screw.

B. Boxes

1. Install boxes as shown on Drawings and as required for splices, taps, wire pulling, equipment connections and Code compliance.
2. Install additional pull boxes, not shown on Drawings, in sufficient quantities to facilitate pulling of conductors and cables such that total spacing does not exceed 150 feet or 270 degrees, total; and maximum pulling tension will not be exceeded.
3. Install plaster rings on all outlet boxes in stud walls or in furred, suspended or exposed ceilings. Covers shall be of a depth suited for installation.
4. Provide gasketed cast metal cover plates where boxes are exposed in damp or wet locations
5. Install access door for boxes installed within concealed locations without access.
6. Install approved factory made knockout seal where knockouts are not present.
7. Refer to Architectural interior elevations and details shown for exact mounting heights of all electrical outlets. In general, locate outlets as shown or specific and complies with Americans with Disabilities Act:
   a. Convenience outlets: +18”AFF or +6” above counter or splash.
   b. Local switches: +48”AFF or +6” above counter or splash.
   c. Telecommunication outlets: +18”AFF or +48”AFF for wall telephone or intercom device.
   d. Verify all mounting heights with Architectural Drawings, and where heights are not suited for construction or finish please consult Engineer or Architect.
8. Use conduit bodies to facilitate pulling of conductor or cables or change conduit direction. Do not splice within conduit bodies.
9. Enclose pull box with additional rated gypsum board as necessary to maintain wall’s original fire rating.
10. Install galvanized steel coverplates on all open boxes within dry listed areas.
11. Install in-ground pull holes/boxes flush to grade finish at finished areas or 1” above finished landscaped grade. Seal all conduits terminating in pull hole/box watertight. Install and grout around bell ends where shown. Cover and lids shall be removable without damage to adjacent finish surfaces.
12. Support
    a. Accurately place boxes for finish, independently and securely supported by adequate blocking or manufacturer channel type heavy-duty box hangers for stud walls. Do not use nails to support boxes.
    b. Support boxes independent of conduit system.
    c. Mount boxes installed within ceilings to 16 gauge metal channel bars attached to main runners or joists.
    d. Support boxes within suspended acoustical tile ceilings directly from structure above when light fixture are to be installed from box.
    e. Use auxiliary plates, bar or clips and grouted in place for masonry, block or pour-in-place concrete construction.

3.4 APPLICATION

A. Conduit

1. RMC/IMC suitable for all damp, dry and wet locations except when in contact with earth. IMC not suitable for hazardous locations as stated within CEC/NEC.
2. CRMC suitable for damp or wet locations, concealed within concrete or in contact with earth.
3. EMT suitable for exposed or concealed dry, interior locations.
4. PVC/RTRC suitable for beneath ground floor slab, except when penetrating, and direct earth burial. Do not run exposed within concrete walls or in floor slab unless indicated on Drawings or per Engineer's permission.
5. FMC suitable for dry locations only for connections to motors, transformers, vibrating equipment/machinery, controllers, valves, switches and light fixtures in less than 6 foot lengths.
6. LFMC application same as FMC above but for damp or wet locations.

B. Termination and joints

1. Use raceway fittings compatible with associated raceway and suitable for the location.
2. Raceways shall be joined using specified couplings or transitions where dissimilar raceway systems are joined.
3. Conduits shall be securely fastened to cabinets, boxes and gutters using (2) two locknuts and insulating bushing or specified insulated connector. Where joints cannot be made tight and terminations are subject to vibration, use bonding jumpers, bonding bushings or wedges to provide electrical continuity of the raceway system. Use insulating bushings to protect conductors where subjected to vibration or dampness. Install grounding bushings or bonding jumpers on all conduits terminating at concentric or eccentric knockouts.
4. Terminations exposed at weatherproof enclosures and cast outlet boxes shall be made watertight using specified connectors and hubs.
5. Stub freestanding equipment conduits through concrete floors for connections with top of coupling set flush with finished floor. Install plugs to protect threads and entrance of debris.
6. Install specified cable sealing bushings on all conduits originating outside the building walls and terminating within interior switchboard, panel, cabinet or gutters. Install cable sealing bushings or raceway seal for conduit terminations in all grade level or below grade exterior pull, junction or outlet boxes.
7. Where conduits enter building from below grade inject into filled raceways pre-formulated rigid 2 lbs. density polyurethane foam suitable for sealing against water, moisture, insects and rodents.
8. Install expansion fitting or expansion/deflection couplings per manufacturer's recommendations where:
    a. Any conduit that crosses a building structure expansion joint; secure conduit on both sides to building structure and install expansion fitting at joint.
    b. Any conduit that crosses a concrete expansion joint; install expansion/deflection at joint.
    c. Any conduit greater than 1-1/4" is routed along roof top in runs greater than 100 feet; install expansion fittings every 100 feet.
    d. Engineer may allow FMC or LFMC in lieu of expansion fitting or expansion/deflection couplings on conduits 2" and smaller within accessible locations upon further review and written consent.

C. Boxes

1. Standard type suitable for all flush installations and all dry concealed locations.
2. Concrete type suitable for all flush concrete installations.
3. Masonry type suitable for all flush concrete and block installations.

4. Surface cast metal type suitable for all exposed damp and wet surface mounted locations, and dry surface mounted locations less than 96” from finished floor

END OF SECTION

CONFORMED

SECTION 26 09 23

LIGHTING CONTROL DEVICES

PART 1 - GENERAL

1.1 SUMMARY

A. Section includes

1. Provide all labor, materials and equipment necessary to complete the installation required for the items specified under this Section, including but not limited to non-networked lighting control devices.

B. Related sections

1. Where items specified in other Division 26 sections conflict with the requirements of this Section, the most stringent requirement shall govern.
2. The requirements of this Section apply to all Division 26 work, as applicable.
3. Consult all other sections, determine the extent and character of related work and properly coordinate work specified herein with that specified elsewhere to produce a complete installation.

1.2 REFERENCES

A. Comply with the latest edition of the following applicable specifications and standards except as otherwise shown or specified:

1. CCR –California Code of Regulations, Title 24
   a. Part 3 -California Electrical Code(CEC); NFPA 70 National Electrical Code (NEC) with California amendments
2. NEMA –National Electrical Manufacturer's Association
   a. ICS 1; Industrial Control and Systems: General Requirements
   b. ICS 6; Industrial Control and Systems: Enclosures
3. UL -Underwriters Laboratories, Inc.
   a. 50; Cabinets and Boxes
   b. 508; Standard for Industrial Control Equipment
   c. 773A; Standard for Nonindustrial Photoelectric Switches for Lighting Control
   d. 916; Standard for Energy Management Equipment

1.3 SYSTEM DESCRIPTION

A. Lighting Control Devices

1. Devices include occupancy sensors and automatic time clock line voltage devices.

1.4 SUBMITTALS

A. Submit manufacturer's data for materials specified within this Section in accordance to Section 26 05 00.

B. Operating, maintenance and instruction manuals shall be furnished in accordance with General Conditions and Section 26 05 00.

C. Operating instruction manuals outlining the step-by-step procedures required for system start-up and operation shall be furnished. The instructions shall include manufacturer's name, model number, service manual parts list, and brief description of all equipment and their basic operating features.

D. Maintenance instruction manuals outlining maintenance procedures shall be furnished. The manual shall include a troubleshooting guide listing possible breakdowns and repairs and a simplified connection wiring diagram for the system as installed.

1.5 QUALITY ASSURANCE

A. All materials, equipment and parts comprising the materials specified herein shall be new and unused, bearing UL labels where applicable.

1.6 DELIVERY, STORAGE AND HANDLING

A. Handle carefully to avoid damage to internal components, enclosure and finish.

B. Store in a clean, dry environment. Maintain factory packaging and, if required, provide an additional cover to protect enclosure in harsh environments.

1.7 WARRANTY

A. Furnish guarantee in accordance with and in form required under Section 26 05 00.

1.8 SYSTEM STARTUP

A. Refer to manufacturer's documentation to start-up procedures and requirements.

PART 2 -PRODUCTS

2.1 LIGHTING CONTROL DEVICES

A. General
   1. Dual voltage rated for 120 and 277Vac.
   2. Compatible with all electronic ballasts, incandescent and motor rated type loads.
   3. Utilizes advance electronic circuitry which increases relay life, protects from the effects of inrush current, and increases sensor's longevity.
   4. All devices shall have a LED or LCD indicating light.
   5. All switches shall fit behind a decorator style faceplate.

B. Occupancy Wall Switches
   1. Digital Time Wall Switch
      a. Manufacturers
         1) Hubbell TD200, WattStopper TS-400 or approved equal.
      b. General
         1) The digital time switch shall be programmable to turn lights off after a preset time and capable of operating as an ON/OFF switch.
         2) Time switch shall have no minimum load requirement and shall be capable of controlling 800W at 100/120Vac, 1,200W at 230/277Vac, and 1/6 hp at 125Vac.
         3) Time scroll feature shall allow manual overriding of the preset time-out period.
         4) Time switch shall have the option for audible and visual alerts 1 minute prior to timeout.
         5) Time switch shall have an LCD that shows the timer's countdown.
         6) Time-out period shall be adjustable in settings of
            a) 5, 15, and 30 minutes.
            b) 1, 3, 6, 9, and 12 hours.

2. Multi-Technology Wall Switch (Infrared and Ultrasonic Technologies)
    a. Manufacturers
        1) Hubbell LHMT or approved equal (no known equal).
    b. General
        1) The passive adaptive infrared and ultrasonic wall switch sensor shall be a self contained control system that replaces a standard toggle switch.
        2) Microprocessor technology shall be utilized to avoid false ON activations and to provide high sensitivity to minor occupant motion by detecting infrared energy changes and doppler shifts in transmitted ultrasound within the controlled space.
        3) Infrared sensor shall utilize a temperature compensated, dual element sensor and a multi-element fresnel lens.
        4) Ultrasonic senor shall utilize a 40kHz signal.
        5) Sensor shall cover up to 1,000SF for walking motion, with a field of view of 180 degrees.
        6) Sensor shall be capable of controlling 600W at 100/120Vac and 1,200W at 230/277Vac electronic ballasts and incandescent loads.
        7) Sensor shall have a built-in adjustable light level feature that holds load off when a desired footcandle level is present.
        8) Sensor shall timeout at 8 minutes initially and will self-adjust based on occupancy.
3. Multi-Technology, Dual Circuit Wall Switch (Infrared and Ultrasonic Technologies)
    a. Manufacturers
        1) Hubbell LHMTD2 or approved equal (no known equal).
    b. General
        1) Same as the Multi-Technology Wall Switch above, but with dual input, independent circuit switching capability.
4. Automatic Wall Switch (Infrared Technology)
    a. Manufacturers
        1) Hubbell WS1200AT, WattStopper WS-200 or approved equal.
    b. General
        1) The passive adaptive infrared wall switch sensor shall be a self contained control system that replaces a standard toggle switch.
        2) Microprocessor technology shall be utilized to avoid false ON activations and to provide high sensitivity to minor occupant motion by detecting infrared energy changes within the controlled space.
        3) Sensor shall utilize a temperature compensated, dual element sensor and a multi-element fresnel lens.
        4) Sensor shall cover up to 900SF for walking motion, with a field of view of 180 degrees.
        5) Sensor shall have no minimum load requirement and shall be capable of controlling 800W at 100/120Vac and 1,200W at 230/277Vac electronic ballasts and incandescent loads.
        6) Sensor shall have a built-in adjustable light level feature that holds load off when a desired footcandle level is present.
        7) Sensor shall have a time delay adjustable from 5 to 30 minutes.

C. Ceiling and Wall Mounted Sensors
    1. General

1) Microprocessor technology shall be utilized to avoid false ON activations and to provide high sensitivity to minor occupant motion by detecting changes in sensor readings within the controlled space.

2) The sensor shall have a single pole, double throw isolated relay rated for 1.0A at 24Vdc.

3) Sensor shall have a built-in adjustable light level feature that holds load off when a desired footcandle level is present.

4) For accuracy and consistency, sensor shall have a controlled, digital time delay adjustable from 8 to 30 minutes.

5) Provide power packs for sensors as required with the following characteristics:

a) For ease and speed of installation, power and auxiliary relay pack shall have 1/2" snap-in nipple for 1/2" knockouts and mounting on outside of enclosure.

b) Power and auxiliary relay packs shall have dry contacts capable of switching 20A ballast 120/277Vac load, 13A incandescent, 1 hp at 120/240Vac

c) Power packs shall use 120Vac or 277Vac input and provide a 24Vdc, 100mA output.

d) Auxiliary relay packs shall be identical in physical size of power packs and contain no transformer power supply and shall have similar rated contacts.

e) Power pack can be used as a stand alone, low voltage switch, or can be wired to sensor for auto control.

f) Power and auxiliary relay packs shall have low voltage teflon coated leads, rated for 300V, suitable for use in plenum applications.

2. Infrared Sensor

a. Manufacturers

1) Ceiling Only Mount: Hubbell OMNI-IR-RP series, WattStopper CI series or approved equal.

2) Wall Mount: Hubbell LO-DIA-RP, WattStopper CX series or approved equal.

b. General

1) The passive infrared sensor shall be capable of detecting presence in the control area by changes in the infrared energy.

2) Sensor shall utilize a temperature compensated dual element sensor and a multi-element fresnel lens.

3) Sensor with a 120” mounting height shall have the following typical coverage zones:

a) Ceiling only mounts: 450 SF or 1,500SF areas at 360 degrees.

b) Wall/ceiling mounts: 1,600SF area at 110 degrees.

3. Ultrasonic Sensor

a. Manufacturers

1) Hubbell OMNI-US-RP series, WattStopper WT series or approved equal.

b. General

1) The ultrasonic sensor shall be capable of detecting presence in the control area by doppler shifts in transmitted ultrasound within the controlled space.

2) Sensors of varying frequencies shall not be allowed so as to prevent sensors from interfering with each other and to assure compatibility in the event more sensors are added.

3) Sensor with a 120” mounting height shall have the following minimum rectangular coverage zones:

a) 500 SF at 180 degrees

b) 1,000SF or 2,000SF areas at 360 degrees.

4. Dual Technology Sensor (Infrared and Ultrasonic Technologies)
   a. Manufacturers
      1) Hubbell LO-DT-RP or OMNI-DT-RP series, WattStopper DT series or approved equal.
   b. General
      1) The passive adaptive infrared and ultrasonic sensor shall be capable of detecting presence in the control area by changes in the infrared energy and doppler shifts in transmitted ultrasound within the controlled space.
      2) Sensors of varying frequencies shall not be allowed so as to prevent sensors from interfering with each other and to assure compatibility in the event more sensors are added.
      3) Sensor shall utilize a temperature compensated dual element sensor and a multi-element fresnel lens.
      4) Ceiling sensors with a 120" mounting height shall have the following minimum coverage zones:

         a) 500 SF at 180 degrees

         b) 1,000SF or 2,000SF areas at 360 degrees.

      5) Wall sensor with a 120" mounting height shall have a 1,600SF minimum coverage area at nearly 180 degrees.

PART 3 -EXECUTION

3.1 INSTALLATION

A. Work shall be installed as shown on the Drawings in accordance with the manufacturer's diagrams and recommendations, except where otherwise indicated.

B. Contractor shall provide initial setup and programming for all devices and software installed under this Section for a complete and operational system. System interfaces shall be coordinated with Owner, where appropriate.

C. All cable runs shall comply with the requirements of this Division and manufacturer's specifications, and shall be continuous between devices and equipment. All control cabling shall meet CEC/NEC 725 or 800 as required and be UL listed for its application.

D. Set sensor's time delays and sensitivity adjustments in accordance to manufacturer's guidelines and Owner's direction.

E. Provide appropriate power pack for each ceiling or wall mounted occupancy sensor, whether shown or not on Drawings, unless otherwise noted.

F. Where drawings indicate slave sensors provide necessary raceway and cabling to connect sensor such that input from either master or slave sensor will activate load.

G. Locate photoelectric switches (photocell), when required, at one of the following locations with a northern or western exposure:
   1. Route ½" conduit to roof and penetrate deck and locate +18" above finish floor. Seal penetration per Specifications.
   2. Route ½" conduit to nearest service or support exterior doorway and mount +8" above door frame in a flush weatherproof outlet box.

H. Orient photocell toward north. If northern orientation cannot be obtained, orient the device west.

I. Provide the following items for a complete and operational low voltage lighting control system as required by the manufacturer's specifications:
   1. Auxiliary cabinets and boxes for all modules and devices not mounted within relay panel.

2. Install network modules and repeaters necessary to extend the dataline to all modules and devices within the network as required by manufacturer's specifications.
3. Provide ADIMs of sufficient quantities to connect all analog devices shown on Drawings.
4. Coordinate interface with BMS/BAS with other trades and vendors to provide functionality contained herein (i.e., time clock scheduling and relay status).
5. All low voltage cables between system components, sensors and input devices shall meet manufacturer's specifications.

J. Contractor shall coordinate programming of time clock schedules and relay groups not shown in Drawings with Owner.

3.2 FIELD QUALITY CONTROL

A. The Contractor shall demonstrate the system functionality to manufacturer's specifications and requirements after completion of installation.

B. The Engineer or Owner may order any changes, adjustments or further tests deemed necessary to assure that the system and its components are complete and operational in accordance with the Specifications.

3.3 ADJUSTING

A. After 60 days of Owner occupancy provide labor to adjust time delays and sensitivity adjustments on each occupancy and photocell sensor.

3.4 DEMONSTRATION

A. The Contractor shall properly instruct the Owner to the operational procedures of the system.

B. Within the first 30 days from system startup, the equipment supplier shall provide no less than four (4) hours for instruction and training.

END OF SECTION

CONFORMED

SECTION 26 09 24

NETWORKED LIGHTING CONTROL SYSTEMS

PART 1 - GENERAL

1.1 SUMMARY

A. Section includes

1. Provide all labor, materials and equipment necessary to complete the installation required for the items specified under this Section, including but not limited to networked lighting control devices and low voltage lighting control systems.

B. Related sections

1. Where items specified in other Division 26 sections conflict with the requirements of this Section, the most stringent requirement shall govern.
    a. 26 09 23 – Lighting Controls
2. The requirements of this Section apply to all Division 26 work, as applicable.
3. Consult all other sections, determine the extent and character of related work and properly coordinate work specified herein with that specified elsewhere to produce a complete installation.

C. Control Intent – Control Intent includes, but is not limited to:

1. Defaults and initial calibration settings for such items as time delay, sensitivity, fade rates, etc.
2. Initial sensor and switching zones
3. Initial time switch settings
4. Task lighting and receptacle controls
5. Emergency Lighting control (if applicable)

1.2 REFERENCES

A. Comply with the latest edition of the following applicable specifications and standards except as otherwise shown or specified:

1. CCR –California Code of Regulations, Title 24
    a. Part 3 -California Electrical Code(CEC); NFPA 70 National Electrical Code (NEC) with California amendments
2. NEMA –National Electrical Manufacturer’s Association
    a. ICS 1; Industrial Control and Systems: General Requirements
    b. ICS 6; Industrial Control and Systems: Enclosures
3. UL -Underwriters Laboratories, Inc.
    a. 50; Cabinets and Boxes
    b. 508; Standard for Industrial Control Equipment
    c. 773A; Standard for Nonindustrial Photoelectric Switches for Lighting Control
    d. 916; Standard for Energy Management Equipment

1.3 SYSTEM DESCRIPTION

A. Provide a complete and operational networked system that includes all relay panels shown on Drawings. Contactor shall provide all necessary modules and accessories as required to connect all devices for a fully functional system.

B. The Lighting Control and Automation system as defined under this section covers the following equipment:

C. Digital Occupancy Sensors – Self-configuring, digitally addressable and calibrated occupancy sensors with LCD display and two-way active infrared (IR) communications.

D. Digital Switches – Self-configuring, digitally addressable pushbutton on/off, dimming, and scene switches with two-way active infrared (IR) communications.

E. Handheld remotes for personal control – One-button dimming, two-button on/off, or five-button scene remotes provide control using infrared communications. Remote may be configured in the field to control selected loads or scenes without special tools.

F. Digital Daylighting Sensors – Single-zone closed loop, multi-zone open loop and single-zone dual-loop daylighting sensors with two-way active infrared (IR) communications can provide switching, bi-level, tri-level or dimming control for daylight harvesting.

G. Digital Room Controllers – Self-configuring, digitally addressable one, two or three relay plenum-rated controllers for on/off control. Selected models include 0-10 volt or line voltage forward phase control dimming outputs and integral current monitoring capabilities.

H. Digital Plug-Load Controllers – Self-configuring, digitally addressable, single relay, plenum-rated application-specific controllers. Selected models include integral current monitoring capabilities.

I. Configuration Tools – Handheld remote for room configuration and relay panel programming provides two way infrared (IR) communications to digital devices and allows complete configuration and reconfiguration of the device / room from up to 30 feet away. Unit to have Organic LED display, simple pushbutton interface, and allow bi-directional communication of room variables and occupancy sensor settings. Computer software also customizes room settings.

J. Digital Lighting Management (DLM) local network – Free topology, plug-in wiring system (Cat 5e) for power and data to room devices.

K. Digital Lighting Management (DLM) segment network – Linear topology, BACnet MS/TP network (1.5 twisted pair, shielded,) to connect multiple DLM local networks for centralized control

L. Network Bridge – provides BACnet MS/TP-compliant digital networked communication between rooms, panels and the Segment Manager or building automation system (BAS) and automatically creates BACnet objects representative of connected devices.

M. Segment Manager – provides web browser-based user interface for system control, scheduling, power monitoring, room device parameter administration and reporting.

N. Programming and Configuration software – Optional PC-native application capable of accessing DLM control parameters within a room, for the local network, via a USB adapter, or globally, for many segment networks simultaneously, via BACnet/IP communication.

O. LMCP Digital Lighting Management Relay Panel – provides up to 8, 24, or 48 mechanically latching relays. Relays include a manual override and a single push-on connector for easy installation or removal from the panel. Panel accepts program changes from handheld configuration tool for date and time, location, holidays, event scheduling, button binding and group programming. Provides BACnet MS/TP-compliant digital networked communication between other lighting controls and/or building automation system (BAS).

P. Emergency Lighting Control Unit (ELCU) – allows a standard lighting control device to control emergency lighting in conjunction with normal lighting in any area within a building.

1.4 LIGHTING CONTROL APPLICATIONS

A. Unless relevant provisions of the applicable local Energy Codes are more stringent, provide a minimum application of lighting controls as follows:

B. Space Control Requirements – Provide occupancy/vacancy sensors with Manual- or Partial-ON functionality in all spaces except toilet rooms, storerooms, library stacks, or other applications where hands-free operation is desirable and Automatic-ON occupancy sensors are more appropriate. Provide Manual-ON occupancy/vacancy sensors for any enclosed office, conference room, meeting room, open plan system and training room. For spaces with multiple occupants, or where line-of-sight may be obscured, provide ceiling- or corner-mounted sensors and Manual-ON switches.

C. Bi-Level Lighting – Provide multi-level controls in all spaces except toilet rooms, storerooms, library stacks, or applications where variable dimming is used.

D. Task Lighting / Plug Loads – Provide automatic shut off of non essential plug loads and task lighting in all spaces except toilet rooms and storerooms. Provide Automatic-ON of plug loads whenever spaces are occupied. For spaces with multiple occupants a single shut off consistent with the overhead lighting may be used for the area.

E. Daylit Areas – Provide daylight-responsive automatic control in all spaces (conditioned or unconditioned) where daylight contribution is available as defined by relevant local building energy code:

1. All luminaires within code-defined daylight zones shall be controlled separately from luminaires outside of daylit zones.

2. Daytime setpoints for total ambient illumination (combined daylight and electric light) levels that initiate dimming shall be programmed in compliance with relevant local building energy codes.

3. Multiple-leveled switched daylight harvesting controls may be utilized for areas marked on drawings.

4. Provide smooth and continuous daylight dimming for areas marked on drawings. Daylighting control system may be designed to turn off electric lighting when daylight is at or above required lighting levels, only if system functions to turn lamps back on at dimmed level, rather than turning full-on prior to dimming.

F. Conference, meeting, training, auditoriums, and multipurpose rooms shall have controls that allow for independent control of each local control zone. Rooms larger than 300 square feet shall instead have at least four (4) pre-set lighting scenes unless otherwise specified. Occupancy / vacancy sensors shall be provided to extinguish all lighting in the space. Spaces with up to four moveable walls shall include controls that can be reconfigured when the room is partitioned

1.5 SUBMITTALS

A. Submit manufacturer's data for materials specified within this Section in accordance to Section 26 05 00.

B. Operating, maintenance and instruction manuals shall be furnished in accordance with General Conditions and Section 26 05 00.

C. Operating instruction manuals outlining the step-by-step procedures required for system start-up and operation shall be furnished. The instructions shall include manufacturer's name, model number, service manual parts list, and brief description of all equipment and their basic operating features.

D. Maintenance instruction manuals outlining maintenance procedures shall be furnished. The manual shall include a troubleshooting guide listing possible breakdowns and repairs and a simplified connection wiring diagram for the system as installed.

1.6 QUALITY ASSURANCE

A. All materials, equipment and parts comprising the materials specified herein shall be new and unused, bearing UL labels where applicable.

1.7 DELIVERY, STORAGE AND HANDLING

A. Handle carefully to avoid damage to internal components, enclosure and finish.

B. Store in a clean, dry environment. Maintain factory packaging and, if required, provide an additional cover to protect enclosure in harsh environments.

1.8 WARRANTY

A. Furnish guarantee in accordance with and in form required under Section 26 05 00.

1.9 SYSTEM STARTUP

A. Refer to manufacturer's documentation to start-up procedures and requirements.

PART 2 -PRODUCTS

2.1 LOW VOLTAGE LIGHTING CONTROL SYSTEM

A. Manufacturers (basis of design)

1. WattStopper DLM series, or approved equal.

2.2 DIGITAL LIGHTING CONTROLS

A. Furnish the system which accommodates the square-footage coverage requirements for each area controlled, utilizing room controllers, digital occupancy sensors, switches, daylighting sensors and accessories which suit the lighting and electrical system parameters.

2.3 DIGITAL WALL SWITCH OCCUPANCY SENSORS

A. Wallbox mounted passive infrared PIR or dual technology (passive infrared and ultrasonic) digital occupancy sensor with 1 or 2 switch buttons.

B. Digital Occupancy Sensors shall provide scrolling LCD display for digital calibration and electronic documentation. Features include the following:

1. Digital calibration and pushbutton configuration for the following variables:
    a. Sensitivity – 0-100% in 10% increments
    b. Time delay – 1-30 minutes in 1 minute increments
    c. Test mode – Five second time delay
    d. Detection technology – PIR, Dual Technology activation and/or re-activation.
    e. Walk-through mode
    f. Load parameters including Auto/Manual-ON, blink warning, and daylight enable/disable when photosensors are included in the DLM local network.
2. Programmable control functionality including:
    a. Each sensor may be programmed to control specific loads within a local network.
    b. Sensor shall be capable of activating one of 16 user-definable lighting scenes.
    c. Adjustable retrigger time period for manual-on loads. Load will retrigger (turn on) automatically during the configurable period of time (default 10 seconds) after turning off.
    d. On dual technology sensors, independently configurable trigger modes are available for both Normal (NH) and After Hours (AH) time periods. The retrigger mode can be programmed to use the following technologies:
        1) Ultrasonic and Passive Infrared
        2) Ultrasonic or Passive Infrared
        3) Ultrasonic only
        4) Passive Infrared only
3. Independently configurable sensitivity settings for passive infrared and ultrasonic technologies (on dual technology sensors) for both Normal (NH) and After Hour (AH) time periods.
4. Two RJ-45 ports for connection to DLM local network.
5. Two-way infrared (IR) transceiver to allow remote programming through handheld configuration tool and control by remote personal controls.
6. Device Status LEDs including:
    a. PIR detection

b. Ultrasonic detection

c. Configuration mode

d. Load binding

7. Assignment of occupancy sensor to a specific load within the room without wiring or special tools.
8. Assignment of local buttons to specific loads within the room without wiring or special tools
9. Manual override of controlled loads.
10. All digital parameter data programmed into an individual wall switch sensor shall be retained in non-volatile FLASH memory within the wall switch sensor itself. Memory shall have an expected life of no less than 10 years.

C. BACnet object information shall be available for the following objects:

1. Detection state
2. Occupancy sensor time delay
3. Occupancy sensor sensitivity, PIR and Ultrasonic
4. Button state
5. Switch lock control
6. Switch lock status

D. Units shall not have any dip switches or potentiometers for field settings.

E. Multiple occupancy sensors may be installed in a room by simply connecting them to the free topology DLM local network. No additional configuration will be required.

F. Two-button wall switch occupancy sensors, when connected to a single relay dimming room controller, shall operate in the following sequence as a factory default:

1. Left button
   a. Press and release - Turn load on
   b. Press and hold - Raise dimming load
2. Right button
   a. Press and release - Turn load off
   b. Press and hold - Lower dimming load

G. Low voltage momentary pushbuttons shall include the following features:

1. Load/Scene Status LED on each switch button with the following characteristics:
   a. Bi-level LED
   b. Dim locator level indicates power to switch
   c. Bright status level indicates that load or scene is active
2. The following button attributes may be changed or selected using a wireless configuration tool:
   a. Load and Scene button function may be reconfigured for individual buttons (from Load to Scene, and vice versa).
   b. Individual button function may be configured to Toggle, On only or Off only.
   c. Individual scenes may be locked to prevent unauthorized change.
   d. Fade Up and Fade Down times for individual scenes may be adjusted from 0 seconds to 18 hours.
   e. Ramp rate may be adjusted for each dimmer switch.
   f. Switch buttons may be bound to any load on a room controller and are not load type dependent; each button may be bound to multiple loads.

H. WattStopper part numbers: LMPW, LMDW. Available in white, light almond, ivory, grey, red and black; compatible with wall plates with decorator opening.

2.4 DIGITAL WALL OR CEILING MOUNTED OCCUPANCY SENSOR

A. Wall or ceiling mounted (to suit installation) passive infrared (PIR), ultrasonic or dual technology digital (passive infrared and ultrasonic) occupancy sensor.

B. Digital Occupancy Sensors shall provide graphic LCD display for digital calibration and electronic documentation. Features include the following:

1. Digital calibration and pushbutton configuration for the following variables:
    a. Sensitivity – 0-100% in 10% increments
    b. Time delay – 1-30 minutes in 1 minute increments
    c. Test mode – Five second time delay
    d. Detection technology – PIR, Ultrasonic or Dual Technology activation and/or re-activation.
    e. Walk-through mode
    f. Load parameters including Auto/Manual-ON, blink warning, and daylight enable/disable when photosensors are included in the DLM local network.
2. Programmable control functionality including:
    a. Each sensor may be programmed to control specific loads within a local network.
    b. Sensor shall be capable of activating one of 16 user-definable lighting scenes.
    c. Adjustable retrigger time period for manual-on loads. Load will retrigger (turn on) automatically within a configurable period of time (default 10 seconds) after turning off.
    d. On dual technology sensors, independently configurable trigger modes are available for both Normal (NH) and After Hours (AH) time periods. The retrigger mode can be programmed to use the following technologies:
        1) Ultrasonic and Passive Infrared
        2) Ultrasonic or Passive Infrared
        3) Ultrasonic only
        4) Passive Infrared only
3. Independently configurable sensitivity settings for passive infrared and ultrasonic technologies (on dual technology sensors) for both Normal (NH) and After Hour (AH) time periods.
4. One or two RJ-45 port(s) for connection to DLM local network.
5. Two-way infrared (IR) transceiver to allow remote programming through handheld commissioning tool and control by remote personal controls.
6. Device Status LEDs, which may be disabled for selected applications, including:
    a. PIR detection
    b. Ultrasonic detection
    c. Configuration mode
    d. Load binding
7. Assignment of occupancy sensor to a specific load within the room without wiring or special tools.
8. Manual override of controlled loads.
9. All digital parameter data programmed into an individual occupancy sensor shall be retained in non-volatile FLASH memory within the sensor itself. Memory shall have an expected life of no less than 10 years.

C. BACnet object information shall be available for the following objects:

CONFORMED

1. Detection state
2. Occupancy sensor time delay
3. Occupancy sensor sensitivity, PIR and Ultrasonic

D. Units shall not have any dip switches or potentiometers for field settings.

E. Multiple occupancy sensors may be installed in a room by simply connecting them to the free topology DLM local network. No additional configuration will be required.

F. WattStopper product numbers: LMPX, LMDX, LMPC, LMUC, LMDC

2.5 DIGITAL WALL SWITCHES

A. Low voltage momentary pushbutton switches in 1, 2, 3, 4, 5 and 8 button configuration. Wall switches shall include the following features:

1. Two-way infrared (IR) transceiver for use with personal and configuration remote controls.
2. Removable buttons for field replacement with engraved buttons and/or alternate color buttons. Button replacement may be completed without removing the switch from the wall.
3. Configuration LED on each switch that blinks to indicate data transmission.
4. Load/Scene Status LED on each switch button with the following characteristics:
   a. Bi-level LED
   b. Dim locator level indicates power to switch
   c. Bright status level indicates that load or scene is active
5. Dimming switches shall include seven bi-level LEDs to indicate load levels using 14 steps.
6. Programmable control functionality including:
   a. Button priority may be configured to any BACnet priority level, from 1-16, corresponding to networked operation allowing local actions to utilize life safety priority
   b. Scene patterns may be saved to any button other than dimming rockers. Once set, buttons may be digitally locked to prevent overwriting of the preset levels.
7. All digital parameter data programmed into an individual wall switch shall be retained in non-volatile FLASH memory within the wall switch itself. Memory shall have an expected life of no less than 10 years.

B. BACnet object information shall be available for the following objects:

1. Button state
2. Switch lock control
3. Switch lock status

C. Two RJ-45 ports for connection to DLM local network.

D. Multiple digital wall switches may be installed in a room by simply connecting them to the free topology DLM local network. No additional configuration shall be required to achieve multi-way switching.

E. The following switch attributes may be changed or selected using a wireless configuration tool:

1. Load and Scene button function may be reconfigured for individual buttons (from Load to Scene, and vice versa).
2. Individual button function may be configured to Toggle, On only or Off only.
3. Individual scenes may be locked to prevent unauthorized change.
4. Fade Up and Fade Down times for individual scenes may be adjusted from 0 seconds to 18 hours.
5. Ramp rate may be adjusted for each dimmer switch.

6. Switch buttons may be bound to any load on a room controller and are not load type dependant; each button may be bound to multiple loads.

F. WattStopper product numbers: LMSW-101, LMSW-102, LMSW-103, LMSW-104, LMSW-105, LMSW-108, LMDM-101. Available in white, light almond, ivory, grey, red and black; compatible with wall plates with decorator opening.

2.6 HANDHELD REMOTE CONTROLS

A. Battery-operated handheld devices in 1, 2 and 5 button configurations for remote switching or dimming control. Remote controls shall include the following features:

1. Two-way infrared (IR) transceiver for line of sight communication with DLM local network within up to 30 feet.
2. LED on each button confirms button press.
3. Load buttons may be bound to any load on a room controller and are not load type dependant; each button may be bound to multiple loads.
4. Inactivity timeout to save battery life.

B. A wall mount holster and mounting hardware shall be included with each remote control

C. WattStopper part numbers: LMRH-101, LMRH-102, LMRH-105.

2.7 DIGITAL PARTITION CONTROLS

A. Partition controls shall enable manual or automatic coordination of lighting controls in flexible spaces with up to four moveable walls by reconfiguring the connected digital switches and occupancy sensors.

B. Four-button low voltage pushbutton switch for manual control.

1. Two-way infrared (IR) transceiver for use with configuration remote control.
2. Removable buttons for field replacement with engraved buttons and/or alternate color buttons. Button replacement may be completed without removing the switch from the wall.
3. Configuration LED on each switch that blinks to indicate data transmission.
4. Each button represents one wall; Green button LED indicates status.
5. Two RJ-45 ports for connection to DLM local network.
6. WattStopper part number: LMPS-104. Available in white, light almond, ivory, grey and black; compatible with wall plates with decorator opening.

C. Contact closure interface for automatic control via input from limit switches on movable walls (by others).

1. Operates on Class 2 power supplied by DLM local network.
2. Includes 24VDC output and four input terminals for maintained third party contract closure inputs.
    a. Input max. sink/source current: 1-5mA
    b. Logic input signal voltage High: >18VDC
    c. Logic input signal voltage Low: <2VDC

D. Four status LEDs under hinged cover indicate if walls are open or closed; supports LMPS-104 as remote status indicator.

E. Two RJ-45 ports for connection to DLM local network.

F. WattStopper part number: LMIO-102

2.8 DIGITAL DAYLIGHTING SENSORS

A. Digital daylighting sensors shall work with room controllers to provide automatic switching, bi-level, or tri-level or dimming daylight harvesting capabilities for any load type connected to a room controller. Daylighting sensors shall be interchangeable without the need for rewiring.

1. Closed loop sensors measure the ambient light in the space and control a single lighting zone.
2. Open loop sensors measure incoming daylight in the space, and are capable of controlling up to three lighting zones.
3. Dual loop sensors measure both ambient and incoming daylight in the space to insure that proper light levels are maintained as changes to reflective materials are made in a single zone.

B. Digital daylighting sensors shall include the following features:

1. The sensor's internal photodiode shall only measure lightwaves within the visible spectrum. The photodiode's spectral response curve shall closely match the entire photopic curve. The photodiode shall not measure energy in either the ultraviolet or infrared spectrums. The photocell shall have a sensitivity of less than 5% for any wavelengths less than 400 nanometers or greater than 700 nanometers.
2. Sensor light level range shall be from 1-6,553 footcandles (fc).
3. The capability of ON/OFF, bi-level or tri-level switching, or dimming, for each controlled zone, depending on the selection of room controller(s) and load binding to room controller(s).
4. For switching daylight harvesting, the photosensor shall provide a field-selectable deadband, or a separation, between the "ON Setpoint" and the "OFF Setpoint" that will prevent the lights from cycling excessively after they turn off.
5. For dimming daylight harvesting, the photosensor shall provide the option, when the daylight contribution is sufficient, of turning lights off or dimming lights to a field-selectable minimum level.
6. Photosensors shall have a digital, independently configurable fade rate for both increasing and decreasing light level in units of percent per second.
7. Photosensors shall provide adjustable cut-off time. Cut-off time is defined by the number of selected minutes the load is at the minimum output before the load turns off. Selectable range between 0-240 minutes including option to never cut-off.
8. Optional wall switch override shall allow occupants to reduce lighting level to increase energy savings or, if permitted by system administrator, raise lighting levels for a selectable period of time or cycle of occupancy.
9. Integral infrared (IR) transceiver for configuration and/or commissioning with a handheld configuration tool, to transmit detected light level to wireless configuration tool, and for communication with personal remote controls.
10. Configuration LED status light on device that blinks to indicate data transmission.
11. Status LED indicates test mode, override mode and load binding.
12. Recessed switch on device to turn controlled load(s) ON and OFF.
13. BACnet object information shall be available for the following daylighting sensor objects, based on the specific photocell's settings:
    a. Light level
    b. Day and night setpoints
    c. Off time delay
    d. On and off setpoints
    e. Up to three zone setpoints
    f. Operating mode – on/off, bi-level, tri-level or dimming
14. One RJ-45 port for connection to DLM local network.
15. A choice of accessories to accommodate multiple mounting methods and building materials. The photosensors may be mounted on a ceiling tile, skylight light well, suspended lighting fixture or backbox. Standard tube photosensors accommodate mounting materials from 0-0.62" thickness

(LMLS-400, LMLS-500). Extended tube photosensors accommodate mounting materials from 0.62”-1.25” thickness (LMLS-400-L, LMLS-500-L). Mounting brackets are compatible with J boxes (LMLS-MB1) and wall mounting (LMLS-MB2). LMLS-600 photosensor to be mounted on included bracket below skylight well.

16. Any load or group of loads in the room can be assigned to a daylighting zone
17. Each load within a daylighting zone can be individually enabled or disabled for discrete control (load independence).
18. All digital parameter data programmed into a photosensor shall be retained in non-volatile FLASH memory within the photosensor itself. Memory shall have an expected life of no less than 10 years.

C. Closed loop digital photosensors shall include the following additional features:

1. An internal photodiode that measures light in a 100-degree angle, cutting off the unwanted light from bright sources outside of this cone.
2. Automatic self-calibration, initiated from the photosensor, a wireless configuration tool or a PC with appropriate software.
3. Automatically establishes application-specific setpoints following self-calibration. For switching operation, an adequate deadband between the ON and OFF setpoints shall prevent the lights from cycling; for dimming operation a sliding setpoint control algorithm with separate Day and Night setpoints shall prevent abrupt ramping of loads.
4. WattStopper Product Number: LMLS-400, LMLS-400-L.

D. Open loop digital photosensors shall include the following additional features:

1. An internal photodiode that measures light in a 60-degree angle cutting off the unwanted light from the interior of the room.
2. Automatically establishes application-specific setpoints following manual calibration using a wireless configuration tool or a PC with appropriate software. For switching operation, an adequate deadband between the ON and OFF setpoints for each zone shall prevent the lights from cycling; for dimming operation, a proportional control algorithm shall maintain the design lighting level in each zone.
3. Each of the three discrete daylight zones can include any non overlapping group of loads in the room.
4. WattStopper Product Number: LMLS-500, LMLS-500-L.

E. Dual loop digital photosensors shall include the following additional features:

1. Close loop portion of dual loop device must have an internal photodiode that measures light in a 100 degree angle, cutting off the unwanted light from sources outside of this con
2. Open loop portion of dual loop device must have an internal photodiode that can measure light in a 60 degree angle, cutting off the unwanted light from the interior of the room.
3. Automatically establishes application-specific set-points following self-calibration. For switching operation, an adequate deadband between the ON and OFF setpoints shall prevent the lights from cycling; for dimming operation a sliding setpoint control algorithm with separate Day and Night setpoints shall prevent abrupt ramping of load.
4. Device must reference closed loop photosensor information as a base line reference. The device must be able to analyze the open loop photosensor information to determine if an adjustment in light levels is required.
5. Device must be able to automatically commission setpoints each night to provide adjustments to electrical lighting based on changes in overall lighting in the space due to changes in reflectance within the space or changes to daylight contribution based on seasonal changes.
6. Device must include extendable mounting arm to properly position sensor within a skylight well.
7. WattStopper product number LMLS-600

2.9 DIGITAL ROOM CONTROLLERS AND PLUG-LOAD CONTROLLERS

A. Digital controllers for lighting and plug loads automatically bind the room loads to the connected devices in the space without commissioning or the use of any tools. Room and plug load controllers shall be provided to match the room lighting and plug load control requirements. The controllers will be simple to install, and will not have dip switches or potentiometers, or require special configuration for standard Plug n' Go applications. The control units will include the following features:

1. Automatic room configuration to the most energy-efficient sequence of operation based upon the devices in the room.
2. Simple replacement – Using the default automatic configuration capabilities, a room controller may be replaced with an off-the-shelf.
3. Multiple room controllers connected together in a local network must automatically prioritize each room controller, without requiring any configuration or setup, so that loads are sequentially assigned using room controller device ID's from highest to lowest.
4. Device Status LEDs to indicate:
    a. Data transmission
    b. Device has power
    c. Status for each load
    d. Configuration status
5. Quick installation features including:
    a. Standard junction box mounting
    b. Quick low voltage connections using standard RJ-45 patch cable
6. Based on individual configuration, each load shall be capable of the following behavior on power up following the loss of normal power:
    a. Turn on to 100%
    b. Remain off
    c. Turn on to last level
7. Each load shall be configurable to operate in the following sequences based on occupancy:
    a. Auto-on/Auto-off (Follow on and off)
    b. Manual-on/Auto-off (Follow off only)
8. The polarity of each load output shall be reversible, via digital configuration, so that on is off and off is on.
9. BACnet object information shall be available for the following objects:
    a. Load status
    b. Electrical current
    c. Total watts per controller
    d. Schedule state – normal or after-hours
    e. Demand response control and cap level
    f. Room occupancy status
    g. Total room lighting and plug loads watts
    h. Total room watts/sq ft
    i. Force on/off all loads
10. UL 2043 plenum rated
11. Manual override and LED indication for each load
12. Dual voltage (120/277 VAC, 60 Hz), or 347 VAC, 60 Hz (selected models only). 120/277 volt models rated for 20A total load, derating to 16A required for some dimmed loads (forward phase

dimming); 347 volt models rated for 15A total load; plug load controllers carry application-specific UL 20 rating for receptacle control.

13. Zero cross circuitry for each load
14. All digital parameter data programmed into an individual room controller or plug load controller shall be retained in non-volatile FLASH memory within the controller itself. Memory shall have an expected life of no less than 10 years.

B. On/Off Room Controllers shall include:

1. One or two relay configuration
2. Efficient 150 mA switching power supply
3. Three RJ-45 DLM local network ports with integral strain relief and dust cover
4. WattStopper product numbers: LMRC-101, LMRC-102

C. On/Off/Dimming enhanced Room Controllers shall include:

1. Real time current monitoring
2. Multiple relay configurations
   a. One, two or three relays (LMRC-21x series)
   b. One or two relays (LMRC-22x series)
3. Efficient 250 mA switching power supply
4. Four RJ-45 DLM local network ports with integral strain relief and dust cover
5. One dimming output per relay
   a. 0-10V Dimming - Where indicated, one 0-10 volt analog output per relay for control of compatible ballasts and LED drivers. The 0-10 volt output shall automatically open upon loss of power to the Room Controller to assure full light output from the controlled lighting. (LMRC-21x series)
   b. Line Voltage, Forward Phase Dimming - Where indicated, one forward phase control line voltage dimming output per relay for control of compatible two-wire or three-wire ballasts, LED drivers, MLV, forward phase compatible ELV, neon/cold cathode and incandescent loads. (LMRC-22x series)
   c. Each dimming output channel shall have an independently configurable minimum and maximum calibration trim level to set the dimming range to match the true dynamic range of the connected ballast or driver.
   d. The LED level indicators on bound dimming switches shall utilize this new maximum and minimum trim.
   e. Each dimming output channel shall have an independently configurable minimum and maximum trim level to set the dynamic range of the output within the new 0-100% dimming range defined by the minimum and maximum calibration trim.
   f. Calibration and trim levels must be set per output channel.
   g. Devices that set calibration or trim levels per controller are not acceptable.
6. All configuration shall be digital. Devices that set calibration or trim levels per output channel via trim pots or dip-switches are not acceptable.
7. Each load shall have an independently configurable preset on level for Normal Hours and After Hours events to allow different dimmed levels to be established at the start of both Normal Hours and After Hours events.
8. Fade rates for dimming loads shall be specific to bound switch buttons, and the load shall maintain a default value for any bound buttons that do not specify a unique value.
9. The following dimming attributes may be changed or selected using a wireless configuration tool:
   a. Establish preset level for each load from 0-100%

b. Set high and low trim for each load

c. Set lamp burn in time for each load up to 100 hours

10. Override button for each load provides the following functions:

a. Press and release for on/off control

b. Press and hold for dimming control

11. WattStopper product numbers: LMRC-211, LRMC-212, LRMC-213, LMRC-221, LMRC-222

D. Plug Load Room Controllers shall include:

1. One relay configuration with additional connection for unswitched load

2. Configurable additive time delay to extend plug load time delay beyond occupancy sensor time delay (e.g. a 10 minute additive delay in a space with a 20 minute occupancy sensor delay ensures that plug loads turn off 30 minutes after the space is vacated).

3. Factory default operation is Auto-on/Auto-off, based on occupancy

4. Real time current monitoring of both switched and un-switched load (LMPL-201 only)

5. Efficient switching power supply

a. 150mA (LMPL-101)

b. 250mA (LMPL-201)

6. RJ-45 DLM local network ports

a. Three RJ-45 ports (LMPL-101)

b. Four RJ-45 ports (LMPL-201)

7. WattStopper product numbers: LMPL-101, LMPL-201.

2.10 DLM LOCAL NETWORK (ROOM NETWORK)

A. The DLM local network is a free topology lighting control physical connection and communication protocol designed to control a small area of a building.

B. Features of the DLM local network include:

1. Plug n' Go® automatic configuration and binding of occupancy sensors, switches and lighting loads to the most energy-efficient sequence of operation based upon the device attached.

2. Simple replacement of any device in the network with a standard off the shelf unit without requiring commissioning, configuration or setup.

3. Push n' Learn® configuration to change the automatic configuration, including binding and load parameters without tools, using only the buttons on the digital devices in the local network.

4. Two-way infrared communications for control by handheld remotes, and configuration by a handheld tool including adjusting load parameters, sensor configuration and binding, within a line of sight of up to 30 feet from a sensor, wall switch or IR receiver.

C. Digital room devices connect to the local network using pre-terminated Cat 5e cables with RJ-45 connectors, which provide both data and power to room devices. Systems that utilize RJ-45 patch cords but do not provide serial communication data from individual end devices are not acceptable.

D. If manufacturer's pre-terminated Cat 5e cables are not used for the installation, the contractor is responsible for testing each cable following installation and supplying manufacturer with test results.

E. WattStopper Product Number: LMRJ-Series

2.11 DLM SEGMENT NETWORK (ROOM TO ROOM NETWORK)

A. The segment network shall be a linear topology, BACnet-based MS/TP subnet to connect DLM local networks (rooms) and LMCP relay panels for centralized control.

1. Each connected DLM local network shall include a single network bridge (LMBC-300), and the network bridge is the only room-based device that is connected to the segment network.
2. Network bridges, relay panels and segment managers shall include terminal blocks, with provisions for separate “in” and “out” terminations, for segment network connections.
3. The segment network shall utilize 1.5 twisted pair, shielded, cable supplied by the lighting control manufacturer. The maximum cable run for each segment is 4,000 feet. Conductor-to-conductor capacitance of the twisted pair shall be less than 30 pf/ft and have a characteristic impedance of 120 Ohms.
4. Network signal integrity requires that each conductor and ground wire be correctly terminated at every connected device.
5. Substitution of manufacturer-supplied cable must be pre-approved: Manufacturer will not certify network reliability, and reserves the right to void warranty, if non-approved cable is installed, and if terminations are not completed according to manufacturer’s specific requirements.
6. Segment networks shall be capable of connecting to BACnet-compliant BAS (provided by others) either directly, via MS/TP, or through NB-ROUTERs, via BACnet/IP or BACnet/Ethernet. Systems whose room-connected network infrastructure require gateway devices to provide BACnet data to a BAS are unacceptable.

B. WattStopper Product Number: LM-MSTP, LM-MSTP-DB

2.12 CONFIGURATION TOOLS

A. A wireless configuration tool facilitates optional customization of DLM local networks using two-way infrared communications, while PC software connects to each local network via a USB interface.

B. Features and functionality of the wireless configuration tool shall include but not be limited to:

1. Two-way infrared (IR) communication with DLM IR-enabled devices within a range of approximately 30 feet.
2. High visibility organic LED (OLED) display, pushbutton user interface and menu-driven operation.
3. Must be able to read and modify parameters for room controllers, occupancy sensors, wall switches, daylighting sensors, network bridges and relay panels, and identify room devices by type and serial number.
4. Save up to eight occupancy sensor setting profiles, and apply profiles to selected sensors.
5. Temporarily adjust light level of any load(s) on the local network, and incorporate those levels in scene setting. Set room mode for testing of Normal Hours (NH) and After Hours (AH) parameter settings.
6. Adjust or fine-tune daylighting settings established during auto-configuration, and input light level data to complete configuration of open loop daylighting controls.
7. Set room mode for testing of Normal Hours (NH) and After Hours (AH) parameter settings.
8. Verify status of building level network devices.

C. WattStopper Product Numbers: LMCT-100, LMCI-100/LMCS-100

2.13 NETWORK BRIDGE

A. The network bridge module connects a DLM local network to a BACnet-compliant segment network for communication between rooms, relay panels and a segment manager or BAS. Each local network shall include a network bridge component to provide a connection to the local network room devices. The network bridge shall use industry standard BACnet MS/TP network communication and an optically isolated EIA/TIA RS-485 transceiver.

1. The network bridge shall be provided as a separate module connected on the local network through an available RJ-45 port.
2. Provide Plug n’ Go operation to automatically discover room devices connected to the local network and make all device parameters visible to the segment manager via the segment

network. No commissioning shall be required for set up of the network bridge on the local network.

3. The network bridge shall automatically create standard BACnet objects for selected room device parameters to allow any BACnet-compliant BAS to include lighting control and power monitoring features as provided by the DLM room devices on each local network. BACnet objects will be created for the addition or replacement of any given in-room DLM device for the installed life of the system. Products requiring that an application-specific point database be loaded to create or map BACnet objects are not acceptable. Systems not capable of providing BACnet data for control devices via a dedicated BACnet Device ID and physical MS/TP termination per room are not acceptable. Standard BACnet objects shall be provided as follows:
   a. Read/write the normal or after hours schedule state for the room
   b. Read the detection state of each occupancy sensor
   c. Read the aggregate occupancy state of the room
   d. Read/write the On/Off state of loads
   e. Read/write the dimmed light level of loads
   f. Read the button states of switches
   g. Read total current in amps, and total power in watts through the room controller
   h. Read/write occupancy sensor time delay, PIR sensitivity and ultrasonic sensitivity settings
   i. Activate a preset scene for the room
   j. Read/write daylight sensor fade time and day and night setpoints
   k. Read the current light level, in footcandles, from interior and exterior photosensors and photocells
   l. Set daylight sensor operating mode
   m. Read/write wall switch lock status
   n. Read watts per square foot for the entire controlled room
   o. Write maximum light level per load for demand response mode
   p. Read/write activation of demand response mode for the room
   q. Activate/restore demand response mode for the room

B. WattStopper product numbers: LMBC-300

2.14 SEGMENT MANAGER

A. For networked applications, the Digital Lighting Management system shall include at least one segment manager to manage network communication. It shall be capable of serving up a graphical user interface via a standard web browser utilizing either unencrypted TCP/IP traffic via a configurable port (default is 80) or 256 bit AES encrypted SSL TCP/IP traffic via a configurable port (default is 443).

B. Each segment manager shall have integral support for at least three segment networks. Segment networks may alternately be connected to the segment manger via external routers and switches, using standard Ethernet structured wiring. Each router shall accommodate one segment network. Provide the quantity of routers and switches as shown on the plans.

C. Operational features of the Segment Manager shall include the following:
   1. Connection to PC or LAN via standard Ethernet TCP/IP via standard Ethernet TCP/IP with the option to use SSL encrypted connections for all traffic.
   2. Easy to learn and use graphical user interface, compatible with Internet Explorer 8, or equal browser. Shall not require installation of any lighting control software to an end-user PC.
   3. Log in security capable of restricting some users to view-only or other limited operations.

4. Automatic discovery of DLM devices and relay panels on the segment network(s). Commissioning beyond activation of the discovery function shall not be required to provide communication, monitoring or control of all local networks and lighting control panels.
5. After discovery, all rooms and panels shall be presented in a standard navigation tree format. Selecting a device from the tree will allow the device settings and operational parameters to be viewed and changed by the user.
6. Ability to view and modify room device operational parameters. It shall be possible to set device parameters independently for normal hours and after hours operation including sensor time delays and sensitivities, and load response to sensor including Manual-On or Auto-On.
7. Ability to set up schedules for rooms and panels, view and override current status of panel channels and relays, and assign relays to groups. Schedules shall automatically set controlled zones or areas to either a normal hours or after hours mode of operation. Support for a minimum of 100 unique schedules, each with up to four time events per day. Support for annual schedules, holiday schedules and unique date-bound schedules.
8. Ability to group rooms and loads for common control by schedules, switches or network commands.
9. Ability to monitor connected load current and display power consumption for areas equipped with room controllers incorporating the integral current monitoring feature.
10. Provide capabilities for integration with a BAS via BACnet protocol. At a minimum, the following points shall be available to the BAS via BACnet IP connection to the segment manager: room occupancy state; room schedule mode; room switch lock control; individual occupancy sensor state; room lighting power; room plug-load power; load ON/OFF state; load dimming level; panel channel schedule state; panel relay state; and Segment Manager Group schedule state control.
11. The Segment Manager shall allow access and control of the overall system database via Native Niagara AX FOX connectivity. Systems that must utilize a Tridium Niagara controller in addition to the programming, scheduling and configuration server are not acceptable.

D. Segment Manager shall support multiple DLM rooms as follows:

1. Support up to 120 network bridges and 900 digital in-room devices (LMSM-3E).
2. Support up to 300 network bridges and 2,200 digital in room devices, connected via network routers and switches (LMSM-6E).

E. WattStopper Product Numbers: LMSM-3E, LMSM-6E, NB-ROUTER, NB-SWITCH, NB-SWITCH-8, NB-SWITCH-16.

2.15 PROGRAMMING, CONFIGURATION AND DOCUMENTATION SOFTWARE

A. PC-native application for optional programming of detailed technician-level parameter information for all DLM products, including all parameters not accessible via BACnet and the handled IR configuration tool. Software must be capable of accessing room-level parameter information locally within the room when connected via the optional LMCI-100 USB programming adapter, or globally for many segment networks simultaneously utilizing standard BACnet/IP communication.

1. Additional parameters exposed through this method include but are not limited to:
   a. Occupancy sensor detection LED disable for performance and other aesthetic spaces where blinking LEDs present a distraction.
   b. Six occupancy sensor action behaviors for each controlled load, separately configurable for normal hours and after hours modes. Modes include: No Action, Follow Off Only, Follow On Only, Follow On and Off, Follow On Only with Override Time Delay, Follow Off Only with Blink Warn Grace Time, Follow On and Off with Blink Warn Grace Time.
   c. Separate fade time adjustments per load for both normal and after hours from 0 - 4 hours.
   d. Configurable occupancy sensor re-trigger grace period from 0 - 4 minutes separate for both normal hours and after hours.
   e. Separate normal hours and after hours per-load button mode with modes including: Do nothing, on only, off only, on and off.

f. Load control polarity reversal so that on events turn loads off and vice versa.

g. Per-load DR (demand response) shed level in units of percent.

h. Load output pulse mode in increments of 1second.

i. Fade trip point for each load for normal hours and after hours that establishes the dimmer command level at which a switched load closes its relay to allow for staggered On of switched loads in response to a dimmer.

2. Generation of reports at the whole file, partial file, or room level. Reports include but are not limited to:

a. Device list report: All devices in a project listed by type.

b. Load binding report: All load controller bindings showing interaction with sensors, switches, and daylighting.

c. BACnet points report: Per room Device ID report of the valid BACnet points for a given site's BOM.

d. Room summary report: Device manifest for each room, aggregated by common BOM, showing basic sequence of operations.

e. Device parameter report: Per-room lists of all configured parameters accessible via hand held IR programmer for use with O&M documentation.

f. Scene report: All project scene pattern values not left at defaults (i.e. 1 = all loads 100%, 2 = all loads 75%, 3 = all loads 50%, 4 = all loads 25%, 5-16 = same as scene 1).

g. Occupancy sensor report: Basic settings including time delay and sensitivity(ies) for all occupancy sensors.

3. Network-wide programming of parameter data in a spreadsheet-like programming environment including but not limited to the following operations:

a. Set, copy/paste an entire project site of sensor time delays.

b. Set, copy/paste an entire project site of sensor sensitivity settings.

c. Search based on room name and text labels.

d. Filter by product type (i.e. LMRC-212) to allow parameter set by product.

e. Filter by parameter value to search for product with specific configurations.

4. Network-wide firmware upgrading remotely via the BACnet/IP network.

a. Mass firmware update of entire rooms.

b. Mass firmware update of specifically selected rooms or areas.

c. Mass firmware upgrade of specific products.

B. WattStopper Product Number: LMCS-100, LMCI-100

2.16 LMCP LIGHTING CONTROL PANELS

A. Provide lighting control panels in the locations and capacities as indicated on the plans and schedules. Each panel shall be of modular construction and consist of the following components:

1. Enclosure/Tub shall be NEMA 1, sized to accept an interior with 1 - 8 relays, 1 - 24 relays and 6 four-pole contactors, or 1 - 48 relays and 6 four-pole contactors.

2. Cover shall be configured for surface or flush wall mounting of the panel as indicated on the plans. The panel cover shall have a hinged and lockable door with restricted access to line voltage section of the panel.

3. Interior assembly shall be supplied as a factory assembled component specifically designed and listed for field installation. The interior construction shall provide total isolation of high voltage (Class 1) wiring from low voltage (Class 2) wiring within the assembled panel. The interior assembly shall include intelligence boards, power supply, DIN rails for mounting optional Class 2

control devices, and individually replaceable latching type relays. The panel interiors shall include the following features:

a. Removable, plug-in terminal blocks with connections for all low voltage terminations.

b. Individual terminal block, override pushbutton, and LED status light for each relay.

c. Direct wired switch inputs associated with each relay shall support 2-wire momentary switches only.

d. Digital inputs (four RJ-45 jacks) shall support 1-, 2-, 3-, 4-, and 8-button digital switches; digital IO modules capable of receiving 0-5V or 0-10V analog photocell inputs; digital IO modules capable of receiving momentary or maintained contact closure inputs or analog sensor inputs; digital daylighting sensors; and digital occupancy sensors. Inputs are divided into two separate digital networks, each capable of supplying 250mA to connected devices.

e. True relay state shall be indicated by the on-board LED and shall be available to external control devices and systems via BACnet.

f. Automatically sequenced operation of relays to reduce impact on the electrical distribution system when large loads are controlled simultaneously.

g. Group and pattern control of relays shall be provided through a simple keypad interface from a handheld IR programmer. Any set of relays can be associated with a group for direct on/off control or pattern (scene) control via a simple programming sequence using the relay override pushbuttons and LED displays for groups 1-8 or a handheld IR programmer for groups 1-99.

h. Relay group status for shall be provided through LED indicators for groups 1-8 and via BACnet for groups 1-99. A solid LED indicates that the last group action called for an ON state and relays in the group are on or in a mixed state.

i. Single-pole latching relays with modular plug-in design. Relays shall provide the following ratings and features:

1) Electrical:

a) 30 amp ballast at 277V

b) 20 amp ballast at 347V

c) 20amp tungsten at 120V

d) 30 amp resistive at 347V

e) 1.5 HP motor at 120V

f) 14,000 amp short circuit current rating (SCCR) at 347V

g) Relays shall be specifically UL 20 listed for control of plug-loads

2) Mechanical:

a) Replaceable, ½" KO mounting with removable Class 2 wire harness.

b) Actuator on relay housing provides manual override and visual status indication, accessible from Class 2 section of panel.

c) Dual line and load terminals each support two #14 - #12 solid or stranded conductors.

d) Tested to 300,000 mechanical on/off cycles.

4. Isolated low voltage contacts provide for true relay status feedback and pilot light indication.

5. Power supply shall be a multi-voltage transformer assembly with rated power to supply all electronics, occupancy sensors, switches, pilot lights, and photocells as necessary to meet the project requirements. Power supply to have internal over-current protection with automatic reset and metal oxide varistor protection.

6. Where indicated, lighting control panels designated for control of emergency lighting shall be provided with factory installed provision for automatic by pass of relays controlling emergency circuits upon loss of normal power. Panels shall be properly listed and labeled for use on emergency lighting circuits and shall meet the requirements of UL924 and NFPA 70 - Article 700.

7. Integral system clock shall provide scheduling capabilities for panel-only projects without DLM segment networks or BAS control.
    a. Each panel shall include digital clock capability able to issue system wide automation commands to up to (11) eleven other panels for a total of (12) twelve networked lighting control panels. The clock shall provide capability for up to 254 independent schedule events per panel for each of the ninety-nine system wide channel groups.
    b. The clock capability of each panel shall support the time-based energy saving requirements of applicable local energy codes.
    c. The clock module shall provide astronomic capabilities, time delays, blink warning, daylight savings, and holiday functions and will include a battery back up for the clock function and program retention in non-volatile FLASH memory. Clocks that require multiple events to meet local code lighting shut off requirements shall not be allowed.
    d. The clock capability of each panel shall operate on a basis of ON/OFF or Normal Hours/After Hours messages to automation groups that implement pre-configured control scenarios. Scenarios shall include:
        1) Scheduled ON / OFF
        2) Manual ON / Scheduled OFF
        3) Astro ON / OFF (or Photo ON / OFF)
        4) Astro and Schedule ON / OFF (or Photo and Schedule ON / OFF)
    e. The user interface shall be a portable IR handheld remote control capable of programming any panel in the system (LMCT-100)
    f. The clock capability of each panel shall employ non-volatile memory and shall retain user programming and time for a minimum of 10 years.
    g. Schedules programmed into the clock of any one panel shall be capable of executing panel local schedule or Dark/Light (photocell or Astro) events for that panel in the event that global network communication is lost. Lighting control panels that are not capable of executing events independently of the global network shall not be acceptable.
8. The lighting control panel can operate as a stand-alone system, or can support schedule, group, and photocell control functions, as configured in a Segment Manager controller, via a segment network connection.
9. The lighting control panel shall support digital communications to facilitate the extension of control to include interoperation with building automation systems and other intelligent field devices. Digital communications shall be RS485 MS/TP-based using the BACnet® protocol.
    a. The panel shall have provision for an individual BACnet device ID and shall support the full 2^22 range (0 – 4,193,304). The device ID description property shall be writable via the network to allow unique identification of the lighting control panel on the network.
    b. The panel shall support MS/TP MAC addresses in the range of 0 – 127 and baud rates of 9600k, 38400k, 76800k, and 115.2k bits per second.
    c. Lighting control relays shall be controllable as binary output objects in the instance range of 1 - 64. The state of each relay shall be readable and writable by the BAS via the object present value property.
    d. Lighting control relays shall report their true on/off state as binary input objects in the instance range of 1 – 64.
    e. The 99 group Normal Hours/After Hours control objects associated with the panel shall be represented by binary value objects in the instance range of 201 - 299. The occupancy state of each channel group shall be readable and writable by the BAS via the object present value property. Commanding 1 to a channel group will put all relays associated with the channel into the normal hours mode. Commanding 0 or NULL shall put the relays into the after hours mode.
    f. Setup and commissioning of the panel shall not require manufacturer-specific software or a computer. All configuration of the lighting control panel shall be performed using standard

BACnet objects or via the handheld IR programming remote. Provide BACnet objects for panel setup and control as follows:

1) Binary output objects in the instance range of 1 - 64 (one per relay) for on/off control of relays.

2) Binary value objects in the instance range of 1 - 99 (one per channel) for normal hours/after hours schedule control.

3) Binary input objects in the instance range of 1 - 64 (one per relay) for reading true on/off state of the relays.

4) Analog value objects in the instance range of 101 - 199 (one per channel group) shall assign a blink warn time value to each channel. A value of 5 shall activate the blink warn feature for the channel and set a 5-minute grace-time period. A value of 250 shall activate the sweep feature for the channel and enable the use of sweep type automatic wall switches.

g. The description property for all objects shall be writable via the network and shall be saved in non-volatile memory within the panel.

h. The BO and BV 1 - 99 objects shall support BACnet priority array with a relinquish default of off and after hours respectively. Prioritized writes to the channel BV objects shall propagate prioritized control to each member relay in a way analogous to the BACnet Channel object described in addendum aa. (http://www.bacnet.org/Addenda/Add-135-2010aa.pdf)

i. Panel-aggregate control of relay Force Off at priority 2 shall be available via a single BV5 object. Force On at priority 1 shall be available via a single BV4 object.

j. Lockout of all digital switch buttons connected to a given panel shall be command-able via a single BV2 object. The lock status of any connected switch station shall be represented as BV101-196.

10. WattStopper Product Number: LMCP8, LMCP24 or LMCP48

B. USER INTERFACE

1. Each lighting control panel system shall be supplied with at least (1) handheld configuration tool (LMCT-100). As a remote programming interface the configuration tool shall allow setup, configuration, and diagnostics of the panel without the need for software or connection of a computer. The user interface shall have the following panel-specific functions as a minimum:

a. Set network parameters including panel device ID, MS/TP MAC address, baud rate and max master range.

b. Relay Group creation of up to 99 groups. Group creation shall result in programming of all seven key relay parameters for member relays. The seven parameters are as follows: After-hours Override Time Delay, Normal Hours Override Time Delay, Action on Transition to Normal Hours, Action on Transition to After Hours, Sensor Action During Normal Hours, Sensor Action During After Hours, Blink-Warn Time for After Hours.

c. Program up to 254 separate scheduled events. Events shall occur on seven day intervals with each day selectable as active or inactive, and shall be configurable as to whether the event is active on holidays. Holidays are also defined through the User Interface.

d. Program up to 32 separate Dark/Light events. Events shall have a selectable source as either calculated Astro with delay, or a digital IO module with an integral 0-5V or 0-10V analog photocell. Dark/Light events shall occur on seven day intervals with each day selectable as active or inactive, and shall be configurable as to whether the event is active on holidays.

e. Button binding of digital switches to groups shall be accessible via the handheld IR remote and accomplished from the digital switch station.

f. Programming of panel location information shall be accomplished by the handheld IR remote and include at a minimum LAT, LON, DST zone, and an approximate city/state location.

g. An additional handheld IR remote may optionally be specified to be permanently mounted to the panel interior via a retractable anti-theft lanyard to allow for convenient programming of

the panel while assuring that the handheld programmer is always present at that panel. An unlimited number of handheld IR remotes may also be purchased for facilities staff as determined by the end user's representative.

2. WattStopper Product Number: LMCT-100

2.17 EMERGENCY LIGHTING CONTROL DEVICES

A. Emergency Lighting Control Unit – A UL 924 listed device that monitors a switched circuit providing normal lighting to an area. The unit provides normal ON/OFF control of emergency lighting along with the normal lighting. Upon normal power failure the emergency lighting circuit will close, forcing the emergency lighting ON until normal power is restored. Features include:

1. 120/277 volts, 50/60 Hz, 20 amp ballast rating
2. Push to test button
3. Auxiliary contact for remote test or fire alarm system interface

2.18 WATTSTOPPER PRODUCT NUMBERS: ELCU-100, ELCU-200.

PART 3 -EXECUTION

3.1 INSTALLATION

A. Work shall be installed as shown on the Drawings in accordance with the manufacturer's diagrams and recommendations, except where otherwise indicated.

B. Contractor shall provide initial setup and programming for all devices and software installed under this Section for a complete and operational system. System interfaces shall be coordinated with Owner, where appropriate.

C. All cable runs shall comply with the requirements of this Division and manufacturer's specifications, and shall be continuous between devices and equipment. All control cabling shall meet CEC/NEC 725 or 800 as required and be UL listed for its application.

D. Set sensor's time delays and sensitivity adjustments in accordance to manufacturer's guidelines and Owner's direction.

E. Provide appropriate power pack for each ceiling or wall mounted occupancy sensor, whether shown or not on Drawings, unless otherwise noted.

F. Locate photoelectric switches (photocell), when required, at one of the following locations with a northern or western exposure:

1. Route ½" conduit to roof and penetrate deck and locate +18" above finish floor. Seal penetration per Specifications.
2. Route ½" conduit to nearest service or support exterior doorway and mount +8" above door frame in a flush weatherproof outlet box.

G. Orient photocell toward north. If northern orientation cannot be obtained, orient the device west.

H. Provide the following items for a complete and operational low voltage lighting control system as required by the manufacturer's specifications:

1. Auxiliary cabinets and boxes for all modules and devices not mounted within relay panel.
2. Install network modules and repeaters necessary to extend the dataline to all modules and devices within the network as required by manufacturer's specifications.
3. Provide ADIMs of sufficient quantities to connect all analog devices shown on Drawings.
4. Coordinate interface with BMS/BAS with other trades and vendors to provide functionality contained herein (i.e., time clock scheduling and relay status).
5. All low voltage cables between system components, sensors and input devices shall meet manufacturer's specifications.

I. Contractor shall coordinate programming of time clock schedules and relay groups not shown in Drawings with Owner.

3.2 FIELD QUALITY CONTROL

A. The Contractor shall demonstrate the system functionality to manufacturer's specifications and requirements after completion of installation.

B. The Engineer or Owner may order any changes, adjustments or further tests deemed necessary to assure that the system and its components are complete and operational in accordance with the Specifications.

3.3 ADJUSTING

A. After 60 days of Owner occupancy provide labor to adjust time delays and sensitivity adjustments on each occupancy and photocell sensor.

3.4 DEMONSTRATION

A. The Contractor shall properly instruct the Owner to the operational procedures of the system.

B. Within the first 30 days from system startup, the equipment supplier shall provide no less than four (4) hours for instruction and training.

END OF SECTION

CONFORMED

SECTION 26 23 50

PHOTOVOLTAIC SYSTEM

PART 1 - GENERAL

1.1 SUMMARY

A. Section includes

1. Provide all labor, materials and equipment necessary to complete the installation required for the items specified under this Section, including but not limited to photovoltaic system, solar electric modules, string combiners, sub-combiners and inverters.

B. Related sections

1. Where items specified in other Division 26 sections conflict with the requirements of this Section, the most stringent requirement shall govern.
    a. 26 05 26 – Grounding and Bonding for Electrical Systems
    b. 26 05 19 – Low Voltage Power Conductors and Cables
    c. 26 05 33 – Raceways and Boxes
    d. 26 28 11 – Overcurrent Protection Devices
2. The requirements of this Section apply to all Division 26 work, as applicable.
3. Consult all other sections, determine the extent and character of related work and properly coordinate work specified herein with that specified elsewhere to produce a complete installation.

1.2 REFERENCES

A. Comply with the latest edition of the following applicable specifications and standards except as otherwise shown or specified:

1. CCR –California Code of Regulations, Title 24
    a. Part 3 -California Electrical Code(CEC); NFPA 70 National Electrical Code (NEC) with California amendments
2. NEMA –National Electrical Manufacturer’s Association
    a. KS 1; Enclosed Switches
    b. 250; Enclosures for Electrical Equipment
3. UL -Underwriters Laboratories, Inc.
    a. 98; Enclosed and Dead Front Switches
    b. 790; Standard Test Methods for Fire Tests of Roof Coverings
    c. 1703; Standard for Flat-Plate Photovoltaic Modules and Panels
    d. 1741; Static Inverters and Charge Controllers for Use in Photovoltaic
4. Power Systems.

5. IEC - International Electrical Commission
    a. 61215; International Standard (Extended Version) - Crystalline silicon terrestrial photovoltaic (PV) modules - Design qualification and type approval.
    b. 61730-1; International Standard - Photovoltaic (PV) module safety qualification - Part 1 - Requirements for construction

c. 61730-2; International Standard - Photovoltaic (PV) module safety qualification - Part 2 - Requirements for testing.

1.3 SYSTEM DESCRIPTION

A. These specifications cover the system design, procurement of equipment, hardware, documentation, labor and supervision required for the installation of grid-connected PV System. There will be no energy storage devices (e.g. batteries) used in these systems.

B. The PV system shall comply with the PBI (Performance-Based Incentive Program) of the California Solar Initiative (CSI).

C. The PV system is a complete system and, as such, substitution of any part of the design could affect the performance and therefore the predicted output of the system. The projected performance is based on the design as shown on the associated drawings. The components of the system fit together based on physical size and weights of the modules, module output and electrical characteristics, inverter capacity, shading obstructions, etc. Contractor substitutions of any component will require an engineered re-design proving equivalent performance, to be reviewed by the Engineer.

D. The system design shall consist of the arrays, combiner boxes, DC fused disconnects, inverters, AC fused disconnects, customer-generated output meter, utility required disconnect, surge protection, and point of connection.

E. System point of connection:

1. System point of connection is shown on the Drawings.

1.4 QUALIFICATIONS OF SYSTEM INSTALLER

A. Submit qualification of system installer for approval based on the following minimum criteria:

1. Successful experience in at least five comparable installations which have been in operation for a period of not less than three years. Furnish a list of jobs and locations, with contact name and phone number.

2. Maintain a fully staffed and equipped maintenance and repair operation within 90 miles of the job site with the ability to provide emergency restoration service within 24 hours.

3. All installers shall be trained and experienced in PV systems.

4. Meet the criteria for installer as required by the California Solar Initiative as well as a California C-10 Electrical contractor's license.

1.5 SUBMITTALS

A. Submit manufacturer’s data for materials specified within this Section in accordance to Section 26 05 00.

1.6 QUALITY ASSURANCE

A. All materials, equipment and parts comprising the materials specified herein shall be new and unused, bearing UL labels where applicable.

1.7 DELIVERY, STORAGE AND HANDLING

A. Handle carefully to avoid damage to internal components, enclosure and finish.

B. Store in a clean, dry environment. Maintain factory packaging and, if required, provide an additional cover to protect enclosure in harsh environments.

1.8 DEFINITIONS

A. Array: A mechanically integrated assembly of modules or panels with a support structure or foundation to form a direct current power producing unit.

B. Combiner Box: A junction box used to combine the output of multiple modules or panels or arrays AND where each string or source circuit is fused, monitored and can be disconnected.

C. Inverter: Equipment that is used to change voltage level or waveform or both, of electrical energy. Also, know as a power conversion system (PCS) and is used to change Direct current (DC) to alternating current (AC).

D. Module: A complete, environmentally protected unit consisting of solar cells and other components designed to generate DC current when exposed to sunlight.

E. Source Circuit: A circuit from a module or group of modules that are wired together to form a single DC circuit (see string). Source circuits can be combined to provide a single circuit of greater size or power output.

F. STC rating: The rating of solar modules "Standard Test Conditions".

G. String: A group of modules wired together to form a single circuit and provide a source circuit.

PART 2 - PRODUCTS

2.1 SOLAR ELECTRIC MODULES

A. Manufacturers
   1. Motech or approved equal.

B. Model IM60C3-260-A10B50
   1. STC Peak Power Rating:
      a. 260 W
   2. NOCT Peak Power Rating:
      a. 190 W
   3. Voltage at Maximum Power (Vmpp):
      a. STC
         1) 31.06 Volts
      b. NOCT
         1) 28.20 Volts
   4. Current at Maximum Power (Impp):
      a. STC
         1) 8.37 Amps
      b. NOTC
         1) 6.73 Amps
   5. Open Circuit Voltage (Voc):
      a. STC
         1) 37.76 Volts
      b. NOTC
         1) 34.77 Volts
   6. Short Circuit Current (Isc):

CONFORMED

a. STC
    1) 8.93 Amps
b. NOTC
    1) 7.24 Amps

7. Cell Type:
    a. Multicrystalline
8. Maximum System Voltage:
    a. 1000 Volts (IEC)
    b. 1000 Volts (UL)
9. Dimensions:
    a. Panel: 65.0 x 37.1 x 1.97 in
10. Mounts:
    a. Standing seam, non-penetrating.
11. Connectors:
    a. H4 Connectors (MC4 Compatible)
    b. 4.0mm^2 Universal PV Wire, 39 in. cable
12. Max Series Fuse Rating:
    a. 15.0 Amps
13. Normal Operating Cell Temperature (NOCT):
    a. 46 degrees C

2.2 STRING COMBINER

A. Manufacturers
    1. Solectria Renewables or approved equal.
B. Model STRCOM
    1. Input Wire Range:
        a. 14 – 6 AWG
    2. Output Wire Range:
        a. 4 AWG – 250kcmil
    3. Maximum Voltage:
        a. 600 Volts DC
    4. Maximum Current:
        a. 60-180 Amps
    5. Fuse Range:
        a. 6 Amps
        b. 8 Amps
        c. 10 Amps
        d. 12 Amps
        e. 15 Amps

f. 20 Amps

6. Operating Temperature:
   a. -13 degrees F to +122 degrees F
7. Enclosure:
   a. Dimensions (H x W x D): 24 in. x 20 in. x 6.75 in.
   b. Weight: 40 lbs
   c. Enclosure rating: NEMA 4
   d. Enclosure Finish: Polyester powder coated steel

2.3 COMMERCIAL GRID-TIE INVERTER

A. Manufacturers
   1. Solectria Renewables or approved equal.
B. Model PVI 14TL
   1. DC Input:
      a. Maximum Open Circuit Voltage:
         1) 600 Volts DC
      b. Operating Voltage Range:
         1) 180 – 580 Volts DC
      c. Maximum Power Input Voltage Range:
         1) 300 – 540 Volts DC
      d. Maximum Operating Input Current:
         1) 25 Amps per MPPT (50 Amps)
      e. Maximum Short Circuit Current:
         1) 45 Amps per MPPT (90 Amps)
      f. Maximum PV Power (per MPPT):
         1) 9.5 kW
   2. AC Output:
      a. Nominal Output Voltage:
         1) 208 Volts AC, 3 Phase
      b. AC Voltage Range:
         1) -12%/+10%
   3. Continuous Output Power:
      a. 14 kW
   4. Continuous Output Current:
      a. 208 Volts AC
         1) 39 Amps
   5. Maximum Backfeed Current:
      a. 0 Amps
   6. Nominal Output Frequency:

CONFORMED

a. 60 Hz

7. Output Frequency Range:
   a. 59.3 – 60.5 Hz
8. Power Factor:
   a. Unity,>0.99
9. Total Harmonic Distortion (THD):
   a. <3%
10. Peak Efficiency:
    a. 96.9%
11. CEC Efficiency:
    a. 96.0%
12. Tare Loss:
    a. 4 Watts
13. Enclosure Rating:
    a. Type 4
14. Dimensions (H x W x D):
    a. 41.6 in. x 21.4 in. x 8.5 in
15. Enclosure Finish:
    a. Polyester powder coated aluminum
16. AC/DC Disconnects:
    a. Fully integrated

PART 3 - EXECUTION

3.1 INSTALLATION

A. The equipment shall be installed per the manufacturer's recommendations.

B. Electrical installation shall conform to the requirements of CEC and IEEE C2 and to requirements specified herein.

3.2 PV CONDUCTORS

A. All wiring shall be copper and have insulation listed for operation at 600 volts and temperature rating of 90 degrees C in wet locations. Where used on DC circuits, the conductors shall be "-2" rated for continuous operation at 90 degrees C. but the conductors shall not be used at greater than the 75 degree rating of that conductor. All current carrying conductors shall be enclosed in conduit, including module interconnections. Exception: Where indicated on the drawings, the wiring for module interconnections may be run in Free Air and shall be sunlight and UV resistant.

B. All grounded D.C. conductors installed in free air and of sunlight resistant insulation shall be identified with white marking by use of tape or paint. All grounded D.C. conductors installed in conduit shall have a white insulation or be identified with white tape or paint in compliance with CEC 200.6 (A)(2).

3.3 WIRING AND TERMINATIONS

A. All series connected strings of modules (also known as source circuits) shall include a series fuse as required by cEC article 690. Parallel connections of modules in individual source circuits are not permitted.

B. All terminations shall use listed box terminal or compression type connections. Twist on wire splices, crimped, soldered or taped connections are not permitted for the required field installed wiring. Proper torque specifications shall be provided for all of the required field connections.

3.4 GROUNDING AND BONDING

A. All module frames, panel/array support structures, metal enclosures, panel boards and the inverter cabinet should be provided with connections for bonding to common equipment grounding conductor and terminating at the grounding conductor of the distribution equipment they are terminated in. Under no circumstances shall there be multiple connections to ground for current carrying conductors in the system.

B. System arrangement shall comply with the Utility Company requirements. A licensed electrician must make all final connections.

3.5 GENERAL

A. Contractor shall provide nameplates on all electrical equipment.

1. Product Description: Engraved three-layered, laminated plastic nameplates, white letters on red background.
2. Letter Size: 1/4 inch and 1/8 inch as indicated on the plans.
3. All nameplates as required by Article 690 Solar Photovoltaic Systems shall be installed in addition to the requirements of the utility company.
4. Provide a permanent plaque at the building electrical service entrance indicating locations of all alternate power source disconnects. Plaque shall be approved by Utility Company and Fire Department.

3.6 TESTING AND COMMISSIONING

A. Before start up, the PV system shall be tested by the Contractor and witnessed by the City according to the following test criteria. Results of all inspections, tests, and subsequent corrective action taken or to be taken shall be documented and provided to the Owner.

1. Visual inspection to make sure system is installed to code and in a workmanlike manner. A photo-record shall be made by Contractor including the PV array, inverter, disconnect switches, combiner boxes and connections.
2. Visual inspection of PV array to insure that all PV modules are free from defects, installed properly and are in like new condition.
3. Verify proper wire connections/polarities/phase sequencing to and from all equipment as appropriate.
4. The following parameters shall be measured and recorded on a clear sunny day between the hours of 11:00 am and 1:00 pm.
    a. AC line voltage output of the inverter.
    b. Maximum power output of the inverter.
    c. Open-circuit voltage of all source circuits (measured at DC combiner box)
    d. Max-power current of all source circuits (measured at DC combiner box)
    e. PV array max-power voltage (measured at DC disconnect)
    f. PV array max-power current (measured at DC disconnect)
    g. 3-phase power output measured at utility side of inverter

B. Training and start-up: Within one week of approval for interconnection by the Utility Company, Contractor shall start system up and conduct training of selected City personnel covering the following items:

1. Overall system operation
2. Indicate each major component and discuss its function (PV Array, Combiner box, DC disconnect, inverter, kWh meter, AC disconnect)
3. Start-up procedure
4. System operation
5. System shutdown procedure
6. Inverter error message/codes
7. Possible system faults
8. System troubleshooting procedure

3.7 RELATED DOCUMENTS

A. Furnish electrical schematics and diagrams showing all major components and devices, including conductor type and sizes, connections of individual modules and array source circuits, terminations at junction boxes, connection to surge suppression devices and the PCS, and the PCS interface with the utility grid.

B. Furnish complete parts lists, including all electrical components, mechanical hardware and other equipment required for installing the systems (must include description and make for all the equipment provided, model/part number and source are also required for the PV modules and the inverter).

C. Furnish mechanical drawings showing details of module/array mechanical support.

D. Furnish complete assembly and installation instructions for mounting array, junction boxes and enclosures, routing conduit, wiring arrays, and terminating conductors at array, combiner boxes and PCS.

E. Provide required PV Solar Systems warning signs and markings per CEC Article 690.

3.8 FIELD QUALITY CONTROL

A. Inspect complete installation prior to energizing for physical damage, proper alignment, anchorage and grounding.

B. Check tightness of bolted connections per manufacturer’s written specifications.

END OF SECTION

CONFORMED

SECTION 26 24 13

SWITCHBOARDS

PART 1 - GENERAL

1.1 SUMMARY

A. Section includes

1. Provide all labor, materials and equipment necessary to complete the installation required for the items specified under this Section, including but not limited to switchboards and large distribution panels.

B. Related sections

1. Where items specified in other Division 26 sections conflict with the requirements of this Section, the most stringent requirement shall govern.
    a. 26 05 26 – Grounding and Bonding for Electrical Systems
    b. 26 28 11 – Overcurrent Protection Devices
2. The requirements of this Section apply to all Division 26 work, as applicable.
3. Consult all other sections, determine the extent and character of related work and properly coordinate work specified herein with that specified elsewhere to produce a complete installation.

1.2 REFERENCES

A. Comply with the latest edition of the following applicable specifications and standards except as otherwise shown or specified:

1. ANSI - American National Standards Institute
    a. C12.16; Solid State Electricity Metering
    b. C57.13; Instrument Transformers
2. CCR –California Code of Regulations, Title 24
    a. Part 3 -California Electrical Code(CEC); NFPA 70 National Electrical Code (NEC) with California amendments
3. Federal Specification
    a. W-C-37; Circuit Breakers, Molded Case, Branch Circuit And Service
4. NECA –National Electrical Contractors Association
    a. 400, Recommended Practice for Installing and Maintaining Switchboards
5. NEMA –National Electrical Manufacturer’s Association
    a. AB 1; Molded Case Circuit Breakers and Molded Case Switches
    b. KS; Fused and Non-fused Switches
    c. PB 2; Deadfront Distribution Switchboards, File E8681
    d. PB 2.1; Proper Handling, Installation, Operation and Maintenance of Deadfront Switchboards Rated 600 Volts or Less
    e. PB 2.2; Application Guide for Ground Fault Protective Devices for Equipment
6. UL -Underwriters Laboratories, Inc.
    a. UL 50; Cabinets and Boxes
    b. UL 98; Enclosed and Dead Front Switches
    c. UL 489; Molded Case Circuit Breakers

d. UL 891; Dead-Front Switchboards

e. UL 943; Ground Fault Circuit Interrupters

f. UL 977; Fused Power Circuit Devices

1.3 SUBMITTALS

A. Submit manufacturer's data for materials specified within this Section in accordance to Section 26 05 00.

B. Shop Drawings shall indicate front and side enclosure elevations with overall dimensions shown; conduit entrance locations and requirements; nameplate legends; one-line diagrams; equipment schedule; and switchboard instrument details.

1.4 QUALITY ASSURANCE

A. All materials, equipment and parts comprising the materials specified herein shall be new and unused, bearing UL labels where applicable.

B. The manufacturing facility shall be registered by Underwriters Laboratories Inc. to the International Organization for Standardization ISO 9002 Series Standards for quality.

C. Installation shall conform to NECA 400-1998, Recommended Practice for Installing and Maintaining Switchboards unless otherwise specified.

1.5 DELIVERY, STORAGE AND HANDLING

A. Deliver, store, protect, and handle products in conformance with manufacturer's recommended practices as outlined in applicable Installation and Maintenance Manuals.

B. Each switchboard section shall be delivered in individual shipping splits for ease of handling. They shall be individually wrapped for protection and mounted on shipping skids.

C. Store in a clean, dry space. Maintain factory protection and/or provide an additional heavy canvas or heavy plastic cover to protect structure from dirt, water, construction debris, and traffic. Where applicable, provide adequate heating within enclosures to prevent condensation.

D. Handle in accordance with NEMA PB 2.1 and manufacturer's written instructions. Lift only by lifting means provided for this express purpose. Handle carefully to avoid damage to switchboard internal components, enclosure, and finish.

PART 2 -PRODUCTS

2.1 MANUFACTURERS

A. Square D, Cutler-Hammer or approved equal.

2.2 MATERIAL

A. General

1. Utility Metering Compartment: The utility current transformer compartment shall be connected for hot sequence metering. The compartment shall comply with EUSERC and/or the local utility company specifications.

2. Switchboards shall be rated with a minimum short circuit current rating at listed voltage as shown on Drawings.

3. All unused spaces provided, unless otherwise specified, shall be fully bussed and equipped for future devices, including all appropriate connectors and mounting hardware.

4. Enclosure shall be of NEMA type shown on Drawings.

5. Sections shall be aligned front and rear.

6. Sections shall be aligned front and rear.

7. The switchboard frame shall be of formed steel rigidly bolted together to support all cover plates, bussing and component devices during shipment and installation.
8. Each switchboard section shall have an open bottom and an individually removable top plate for installation and termination of conduit.
9. The switchboard enclosure shall be painted on all exterior surfaces. The paint finish shall be a medium gray, ANSI #49, applied by the electro-deposition process over an iron phosphate pre-treatment.
10. All front covers shall be screw removable with a single tool and all doors shall be hinged with removable hinge pins.
11. Top and bottom conduit areas shall be clearly indicated on shop drawings.
12. Provide 1" high by 3" wide engraved laminated nameplates for each device. Furnish black letters on a white background for all voltages.
13. Bus Composition shall be plated copper. Plating shall be applied continuously to all bus work. The switchboard bussing shall be of sufficient cross-sectional area to meet UL 891 temperature rise requirements. The phase and neutral through-bus shall have an ampacity as shown in the plans. For 4-wire systems, the neutral shall be of equivalent ampacity as the phase bus bar. Tapered bus is not acceptable. Full provisions for the addition of future sections shall be provided. Bussing shall include all necessary hardware to accommodate splicing for future additions.
14. Bus Connections shall be bolted with Grade 5 bolts and conical spring washers.
15. Ground Bus shall be sized per CEC/NEC and UL 891 Tables 25.1 and 25.2 and shall extend the entire length of the switchboard. Provisions for the addition of future sections shall be provided.
16. Square-D I-Line or equivalent distribution bussing with the following characteristics where so noted on Drawings.
    a. Circuit breaker(s) shall be group mounted plug-on with mechanical restraint on a common pan or rail assembly, facilitating ease of installation of future devices.
    b. The interior shall have three bus bars stacked and aligned vertically with glass reinforced polyester insulators laminated between phases. The molded polyester insulators shall support and provide phase isolation to the entire length of bus., providing side-by-side mounting of breakers.
    c. Circuit breaker(s) equipped with line terminal jaws shall not require additional external mounting hardware. Circuit breaker(s) shall be held in mounted position by a self-contained bracket secured to the mounting pan by fasteners. Circuit breaker(s) of different frame sizes shall be capable of being mounted across from each other.
    d. Line-side circuit breaker connections are to be jaw type, whereby clamping forces are increased under faulted conditions.
    e. All unused spaces provided, unless otherwise specified, shall be fully equipped for future devices, including all appropriate connectors and mounting hardware.

B. Incoming main devices shall of type and accessories as shown on Drawings.
    1. Circuit Breakers
        a. Circuit breaker shall be of type, rating and poles shown on Drawings per Section 26 28 11 – Overcurrent Protection Devices.
    2. Fusible Switches
        a. Single main group mounted through 800 A.
        b. Fusible main switch shall be group mounted plug-on with mechanical restraint. No additional hardware shall be required to mount the fusible switch into the switchboard.
        c. Switch shall have dual cover interlocks designed to prevent the opening of the cover when the switch is ON. The cover interlock shall prevent the switch from being turned ON with the cover open. Interlock may be manually overridden for testing purposes. Switch cover shall

include a means by which the cover can be padlocked in the closed position. The operating handle shall feature positive lock-off means by providing provisions for (3) 0.375" padlocks.

d. Load side fusible switch connections shall be jaw type.

3. Incoming Lug Only (Distribution only, non-service entrance)

a. Incoming conductors shall terminate at lug landing pads rated per Drawings.

b. All lugs shall be UL Listed to accept solid and/or stranded copper conductors only. Lugs shall be suitable for 90° C rated wire, sized according to the 75° C temperature rating in the NEC.

c. Provide compression type lugs to accommodate the conductor shown on the associated drawings.

C. Distribution section devices shall of type and accessories as shown on Drawings.

1. Group mounted or individually mounted as shown on Drawings.

2. All circuit breakers shall be installed in a twin mount configuration where allowed by the manufacturer with prepared space unless otherwise noted.

3. All distribution circuit breakers shall be thermal-magnetic molded case, unless otherwise noted on Drawings.

4. Circuit breaker shall be of type, rating and poles shown on Drawings per Section 26 28 11 – Overcurrent Protection Devices.

PART 3 -EXECUTION

3.1 EXAMINATION

A. Examine switchboard to provide adequate clearances for installation.

B. Check that concrete pads are level and free of irregularities.

C. Begin work only after unsatisfactory conditions are corrected.

3.2 INSTALLATION

A. Install switchboard in location shown on Drawings, in accordance with manufacturer's written instructions and NEMA PB 2.1. Anchor to resist seismic forces as indicated on Drawings and in accordance with OSHPD's anchorage requirements. Provide all testing and inspections requirements by inspecting authority.

B. Installation shall conform to NECA 400 where not specified under this Division.

C. Tighten accessible bus connection and mechanical fasteners after placing switchboard.

3.3 FIELD QUALITY CONTROL

A. Obtain the services of an independent testing company who shall provide quality control and adjustments as well as tests.

B. Inspect complete installation for physical damage, proper alignment, anchorage and grounding prior to energizing.

C. Measure the insulation resistance of each bus section phase-to-phase and phase-to-ground for one minute each at 1000Vdc; acceptable insulation resistance is 1 megaohm. Also, refer to manufacturer's specifications for specific testing procedures and values.

D. Check tightness of accessible bolted bus joints using a calibrated torque wrench per manufacturer's specifications.

E. Physically test key interlock systems to check for proper functionality.

F. Test ground fault systems by push-to-test button.

G. Check and set where required all protective device settings in accordance with approved coordination study settings and conduct ground fault acceptance tests.

CONFORMED

3.4 ADJUSTING

A. Adjust all operating mechanisms for free mechanical movement per manufacturer's specifications.

B. Tighten bolted bus connections in accordance with manufacturer's instructions.

C. Adjust circuit breaker trip and time delay settings to values indicated by Engineer.

D. Main circuit breaker ground fault setting shall be per CEC/NEC 230-95(a).

3.5 CLEANING

A. Touch up scratched or marred surfaces to match original finish

END OF SECTION

CONFORMED

SECTION 26 24 16

PANELBOARDS

PART 1 - GENERAL

1.1 SUMMARY

A. Section includes

1. Provide all labor, materials and equipment necessary to complete the installation required for the items specified under this Section, including but not limited to panelboards.

B. Related sections

1. Where items specified in other Division 26 sections conflict with the requirements of this Section, the most stringent requirement shall govern.
    a. 26 05 26 – Grounding and Bonding for Electrical Systems
    b. 26 28 11 – Overcurrent Protection Devices
2. The requirements of this Section apply to all Division 26 work, as applicable.
3. Consult all other sections, determine the extent and character of related work and properly coordinate work specified herein with that specified elsewhere to produce a complete installation.

1.2 REFERENCES

A. Comply with the latest edition of the following applicable specifications and standards except as otherwise shown or specified:

1. CCR –California Code of Regulations, Title 24
    a. Part 3 -California Electrical Code(CEC); NFPA 70 National Electrical Code (NEC) with California amendments
2. Federal Specification
    a. W-C-375; Circuit Breakers, Molded Case, Branch Circuit And Service
3. NECA –National Electrical Contractors Association
    a. 407, Recommended Practice for Installing and Maintaining Panelboards
4. NEMA –National Electrical Manufacturer’s Association
    a. AB 1; Molded Case Circuit Breakers
    b. PB 1; Panelboards
    c. PB 1.1; Instructions for Safe Installation, Operation and Maintenance of Panelboards Rated 600 Volts or Less
5. UL -Underwriters Laboratories, Inc.
    a. 50; Cabinets and Boxes
    b. 67; Panelboards
    c. 98; Enclosed and Dead Front Switches
    d. 489; Molded-Case Circuit Breakers and Circuit Breaker Enclosures
    e. 891; Dead-Front Switchboards
    f. 943; Ground Fault Circuit Interrupters
    g. 977; Fused Power Circuit Devices50; Enclosures for Electrical Equipment

1.3 SUBMITTALS

A. Submit manufacturer's data for materials specified within this Section in accordance to Section 26 05 00.

B. Submittal shall show the following information: circuit breaker numbering, circuit breaker type and short circuit rating, provisions for future circuit breakers, bussing, including neutral and ground, ratings and enclosure dimensions and trims.

1.4 QUALITY ASSURANCE

A. All materials, equipment and parts comprising the materials specified herein shall be new and unused, bearing UL labels where applicable.

1.5 DELIVERY, STORAGE AND HANDLING

A. Handle carefully to avoid damage to internal components, enclosure and finish.

B. Store in a clean, dry environment. Maintain factory packaging and, if required, provide an additional cover to protect enclosure in harsh environments.

PART 2 -PRODUCTS

2.1 MANUFACTURERS

A. Square D, Cutler-Hammer or approved equal.

2.2 MATERIALS

A. Panelboards

1. Interior

a. Shall be factory-assembled with voltage, ampacity, and short circuit rating as shown in Drawings.

b. Provide 1 continuous copper bus bar per phase. Each bus bar shall have sequentially phase branch circuit connectors suitable for plug-on or bolt-on branch circuit breakers. The bussing shall be fully rated. Panelboard bus current rating shall be determined by heat-rise tests conducted in accordance with UL 67. Panelboards shall be suitable for use as Service Equipment when application requirements comply with UL 67 and CEC/NEC 230.F and 230.G.

c. All current-carrying parts shall be insulated from ground and phase-to-phase by high dielectric strength material.

d. Interior trim shall be of dead-front construction to shield user from energized parts. Dead-front trims shall have pre-formed twist-out covering unused mounting spaces.

e. Nameplates shall contain system information and catalog number or factory order number. Interior wiring diagram, neutral wiring diagram, UL Listed label and short circuit current rating shall be displayed on the interior.

f. Main and sub-feed circuit breakers shall be vertical mounted. Interior leveling provisions shall be provided for flush mounted applications.

2. Main Circuit Breaker

a. Circuit breaker shall be of type, rating and poles shown on Drawings per Section 26 28 11 – Overcurrent Protection Devices.

3. Branch Circuit Breakers

a. Circuit breakers shall be of type, rating and poles shown on Drawings per Section 26 28 11 – Overcurrent Protection Devices.

4. Enclosures

a. Type NEMA 1 Boxes

1) Boxes shall be galvanized steel constructed in accordance with UL 50 requirements. Galvanealed steel will not be acceptable.

2) Boxes shall have removable endwalls with knockouts located on one end. Boxes shall have welded interior mounting studs. Interior mounting brackets are not required.

3) Box width shall be 20 in wide.

b. Type NEMA 1 Fronts

1) Front shall meet strength and rigidity requirements per UL 50 standards. Front shall have ANSI 49 gray enamel electrodeposited over cleaned phosphatized steel.

2) Fronts shall be hinged 1-piece with door. Mounting shall be as indicated in Drawings.

3) Panelboards rated 225 amperes and below shall flat fronts with concealed door hinges and trim screws. Front shall not be removable with the door locked. Panelboards rated above 225 amperes shall have fronts with trim clamps and concealed door hinges. Front doors shall have rounded corners and edges shall be free of burrs.

4) Front shall have cylindrical tumbler type lock with catch and spring-loaded stainless steel door pull. All lock assemblies shall be keyed alike. Two (2) keys shall be provided with each lock. A clear plastic directory cardholder shall be mounted on the inside of door.

c. Type NEMA 3R, 5, and 12

1) Enclosures shall be constructed in accordance with UL 50 requirements. Enclosures shall be painted with ANSI 49 gray enamel electrodeposited over cleaned phosphatized steel.

2) All doors shall be gasketed and equipped with a tumbler type vault lock. All lock assemblies shall be keyed alike. 2 keys shall be provided with each lock. A clear plastic directory cardholder shall be mounted on the inside of door.

3) Maximum enclosure dimensions shall not exceed 20 in wide and 6.5 in deep.

PART 3 -EXECUTION

3.1 INSTALLATION

A. Install in accordance with manufacturer's written instructions and NEMA PB 1.1.

B. Installation shall conform to NECA 407 where not specified under this Division.

C. Anchor panelboards to structural members and as shown on Drawings. Provide additional support as required. Anchor freestanding distribution panels to concrete pad.

D. Mount panelboards level and plumb.

E. Install flush mounted panel backbox front edges flush with finished wall. Where flush panel backbox is deeper than wall depth, install closing trim of wood or metal to provide a finished trim.

F. Where panelboard is flush in wall, provide one ¾" conduit stub into accessible ceiling above for every 5 spare circuit breaker or available space.

G. After installation, make all feeder connections to circuit breaker load side lugs and incoming secondary feeders.

3.2 FIELD QUALITY CONTROL

A. Inspect complete installation prior to energizing for physical damage, proper alignment, anchorage and grounding.

B. Check tightness of bolted connections and circuit breaker connections using a calibrated torque wrench or torque screwdriver per manufacturer's written specifications.

3.3 ADJUSTING

A. Measure steady state load line currents at each panelboard feeder; rearrange panelboard circuits to balance the phase loads with 20% of each other. Maintain proper phasing for multi-wire branch circuits.

3.4 SCHEDULES

A. Fill out panelboard circuit identification card, typewritten, with list of circuits in use. Identification shall be specific with room designation and other information as necessary. For distribution panels, use engraved laminated phenolic plates showing load served.

END OF SECTION

CONFORMED

SECTION 26 27 26

WIRING DEVICES

PART 1 – GENERAL

1.1 SUMMARY

A. Section includes

1. Provide all labor, materials and equipment necessary to complete the installation required for the items specified under this Section, including but not limited to wiring devices.

B. Related sections

1. Where items specified in other Division 26 sections conflict with the requirements of this Section, the most stringent requirement shall govern.
    a. 26 05 26 – Grounding and Bonding for Electrical Systems
2. The requirements of this Section apply to all Division 26 work, as applicable.
3. Consult all other sections, determine the extent and character of related work and properly coordinate work specified herein with that specified elsewhere to produce a complete installation.

1.2 REFERENCES

A. Comply with the latest edition of the following applicable specifications and standards except as otherwise shown or specified:

1. Federal Specification
    a. W-C-596; Connector, Electrical, Power, General Specification for
    b. W-S-896; Switches, Toggle (Toggle and Lock), Flush Mounted (General Specification)
2. NEMA –National Electrical Manufacturer's Association
    a. WD 1; General Color Requirements for Wiring Devices
    b. WD 6; Wiring Devices-Dimensional Requirements
3. UL -Underwriters Laboratories, Inc.
    a. 20; General-Use Snap Switches
    b. 498; Standard for Attachment Plugs and Receptacles
    c. 943; Standard for Ground-Fault Circuit-Interrupters
    d. 1449; Standard for Transient Voltage Surge Suppressors

1.3 SUBMITTALS

A. Submit manufacturer's data for materials specified within this Section in accordance to Section 26 05 00.

1.4 QUALITY ASSURANCE

A. All materials, equipment and parts comprising the materials specified herein shall be new and unused, bearing UL labels where applicable.

PART 2 – PRODUCTS

2.1 SWITCHES

A. Wall switches

1. Specification grade, quiet, AC rated, mechanical, snap type with silver alloy contacts, and shall comply with NEMA WD-1 and Fed. Spec W-S-896.
2. Rating shall be 20A at 120/277Vac, unless otherwise shown.

3. Handles shall be nylon; color shall be compatible with adjacent wall finish.
4. Manufacturers and types
   a. Single pole, single throw
      1) Cooper Wiring Devices #CSB120, Hubbell #CSB120, or equal.
   b. Double pole, single throw
      1) Cooper Wiring Devices #CSB220, Hubbell #CSB220, or equal.
   c. Three way
      1) Cooper Wiring Devices #CSB320, Hubbell #CSB320, or equal.

B. Wall dimmer switches

1. Linear slide type dimmer with smooth and continuous square law dimming curve that complies with UL 20 and is UL listed for the specified load.
2. Dimmers shall have power failure memory to bring lights back on at same level prior to power interruption.
3. Dimmers shall incorporate air-gap switch accessible with wall plate installed.
4. Furnish dimmer switch of rating to connected loads; de-rate as required by manufacturer's information for ganged installations.
5. Coverplate shall be snap-on type with no visible attachments or fins. Color shall be compatible with adjacent wall finish.
6. Manufacturer and type
   a. Lutron Nova series or approved equal.

2.2 RECEPTACLES

A. Standards

1. Specification grade, NEMA 5-15R configuration grounding type, rated 15A at 125/250Vac that conform to NEMA WD-6 and Fed. Spec W-C-596.
2. At dedicated receptacle locations and as otherwise noted, use specification grade, NEMA 5-20R configuration grounding type, rated 20A at 125/250Vac that conform to NEMA WD-6 and when possible Fed. Spec W-C-596.
3. Specialty receptacles shall conform to NEMA WD-6 and UL standards as applicable.

B. Color

1. General purpose receptacle face shall be nylon; color shall be compatible with adjacent wall finish, unless otherwise indicated.

C. Receptacle types

1. General purpose single
   a. Provide self-grounding back and side wired with binding head staked terminal screw.
   b. Use Cooper Wiring Devices #5261, Hubbell #5261, or equal for NEMA 5-15R.
   c. Use Cooper Wiring Devices #5361, Hubbell #5361, or equal for NEMA 5-20R.
2. General purpose duplex
   a. Provide self-grounding back and side wired with binding head staked terminal screws and break-off strip for two circuit wiring.
   b. Use Cooper Wiring Devices #5262, Hubbell #5262, or equal for NEMA 5-15R.
   c. Use Cooper Wiring Devices #5362, Hubbell #5362, or equal for NEMA 5-20R.
3. Transient voltage surge suppressor (TVSS) duplex
   a. Provide 20A, 125Vac receptacle consisting of NEMA 5-20R duplex device with integral TVSS protection circuit.

b. Provide LED indicator to verify surge protection and ground, and audible alarm to notify bad ground connection or surge protection expiration.

c. TVSS characteristics:

1) 400V clamping voltage.

2) 280J energy rating.

3) 150Vac RMS MOV rating

4) 18kA maximum surge current in all modes (L-N, L-G and N-G)

d. Use Cooper Wiring Devices #5362_S, no known equal.

4. Isolated ground

a. Provide receptacle specified within this Section with equipment grounding contacts connected only to the green grounding screw terminal of the device and with inherent electrical isolation from mounting strap.

5. Ground fault circuit interrupter (GFCI) duplex

a. Provide 20A, 125Vac receptacle consisting of NEMA 5-20R duplex device with integral solid state sensing and signaling circuitry capable of detecting and interrupting a maximum 5mA line-to-ground fault current in approximately 1/40th of a second per UL 943.

b. Provide visual device with trip indication, manual reset and test mechanisms per UL 943.

c. Device shall be capable of point of use and multi-outlet protection.

d. Use Cooper Wiring Devices #XGF20, Hubbell #GF53, or equal.

6. Hospital grade and tamper resistant

a. Provide receptacle specified within this Section that conforms to UL 498 “Hospital Grade” requirements.

b. Tamper resistance receptacle shall have integral protection mechanism to prevent accidental shock from foreign object contacting energized blades.

7. Special purpose

a. Provide specification grade devices with NEMA configuration, voltage, ampacity, poles and ground provisions as noted on Drawings.

2.3 WALL PLATES

A. Interior locations

1. Finished Areas: 0.032” stainless steel, brushed or satin finish with required number of openings for location.

2. Exposed Areas: galvanized, raised type.

B. Exterior: die-cast copper-free aluminum, gasketed, raintight cover UL listed for exterior and wet locations while in use. Use Hubbell #WP8M (duplex), #WP26M (GFCI) or equal.

C. Screws shall match plate.

D. Tamper resistance receptacles shall have exposed screws of temper resistant type.

E. Individual, gangable wall plates are not acceptable where two or more devices are installed at one location.

PART 3 - EXECUTION

3.1 PREPARATION

A. Coordinate device heights with architectural drawings and details.

B. Locate switches on latch side of door, unless otherwise indicated.

3.2 INSTALLATION

A. Mount and align device and wall plates level and plumb. Insure wall plates fit flat against wall and tight against device without strain on plate.

B. Comply with manufacturer's instructions regarding termination of conductors to wiring device.

C. Derate ganged dimmer switches as instructed by manufacturer and use dedicated neutrals within all dimmer circuits.

D. Provide wall plates for all outlet boxes with devices.

E. Install blank wall plates on all outlet boxes in which no device is present or installed.

END OF SECTION

CONFORMED

SECTION 26 28 11

OVERCURRENT PROTECTION DEVICES

PART 1 - GENERAL

1.1 SUMMARY

A. Section includes

1. Provide all labor, materials and equipment necessary to complete the installation required for the items specified under this Section, including but not limited to overcurrent protection devices.

B. Related sections

1. Where items specified in other Division 26 sections conflict with the requirements of this Section, the most stringent requirement shall govern.
2. The requirements of this Section apply to all Division 26 work, as applicable.
3. Consult all other sections, determine the extent and character of related work and properly coordinate work specified herein with that specified elsewhere to produce a complete installation.

1.2 REFERENCES

A. Comply with the latest edition of the following applicable specifications and standards except as otherwise shown or specified:

1. CCR –California Code of Regulations, Title 24
   a. Part 3 -California Electrical Code(CEC); NFPA 70 National Electrical Code (NEC) with California amendments
2. Federal Specification
   a. W-C-375; Circuit Breakers, Molded Case, Branch Circuit And Service
3. NEMA –National Electrical Manufacturer’s Association
   a. AB 1; Molded-Case Circuit Breakers, Molded Case Switches, and Circuit-Breaker Enclosures
   b. PB 2.2; Application Guide for Ground Fault Protective Devices for Equipment
4. UL -Underwriters Laboratories, Inc.
   a. 248; Low Voltage Fuses
   b. 468; Wire Connectors
   c. 508E; IEC Type "2" Coordination Short Circuit Tests
   d. 489; Molded-Case Circuit Breakers and Circuit Breaker Enclosures
   e. 943; Standard for Ground-Fault Circuit-Interrupters

1.3 SUBMITTALS

A. Submit manufacturer’s data for materials specified within this Section in accordance to Section 26 05 00.

B. Production test of circuit breakers upon request of Engineer.

C. Submittal shall show the following information: circuit breaker numbering, circuit breaker type and short circuit rating, provisions for future circuit breakers, bussing, including neutral and ground, ratings and enclosure dimensions and trims.

1.4 QUALITY ASSURANCE

A. All materials, equipment and parts comprising the materials specified herein shall be new and unused, bearing UL labels where applicable.

B. The manufacturing facility shall be registered by Underwriters Laboratories Inc. to the International Organization for Standardization ISO 9002 Series Standards for quality.

1.5 DELIVERY, STORAGE AND HANDLING

A. Handle carefully to avoid damage to internal components, enclosure and finish.

B. Store in a clean, dry environment. Maintain factory packaging and, if required, provide an additional cover to protect enclosure in harsh environments.

PART 2 -PRODUCTS

2.1 FUSES

A. All power distribution fuses shall be time-delay, high interrupting (200kAIC minimum) and current limiting type, unless otherwise indicated. All fuses shall be of same manufacturer and model.

1. Motor branch circuit fuses (0 – 600A): UL Class RK5 dual element, time delay type shall be size for UL 508E “Type 2” coordination for the motor controller. Coordinate fuse selection with motor starter overload relay heaters as required.

2. General purpose feeder fuses (0 – 600A): UL Class RK1 dual element, time delay type shall be size per Drawings.

B. Control and instrumentation fuses shall of type and rating as recommended by equipment manufacturer, suitable for fuse blocks or holders installation.

2.2 MOLDED CASE CIRCUIT BREAKERS

A. General

1. Circuit breakers shall be constructed using glass reinforced insulating material. Current carrying components shall be completely isolated from the handle and the accessory mounting area.

2. Circuit breakers shall have an over center, trip free, toggle operating mechanism which will provide quick-make, quick-break contact action. The circuit breaker shall have common tripping of all poles.

3. The circuit breaker handle shall reside in a tripped position between ON and OFF to provide local trip indication.

4. The maximum ampere rating and UL, IEC, or other certification standards with applicable voltage systems and corresponding interrupting ratings shall be clearly marked on face of circuit breaker after installation.

5. Circuit breakers shall have an RMS interrupting capacity not less than shown on Drawings, or if not shown shall not be less than:

a. 25kA for 480V systems

b. 22kA for 240V (or less) systems

6. Each circuit breaker shall be equipped with a push-to-trip button, located on the face of the circuit breaker to mechanically operate the circuit breaker tripping mechanism for maintenance and testing purposes.

7. Circuit breakers shall be equipped with UL Listed electrical accessories as noted on Drawing. Circuit breaker handle accessories shall provide provisions for locking handle in the ON and OFF position.

8. All circuit breakers shall be UL Listed for reverse connection without restrictive line and load markings and be suitable for mounting in any position.

9. Circuit breakers shall be constructed with factory installed mechanical lugs. All circuit breakers shall be UL Listed to accept field installable/removable mechanical type lugs. Lug body shall be

bolted in place; snap in design not acceptable. All lugs shall be UL Listed to accept solid (not larger than #8 AWG) and/or stranded copper and aluminum conductors. Lugs shall be suitable for 90°C rated wire, sized according to the 75°C temperature rating in the CEC.

10. All circuit breakers shall be capable of accepting bus connections.

B. Thermal-Magnetic Circuit Breakers

1. Circuit breakers shall have a permanent trip unit containing individual thermal and magnetic trip elements in each pole.
2. Thermal trip elements shall be factory preset and sealed. Circuit breakers shall be true RMS sensing and thermally responsive to protect circuit conductor(s) in a 40°C ambient temperature.
3. Circuit breaker frame sizes above 100 amperes shall have a single magnetic trip adjustment located on the front of the circuit breaker.
4. Provide equipment ground fault protection where shown on Drawing with the following features.
   a. Ground fault sensing system shall be modified zero sequence sensing type and not require any external power to trip the circuit breaker.
   b. The ground fault sensing system shall be suitable for use on grounded systems. The ground fault sensing system shall be suitable for use on three-phase, three-wire circuits where the system neutral is grounded but not carried through the system or on three-phase, four-wire systems.
   c. Ground fault pickup current setting and time delay shall be field adjustable. A switch shall be provided for setting ground fault pickup point. A means to seal the pickup and delay adjustments shall be provided.
   d. The ground fault sensing system shall include a ground fault memory circuit to sum the time increments of intermittent arcing ground faults above the pickup point.
   e. A means of testing the ground fault system to meet the on-site testing requirements of CEC/NEC 230-95(c) shall be provided.
   f. Local visual ground fault trip indication shall be provided.
   g. The ground fault sensing system shall be provided with Zone Selective Interlocking (ZSI) communication capabilities compatible with other thermal magnetic circuit breakers equipped with ground fault sensing, electronic trip circuit breakers with integral ground fault sensing and external ground fault sensing systems as noted on Drawings.

C. Electronic Trip Circuit Breakers

1. Circuit breaker trip system shall be a microprocessor-based true RMS sensing design with sensing accuracy through the thirteenth (13th) harmonic. Sensor ampere ratings shall be as indicated on Drawings.
2. The integral trip system shall be independent of any external power source and shall contain no less than industrial grade electronic components.
3. The ampere rating of the circuit breaker shall be determined by the combination of an interchangeable rating plug, the sensor size and the long-time pickup adjustment on the circuit breaker. The sensor size, rating plug and adjustment positions shall be clearly marked on the face of the circuit breaker. Circuit breakers shall be UL Listed to carry 80% (or 100% where noted on Drawings) of their ampere rating continuously.
4. The following time/current response adjustments shall be provided. Each adjustment shall have discrete settings and shall be independent of all other adjustments.
   a. Instantaneous Pickup
   b. Long Time Pickup
   c. Long Time Delay
   d. Short Time Pickup
   e. Short Time Delay

f. Ground Fault Pickup (when specified with ground fault protection)

g. Ground Fault Delay (when specified with ground fault protection)

5. A means to seal the trip unit adjustments in accordance with CEC/NEC 240-6(b) shall be provided.

6. Local visual trip indication for overload, short circuit and ground fault trip occurrences shall be provided.

7. An ammeter to individually display all phase currents flowing through the circuit breaker shall be provided. All current values shall be displayed in true RMS with 2% accuracy.

8. Long Time Pickup indication to signal when loading approaches or exceeds the adjusted ampere rating of the circuit breaker shall be provided.

9. The trip system shall include a Long Time memory circuit to sum the time increments of intermittent overcurrent conditions above the pickup point. Means shall be provided to reset Long Time memory circuit during primary injection testing.

10. An ammeter to individually display all phase currents flowing through the circuit breaker shall be provided. Indication of inherent ground fault current flowing in the system shall be provided on circuit breakers with integral ground fault protection. All current values shall be displayed in true RMS with 2% accuracy.

11. Circuit breakers shall be equipped with back-up thermal and magnetic trip system.

12. Equipment Ground Fault Protection shall be provided where noted on Drawings.

a. Circuit breakers shall be provided with integral equipment ground fault protection for grounded systems. The circuit breaker shall be suitable for use on three-phase, three-wire circuits where the system neutral is grounded but not carried through the system or on three-phase, four-wire systems.

b. A separate neutral current transformer shall be provided for three-phase, four-wire systems.

c. Ground fault sensing system shall be residual sensing type.

d. The trip system shall include a ground fault memory circuit to sum the time increments of intermittent ground faults above the pickup point.

e. A means of testing the ground fault system to meet the on-site testing requirements of CEC/NEC 230-95(c) shall be provided.

f. Local visual trip indication for a ground fault trip occurrence shall be provided.

g. The ground fault sensing system shall be provided with Zone Selective Interlocking (ZSI) communication capabilities compatible with other thermal magnetic circuit breakers equipped with ground fault sensing, electronic trip circuit breakers with integral ground fault sensing and external ground fault sensing systems as noted on Drawings.

13. Circuit breaker trip system shall be equipped with an externally accessible test port. Disassembly of the circuit breaker shall not be required for testing. Test set shall be capable of verifying the operation of all trip functions with or without tripping the circuit breaker.

2.3 INSULATED CASE CIRCUIT BREAKERS

A. Circuit breaker trip system shall be a microprocessor-based true RMS sensing design with sensing accuracy through the thirteenth (13th) harmonic. Sensor ampere ratings shall be as indicated on Drawings.

B. The integral trip system shall be independent of any external power source and shall contain no less than industrial grade electronic components.

C. Circuit breakers shall be equipped with back-up thermal and magnetic trip system.

D. Circuit breakers shall have an RMS interrupting capacity not less than shown on Drawings, or if not shown shall not be less than:

1. 100kA for all frame sizes at 208V

2. 65kA for all 800A - 2,000A frames at 480V
3. 100kA for all 3,000A - 4,000A frames at 480V

E. The ampere rating of the circuit breaker shall be determined by the combination of an interchangeable rating plug, the sensor size and the long-time pickup adjustment on the circuit breaker. The sensor size, rating plug and switch adjustments shall be clearly marked on the face of the circuit breaker. Circuit breakers shall be UL Listed to carry 100% of their ampere rating continuously.

F. The following time/current response adjustments shall be provided. Each adjustment shall have discrete settings and shall be independent from all other adjustments.

a. Instantaneous Pickup
b. Long Time Pickup
c. Long Time Delay
d. Short Time Pickup
e. Short Time Delay
f. Ground Fault Pickup (when specified with ground fault protection)
g. Ground Fault Delay (when specified with ground fault protection)

G. Circuit breakers with adjustable short-time function shall be provided with defeatable instantaneous adjustment and 30 cycle short-time withstand ratings. Short-time withstand ratings shall be specified in RMS symmetrical amperes, as shown on the [drawings] [schedules].

H. A means to seal the rating plug and trip unit adjustments in accordance with CEC/NEC 240-6(b) shall be provided.

I. Local visual trip indication for overload, short circuit and ground fault trip occurrences shall be provided.

J. An ammeter to individually display all phase currents flowing through the circuit breaker shall be provided. [Indication of inherent ground fault current flowing in the system shall be provided on circuit breakers with integral ground fault protection]. All current values shall be displayed in True RMS with 2% accuracy.

K. Long Time Pickup indication to signal when loading approaches or exceeds the adjusted ampere rating of the circuit breaker shall be provided.

L. The trip system shall include a Long Time memory circuit to protect against intermittent overcurrent conditions above the long time pickup point. Means shall be provided to reset Long Time memory circuit during primary injection testing.

M. True two-step stored energy mechanism with five (5) cycle closing time shall be provided. All circuit breakers shall have multiple CHARGE/CLOSE provisions allowing the following sequence: CHARGE, CLOSE, RECHARGE, OPEN/CLOSE/OPEN

N. Local control pushbuttons to OPEN and CLOSE circuit breaker shall be provided. Color coded visual indication of contact position (OPEN or CLOSED) shall be provided on the face of the circuit breaker. Local manual charging following CLOSE operation shall be provided. Color coded visual indication of mechanism CHARGED and DISCHARGED position shall be provided on the face of the circuit breaker. Visual indicator shall indicate CHARGED only when closing springs are completely charged.

O. Each circuit breaker shall be electrically operated to permit remote CHARGE, CLOSE, and OPEN capabilities. Electrically operated circuit breaker shall be equipped with charge contact switch for remote indication of mechanism charge status.

P. An ammeter to individually display all phase currents flowing through the circuit breaker shall be provided. [Indication of inherent ground fault current flowing in the system shall be provided on circuit breakers with integral ground fault protection]. All current values shall be displayed in True RMS with 2% accuracy.

Q. All circuit breakers shall be equipped with electrical accessories as noted on Drawings.

R. Provide the following interlocking capabilities:

1. cell door interlock
2. key interlock for main-tie-main
3. lock off

S. Circuit breaker trip system shall be equipped with an externally accessible test port. Disassembly of the circuit breaker shall not be required for testing. Test set shall be capable of verifying the operation of all trip functions with or without tripping the circuit breaker.

T. Equipment Ground Fault Protection shall be provided where noted on Drawings.

1. Circuit breakers shall be provided with integral equipment ground fault protection for grounded systems. The circuit breaker shall be suitable for use on three-phase, three-wire circuits where the system neutral is grounded but not carried through the system or on three-phase, four-wire systems.
2. A separate neutral current transformer shall be provided for three-phase, four-wire systems.
3. Ground fault sensing system shall be residual sensing type.
4. The trip system shall include a ground fault memory circuit to sum the time increments of intermittent ground faults above the pickup point.
5. A means of testing the ground fault system to meet the on-site testing requirements of CEC/NEC 230-95(c) shall be provided.
6. Local visual trip indication for a ground fault trip occurrence shall be provided.
7. The ground fault sensing system shall be provided with Zone Selective Interlocking (ZSI) communication capabilities compatible with other thermal magnetic circuit breakers equipped with ground fault sensing, electronic trip circuit breakers with integral ground fault sensing and external ground fault sensing systems as noted on Drawings.

2.4 DRAWOUT INSULATED CASE CIRCUIT BREAKERS

A. Main circuit breaker shall meet the same requirements of insulated case circuit breakers and be individually drawout mounted where shown on Drawings.

B. Sturdy drawout rails shall be permanently attached to the sides of the breaker compartment and retract into the compartment when not in use.

C. When fully withdrawn, the circuit breaker shall permit access for inspection and testing. Circuit breaker(s) shall also be removable from the rails completely.

D. When the circuit breaker is in the Connected, Test, or Disconnected positions, or when the circuit breaker is removed from the compartment, the compartment door shall be able to be fully closed and secured.

E. A removable crank shall be supplied for racking the circuit breaker between the Connected, Test, or Disconnected positions.

PART 3 -EXECUTION

3.1 PREPARATION

A. Notify Engineer no later than 10 working days for adjustable circuit breaker settings not shown within Drawings. Submit to Engineer the following information:

1. Panel, switchboard name/ID
2. Circuit breaker identifier (i.e., main circuit breaker, load served, etc.)
3. List of necessary settings (i.e., trip settings, time delays, etc.)

3.2 INSTALLATION

A. Install equipment and their accessories in to manufacturer’s instructions, pertinent Codes, and with recognized industry practices to insure device operates properly.

B. Tighten electrical connectors and terminals in accordance to manufacturer's requirements. Where the manufacturer does not have published torque tightening values, comply with the requirements of UL 468.

3.3 FIELD QUALITY CONTROL

A. Check tightness of circuit breaker connections using a calibrated torque wrench or torque screwdriver per manufacturer's written specifications.

B. Obtain the services of an independent testing company who shall provide quality control and adjustments as well as tests for

1. Check each circuit breaker above 100A on a 225A frame for long-time and short-time delay pickup and instantaneous pickup.

   a. Instantaneous pickup current shall be determined by 4 cycles or less.

   b. Perform timing test with 300% of breaker trip unit rated current.

   c. Adjust unit if required, so that the tripping characteristics are within the limits of the published time-current characteristic curves for that particular trip unit.

2. Test and calibrate ground fault protection trip and pickup time on 225A frame breakers and larger.

C. Physically test key interlock systems to check for proper functionality.

D. Check and set where required all protective device settings in accordance with approved coordination study settings and conduct ground fault acceptance tests.

3.4 ADJUSTING

A. Adjust all operating mechanisms for free mechanical movement per manufacturer's specifications.

B. Adjust circuit breaker trip and time delay settings to values indicated as instructed by Engineer.

1. Check each circuit breaker above 100A, long-time and short-time delay pickup and instantaneous pickup. Instantaneous pickup current shall be determined by 4 cycles or less. Perform timing test with 300% of breaker trip unit rated current. Adjust unit if required, so that the tripping characteristics are within the limits of the published time-current characteristic curves for that particular trip unit.

2. Main circuit breaker ground fault setting shall be per CEC/NEC 230-95(a) or as directed by Engineer.

3.5 PROTECTION

A. When directed by Engineer provide physical means to "permanently fix" settings for rotary and DIP type switches with a thin coat of clear lacquer.

3.6 CLEANING

A. Remove marks, dirt and debris from installed equipment surfaces for "new like" appearance.

END OF SECTION

CONFORMED

SECTION 26 28 16

SAFETY SWITCHES AND INDIVIDUAL MOUNTED CIRCUIT BREAKERS

PART 1 - GENERAL

1.1 SUMMARY

A. Section includes

1. Provide all labor, materials and equipment necessary to complete the installation required for the items specified under this Section, including but not limited to heavy duty fusible, non-fusible and double throw safety switches.

B. Related sections

1. Where items specified in other Division 26 sections conflict with the requirements of this Section, the most stringent requirement shall govern.
    a. 26 05 26 – Grounding and Bonding for Electrical Systems
    b. 26 28 11 – Overcurrent Protection Devices
2. The requirements of this Section apply to all Division 26 work, as applicable.
3. Consult all other sections, determine the extent and character of related work and properly coordinate work specified herein with that specified elsewhere to produce a complete installation.

1.2 REFERENCES

A. Comply with the latest edition of the following applicable specifications and standards except as otherwise shown or specified:

1. CCR –California Code of Regulations, Title 24
    a. Part 3 -California Electrical Code(CEC); NFPA 70 National Electrical Code (NEC) with California amendments
2. NEMA –National Electrical Manufacturer’s Association
    a. KS 1; Enclosed Switches
    b. 250; Enclosures for Electrical Equipment
3. UL -Underwriters Laboratories, Inc.
    a. 98; Enclosed and Dead Front Switches
    b. 489; Molded-Case Circuit Breakers and Circuit Breaker Enclosures

1.3 SUBMITTALS

A. Submit manufacturer’s data for materials specified within this Section in accordance to Section 26 05 00.

1.4 QUALITY ASSURANCE

A. All materials, equipment and parts comprising the materials specified herein shall be new and unused, bearing UL labels where applicable.

1.5 DELIVERY, STORAGE AND HANDLING

A. Handle carefully to avoid damage to internal components, enclosure and finish.

B. Store in a clean, dry environment. Maintain factory packaging and, if required, provide an additional cover to protect enclosure in harsh environments.

PART 2 -PRODUCTS

2.1 MANUFACTURERS

A. Square D, Cutler Hammer or approved equal.

2.2 MATERIALS

A. Heavy-duty safety switches

1. Switch interior

a. All switches shall have switch blades which are visible when the switch is OFF and the cover is open.

b. Lugs shall be front removable and UL Listed for 75°C conductors, aluminum or copper.

c. 30A through 100A switches shall be equipped with factory or field installed fuse pullers.

d. Switches required for Type 12, 12K or Type 4-4X-5 stainless steel applications shall have all copper current carrying parts.

e. All current carrying parts shall be plated to resist corrosion.

f. Switches shall have removable arc suppressors to facilitate easy access to line side lugs.

g. Switches shall have provisions for a field installable electrical interlock.

2. Switch mechanism

a. Switch operating mechanism shall be quick-make, quick-break such that, during normal operation of the switch, the operation of the contacts shall not be capable of being restrained by the operating handle after the closing or opening action of the contacts has started.

b. The operating handle shall be an integral part of the box, not the cover.

c. Provisions for padlocking the switch in the OFF position with at least three padlocks shall be provided.

d. The handle position shall travel at least 90° between OFF and ON positions to clearly distinguish and indicate handle.

e. All switches shall have a dual cover interlock mechanism to prevent unintentional opening of the switch cover when the switch is ON and prevent turning the switch ON when the cover is open. The cover interlock mechanism shall have an externally operated override but the override shall not permanently disable the interlock mechanism. The tool used to override the cover interlock mechanism shall not be required to enter the enclosure in order to override the interlock.

3. Switch enclosures

a. All enclosures shall be NEMA 1 general purpose unless otherwise noted.

b. Switch covers shall be attached:

1) with welded pin-type hinges (Type 1, 12, 12K, 4-4X-5 stainless steel).

2) top hinged, attached with removable screws and securable in the open position (Type 3R).

3) by molded hinges and type 316 stainless steel hinge pins (Type 4X polyester).

4) by type 316 stainless steel bolts (Type 7/9).

c. The enclosure shall be finished with:

1) gray baked enamel paint which is electrodeposited on cleaned, phosphate pre-treated steel (Type 1).

2) gray baked enamel paint which is electrodeposited on cleaned, phosphate pre-treated galvannealed steel (Type 3R, 12, 12K).

3) a brush finish on type 304 stainless steel (Type 4-4X-5 stainless steel).

4) Gray baked enamel on copper free cast aluminum alloy (Type 7/9).

d. The enclosure shall have ON and OFF markings:

1) stamped into the cover (Type 1, 3R, 4-4X-5 stainless steel, 12, 12K).

2) cast into the cover (Type 7/9).

3) inked on a adhesive label (Type 4X polyester).

e. The operating handle shall be provided with a dual colored, red/black position indication.

f. All switches shall have provisions to accept up to three 3/8" hasp padlocks to lock the operating handle in the OFF position.

4. Switch ratings

a. Switches shall be horsepower rated for ac and/or dc as indicated on Drawings.

b. The UL Listed short circuit current rating of the switches shall be:

1) 10,000 rms symmetrical amperes when used with or protected by Class H or K fuses (30-600A).

2) 200,000 rms symmetrical amperes when used with or protected by Class R or Class J fuses (30-600A switches employing appropriate fuse rejection schemes).

3) 200,000 rms symmetrical amperes when used with or protected by Class L fuses (800-1200A)

B. Double throw switches

1. Shall have the same characteristics as heavy-duty safety switches above for switch interior, mechanism, enclosure and rating.

2. Additional switch operating mechanism characteristics shall be:

a. quick-make, quick-break for 60A through 200A, 2 pole and 3 pole devices.

b. Slow-make, slow-break for

1) 30A and greater than 200A, 2 pole and 3 pole devices.

2) 60A through 200A, 4 pole devices.

C. Individual Mounted Circuit Breakers

1. Circuit Breaker

a. Circuit breakers shall be of type, rating and poles shown on Drawings per Section 26 28 11 – Overcurrent Protection Devices.

2. Enclosure

a. Enclosure shall be galvanized steel constructed in accordance with UL 50 requirements, and be NEMA 1, unless specifically shown or specified otherwise.

PART 3 -EXECUTION

3.1 INSTALLATION

A. The equipment shall be installed per the manufacturer's recommendations.

B. Anchor safety switches to structural members and as shown on Drawings. Provide additional support as required.

C. Mount safety switches level and plumb.

CONFORMED

3.2 FIELD QUALITY CONTROL

A. Inspect complete installation prior to energizing for physical damage, proper alignment, anchorage and grounding.

B. Check tightness of bolted connections per manufacturer's written specifications.

END OF SECTION

CONFORMED

SECTION 26 50 00

LIGHTING

PART 1 - GENERAL

1.1 SUMMARY

A. Section includes

1. Provide all labor, materials and equipment necessary to complete the installation required for the items specified under this Section, including but not limited to fixtures, lamps, standards, bases, hangers, supports, reflectors, glassware, lenses, auxiliary equipment, ballasts and sockets.

B. Related work under this section

1. Where items specified in other Division 26 sections conflict with the requirements of this Section, the most stringent requirement shall govern.
2. The requirements of this Section apply to all Division 26 work, as applicable.
3. Consult all other sections, determine the extent and character of related work and properly coordinate work specified herein with that specified elsewhere to produce a complete installation.

1.2 REFERENCES

A. Comply with the latest edition of the following applicable specifications and standards except as otherwise shown or specified:

1. ANSI -American National Standards Institute
   a. C78; American National Standard for Electric Lamps
   b. C81; American National Standard for Electric Lampholders
   c. C82; American National Standard for Lamp Ballasts
   d. C136; American National Standard for Roadway and Area Lighting Equipment
2. California Codes of Regulations
   a. Part 3 -California Electrical Code(CEC); NFPA 70 National Electrical Code (NEC) with California amendments
   b. Part 6 -California Energy Code
3. IESNA –Illuminating Engineering Society of North America
   a. RP-16; Nomenclature and Definitions for Illuminating Engineering
4. NECA –National Electrical Contractors Association
   a. NECA/IESNA 500, Recommended Practice for Installing Indoor Commercial Lighting Systems
   b. NECA/IESNA 501, Recommended Practice for Installing Exterior Lighting Systems
   c. NECA/IESNA 502, Recommended Practice for Installing Industrial Lighting Systems
5. UL -Underwriter’s Laboratories, Inc.
   a. 935; Standard for Fluorescent-Lamp Ballasts
   b. 1029; Standard for High-Intensity-Discharge Lamp Ballasts
   c. 1574; Standard for Track Lighting Systems

1.3 SUBMITTALS

A. Submit manufacturer's data for materials specified within this Section in accordance to Section 26 05 00.

B. Substituted fixtures shall be submitted with manufacturer's specification sheet and published photometric reports, verified by testing to IES and NEMA standards under controlled laboratory conditions.

1.4 QUALITY ASSURANCE

A. All materials, equipment and parts comprising the materials specified herein shall be new and unused, bearing UL labels where applicable.

B. Installation shall conform to the following standards:

1. NECA/IESNA 500, Recommended Practice for Installing Indoor Commercial Lighting Systems
2. NECA/IESNA 501, Recommended Practice for Installing Exterior Lighting Systems
3. NECA/IESNA 502, Recommended Practice for Installing Industrial Lighting Systems

1.5 DELIVERY, STORAGE AND HANDLING

A. Handle carefully to avoid damage to internal components, enclosure and finish.

B. Store in a clean, dry environment. Maintain factory packaging and, if required, provide an additional cover to protect enclosure in harsh environments.

1.6 WARRANTY

A. Furnish one-year guarantee in accordance with and in form required under Section 26 05 00.

PART 2 -PRODUCTS

2.1 GENERAL

A. Fixtures shall be of the types, wattages and voltages shown on Drawings.

B. Fixtures shall be UL listed as an entire assembly and for the installed location.

C. Fixtures' mounting trim shall be compatible with ceiling material, coordinate with Architect Drawings for each location. Fixtures delivered which are not compatible shall be returned and replaced at Contractor's expense.

D. Luminaire recessed in fire rated ceiling shall conform to UL Standards, equipped with yoke where in tee ceiling and field fabricated fire protection box in accordance with latest UL Fire Resistance Directory.

E. Fluorescent luminaire lenses shall be Pattern 12 of 100% virgin acrylic with 0.125" thickness except shown or specified otherwise.

F. Equip exposed fluorescent lamps with safety lamp holders or wire guard.

G. Deliver fixtures and other lighting equipment complete with suspension accessories, canopies, castings, sockets, holders, reflectors, ballasts, diffusing material, louvers, frames, and recessing boxes all wired and assembled.

H. Hangers: Swivel-type to allow for free movement of 45 degrees from vertical at canopy and at luminaire housing. Steel tube hangers shall include a 1/16-inch diameter galvanized wire cord or equivalent (100-pound break strength) in stem assembly attached to luminaire housing and building structure. Attach loop with C-type tool applied compression splice.

I. All metal halide lamp luminaires shall be the enclosed type with diffuser or lens to withstand an arc tube rupture.

J. Louvers for fluorescent luminaires which are removable for re-lamping but not hinged shall be securely fastened near each end between the fixture housing and louvers using No. 16 jack chain.

CONFORMED

2.2 BALLASTS

A. Ballast(s) in luminaire recessed in fire rated ceiling shall be approved for such use.

B. Ballast installed indoors shall be of encapsulated type for noise control.

C. Use appropriate rated ballast in high or low temperature applications.

D. Compact fluorescent and fluorescent lamp ballasts

1. Ballasts shall be programmed rapid start.
2. Ballasts shall be UL 935 listed, Class P, Type 1 Outdoor, CSA Certified where applicable.
3. The ballast shall meet or exceed ANSI C82.11, where applicable.
4. The ballast shall withstand transients specified within ANSI C62.41 Cat. A.
5. THD (Total Harmonic Distortion) shall be less than 10%.
6. Ballast power factor shall be greater than 98%.
7. The ballast shall have an audible noise rating of Class A or better.

E. High intensity discharge (HID) lamp ballasts

1. Ballasts shall be premium constant wattage (regulator stabilized) type, designed in accordance with all applicable ANSI specifications including ANSI C82.4 and UL 1029.
2. Power factor shall be greater than 90%.
3. Provide protective fusing with HID ballasts or HID fixtures.

F. Lamps

1. Provide lamps in all lighting fixtures shown.
2. Type as noted on the plans, T8 unless noted otherwise.
3. Approved manufacturers are General Electric, Osram Sylvania or equal.

PART 3 -EXECUTION

3.1 EXAMINATION

A. Locate all lighting fixtures by reference to Drawings, both electrical and architectural.

B. Report proposed changes for luminaire locations found necessary due to interference with structure, pipes, ducts, and other items to Owner's representative for direction before installation. Luminaires specified with overall lengths are subject to change. Adjust as directed by Owner's representative.

C. Contractor shall be responsible to coordinate with ceiling installation trade. This will assure that proper fixture type will be furnished to match ceiling system specified.

3.2 INSTALLATION

A. Luminaires shall be properly grounded per CEC Article 410, Parts 17 through 21.

B. Luminaires recessed in fire rated ceilings shall be in accordance with UL Fire Resistance Directory.

C. Install all luminaires true and plumb. Support and mount in accordance manufacturer's instructions and with CEC Article 410, Parts 16 and 76.

D. Install recessed luminaires with separate junction box, flexible conduit, and heat-resisting wire as required by CEC. Set junction box in furred space facing luminaire for maximum accessibility. Furnish and install metal ceiling frame so luminaire can be removed without damaging finish.

E. Suspended ceiling mounting

1. Attach all light fixtures to ceiling grid runners to resist a horizontal force equal to the weight of the fixtures. Use a #10 Tek-screw or approved fastener.

2. Flush or recessed light fixtures weighing less than 56lbs. May be supported directly on runners of a heavy duty grid system, but in addition, they must have a minimum of (2) 12ga slack safety wires attached to the fixtures at diagonal corners and anchored to the structure above in the same fashion as the grid system. All 4'x4' light fixtures must have slack safety wires at each corner.
3. All flush or recessed light fixtures 56lbs. Or greater must be independently supported by not less than (4) taut 12ga wires each attached to the fixture and the structure above regardless of the grid system used. The 4 taut 12ga wires including their attachment to the structure above must be capable of supporting 4 times the fixture weight.
4. All light fixtures supported on intermediate grid system must be independently supported by not less than (4) taut 12ga wires each attached to the fixture and the structure above.
5. Support surface mounted light fixtures by at least 2 positive devices which surround the ceiling runner and which are each supported from the structure above by a 12ga wire. Spring clips or clamps that connect only to the runner are not acceptable. Provide additional supports for 8' or longer fixtures.
6. Support pendant mounted light fixtures directly from the structure above with hanger wires of cables passing through each pendant hanger & capable of supporting 4 times the fixture weight.

3.3 ADJUSTING

A. Particular care shall be used to eliminate light leaks around edge of recessed fixture trims.

3.4 CLEANING

A. Clean all glass and plastic and polish all visible metal parts before submitting job to Owner's representative for final acceptance. Remove all fingerprints and dirt from exposed surfaces. Replace scratched or damaged components.

END OF SECTION

CONFORMED

SECTION 27 05 26

GROUNDING AND BONDING FOR COMMUNICATIONS

PART 1 - GENERAL

1.1 SUMMARY

A. Section includes

a. Provide all labor, materials and equipment necessary to complete the installation required for the item specified under this Section, including but not limited to telecommunication system grounding.

B. Related sections

1. Where items specified in other Division 27 sections conflict with the requirements of this Section, the most stringent requirement shall govern.
2. The requirements of this Section apply to all Division 27 work, as applicable.
3. Consult all other sections, determine the extent and character of related work and properly coordinate work specified herein with that specified elsewhere to produce a complete installation.

1.2 REFERENCES

A. Comply with the latest edition of the following applicable specifications and standards except as otherwise shown or specified:

1. CCR –California Code of Regulations, Title 24
   a. Part 3 -California Electrical Code(CEC); NFPA 70 National Electrical Code (NEC) with California amendments
2. IEEE –Institute of Electrical and Electronic Engineers
   a. 1100; Recommended Practices Powering and Grounding Electronic Equipment
3. NFPA –National Fire Protection Association
   a. 780; Lightning Protection Code
4. TIA/EIA – Telecommunications Industry Association/Electronic Industries Alliance
   a. 607; Commercial Building Grounding and Bonding Requirements for Telecommunications
5. UL -Underwriters Laboratories, Inc.
   a. 467; Grounding and Bonding Equipment

1.3 SYSTEM DESCRIPTION

A. This Section provides for the grounding and bonding of all electrical and communication apparatus, appliances, components, fittings and accessories where required to provide a permanent, continuous, low impedance, grounded electrical system.

B. Except as otherwise indicated, the complete electrical installation including equipment and metallic raceways, boxes and cabinets shall be completely and effectively grounded in accordance with all Code requirements, whether or not such connections are specifically shown or specified.

C. Provide telecommunication system ground bus bars with each building main telecommunications equipment room or cabinet/rack location. Provide connection between the bus bar and main building reference ground bus, the ground bus of the panelboard serving power to telecommunication equipment, and all telecommunication conduit, cable trays, cable ladders and boxes.

1.4 SUBMITTALS

A. Submit manufacturer's data for equipment and materials specified within this Section in accordance to Section 26 05 00.

1.5 QUALITY ASSURANCE

A. All materials, equipment and parts comprising the materials specified herein shall be new and unused, bearing UL labels where applicable.

PART 2 -PRODUCTS

2.1 INSULATED GROUNDING BUSHINGS

A. Plated malleable iron body with 150°C molded plastic insulated throat and lay-in ground lug; OZ/Gedney BLG, Thomas & Betts #TIGB series or equal.

2.2 CONNECTIONS TO STRUCTURAL STEEL, GROUND RODS OR SPICES

A. Where required by the Drawings, grounding conductors shall be spliced together, connected to ground rods or connected to structural steel using exothermic welds, Cadweld or equal, or high pressure compression type connectors, Cadweld, Thomas & Betts or equal.

2.3 BONDING JUMPERS

A. OZ/Gedney Type BJ, Thomas & Betts #3840 series or equal.

2.4 GROUND CONDUCTOR

A. Ground conductor shall be #6 AWG UL labeled, Type THWN insulated copper wire, green in color.

2.5 TELECOMMUNICATION MAIN GROUNDING BUS BAR (TMGB)

A. Provide grounding bus bar at telecommunication backboards, racks and cabinets of the following type:

1. Backboards 4'X8' and greater, floor mounted telecommunication equipment racks/cabinets larger than 60" height or wall mounted cabinets greater than 36"Wx36"H

   a. Provide 1 13.5"x2"x1/4" TK copper bus bar mounted on wall with insulating stand-offs at +96" AFF. Furnish complete with cast copper alloy body Thomas Betts Series 310 or equal lugs for connecting grounding conductors. Attach lugs to bus with appropriate size bronze bolt, flat washer and Belleville washer. All connections shall be torque, and all holes shall be drilled and tapped for single hole lugs. Provide 4 spare lugs with respective spaces.

2. Backboards less than 4'X8', floor/wall mounted telecommunication equipment racks/cabinet less than 60" or wall mounted cabinets less than 36"Wx36"H

   a. Provide an aluminum loadcenter ground kit with 14 terminals minimum, General Electric TGL2 or equal. A minimum of 3 terminals shall accommodate #6 AWG. Mount within enclosure or on backboard at +96" AFF.

PART 3 -EXECUTION

3.1 INSTALLATION

A. Telecommunication system grounding

1. Bond all telecommunication conduit, cable tray, ladder rack, equipment racks and all other metallic telecommunication infrastructure components to the nearest TMGB using a #6 AWG conductor.

2. Provide #6 AWG ground within ¾" conduit from each secondary backboard, cabinet, rack, etc. to the BGB.

3. Install #6 AWG grounding conductor in nonmetallic underground raceways containing only fiber optic cable.

4. Provide an engraved nameplate mechanically fastened to wall or enclosure adjacent to each TMGB. Nameplate shall be blue with ¼" high white lettering to read "TMGB-(name of enclosure or building)".

3.2 FIELD QUALITY CONTROL

A. Contractor using test equipment expressly designed for that purpose shall perform all ground resistance tests in conformance with IEEE Standard 1100. Contractor shall submit typewritten records of measured resistance values to Engineer for review and approval prior to energizing the system.

B. Obtain and record ground resistance measurements both from electrical equipment ground bus to the ground electrode and from the ground electrode to earth. Furnish and install additional bonding and add grounding electrodes as required to comply with the following resistance limits:

1. Resistance from ground bus to ground electrode and to earth shall not exceed 5 ohms unless otherwise noted.

2. Resistance from the farthest panelboard, loadcenter, switchboard or motor control center ground bus to the ground electrode and to earth shall not exceed 20 ohms maximum.

C. Obtain and record ground resistance measurements (DC, 60Hz, 10MHz, 20MHz, 33 MHz, 66MHz and 100MHz) both from each TMGB to the ground electrode and from the ground electrode to earth.

D. Inspection

1. The Engineer or Inspector prior to encasement, burial or concealment thereto shall review the grounding electrode and connections.

END OF SECTION

CONFORMED

SECTION 27 05 28

PATHWAYS FOR COMMUNICATION SYSTEMS

PART 1 - GENERAL

1.1 SUMMARY

A. Section includes

1. Provide all labor, materials and equipment necessary to complete the installation required for the items specified under this Section, including but not limited to electrical conduits; outlet, junction and pull boxes; and related supports.

B. Related sections

1. Where items specified in other Division 27 sections conflict with the requirements of this Section, the most stringent requirement shall govern.
    a. 27 05 26 – Grounding and Bonding for Electrical Systems
2. The requirements of this Section apply to all Division 27 work, as applicable.
3. Consult all other sections, determine the extent and character of related work and properly coordinate work specified herein with that specified elsewhere to produce a complete installation.

1.2 REFERENCES

A. Comply with the latest edition of the following applicable specifications and standards except as otherwise shown or specified:

1. ANSI –American National Standards Institute
    a. C33.91; Specification for Rigid PVC Conduit
    b. C80.1; Specification Rigid Steel Conduit, Zinc-Coated
    c. C80.3; Specification for Electrical Metallic Tubing, Zinc-Coated
    d. C80.6; Intermediate Metal Conduit (IMC), Zinc-Coated
2. CCR –California Code of Regulations, Title 24
    a. Part 2 -California Building Code (CBC); ICBO Uniform Building Code (UBC) with California amendments
    b. Part 3 -California Electrical Code(CEC); NFPA 70 National Electrical Code (NEC) with California amendments
3. NECA –National Electrical Contractors Association
    a. 101, Standard for Installing Steel Conduit (Rigid, IMC, EMT)
    b. 111, Standard for Installing Nonmetallic Raceways (RNC, ENT, LFNC) (ANSI)
4. NEMA –National Electrical Manufacturer’s Association
    a. FB 1; Fittings, Cast Metal Boxes, and Conduit Bodies for Conduit, Electrical Metallic Tubing, and Cable
    b. FB 2.10; Selection and Installation Guidelines for Fittings for Use with Non-flexible Electrical Metal Conduit or Tubing (Rigid Metal Conduit, Intermediate Metal Conduit, and Electrical Metallic Tubing)
    c. FB 2.20; Selection and Installation Guidelines For Fittings for Use With Flexible Electrical Conduit and Cable
    d. OS 1; Sheet-Steel Outlet Boxes, Device Boxes, Covers, and Box Supports

e. OS 3; Selection and Installation Guidelines for Electrical Outlet Boxes

f. RN 1; Polyvinyl-Chloride Externally Coated Galvanized Rigid Steel Conduit and Electrical Metallic Tubing.

g. TC 2; Electrical Plastic Tubing and Conduit

h. TC 3; PVC Fittings for Use with Rigid PVC Conduit and Tubing

i. TC 14; Reinforced Thermosetting Resin Conduit (RTRC) and Fittings

5. OSHPD Anchorage Pre-approvals

a. OPA-0003; Superstrut Seismic Restraint System

b. OPA-0114; B-Line Seismic Restraints

c. OPA-0120; Unistrut Seismic Bracing System

d. OPA-0242; Power-Strut Seismic Bracing System

6. UL –Underwriter's Laboratories, Inc.

a. 1; Standard for Flexible Metal Conduit

b. 6; Rigid Metal Electrical Conduit

c. 360; Standard for Liquid-Tight Flexible Steel Conduit

d. 514A; Metallic Outlet Boxes, Electrical

e. 514B; Fittings for Conduit and Outlet Boxes

f. 651; Schedule 40 & 80 PVC Conduit

g. 797; Electrical Metallic Tubing

h. 1242; Intermediate Metal Conduit

i. 1684; Reinforced Thermosetting Resin Conduit (RTRC) and Fittings

1.3 SYSTEM DESCRIPTION

A. Furnish, assemble, erect, install, connect and test all electrical conduits and related raceway apparatus required and specified to form a complete installation.

1.4 SUBMITTALS

A. Submit manufacturer's data for materials specified within this Section in accordance to Section 26 05 00.

1.5 QUALITY ASSURANCE

A. All materials, equipment and parts comprising the materials specified herein shall be new and unused, bearing UL labels where applicable.

B. Installation shall conform to the NECA installation guidelines unless otherwise indicated within this Section

PART 2 -PRODUCTS

2.1 MATERIALS

A. Conduits and Fittings

1. Rigid steel conduit (RMC)

a. Conduit: Standard weight, mild steel pipe, and zinc coated on both inside and outside by a hot dipping or shearardizing process manufactured in accordance with UL 6 and ANSI C80.1 specifications.

b. Fittings (couplings, elbows, bends, etc.)

1) Shall be steel or malleable iron.

2) Coupling and unions shall be threaded type, assembled with anti-corrosion, conductive and anti-seize compound at joints made absolutely tight to exclude water.

c. Bushings

1) Insulating bushings: Threaded polypropylene or thermosetting phenolic rated at 150°C minimum.

2) Insulating grounding bushing: Threaded cast body with insulating throat and steel “lay-in” ground lug.

3) Insulating metallic bushing: Threaded cast body with plastic insulated throat rated at 150°C minimum.

2. Coated rigid steel conduit (CRMC)

a. Conduit: Equivalent to RMC with a Polyvinyl chloride (PVC) coated bonded to the galvanized outer surface of the conduit. The bonding between the PVC coating and conduit surface shall be ETL PVC-001 compliant. The coating thickness shall be a minimum of 40mil.

b. Fittings (couplings, elbows, bends, etc.)

1) Equivalent to RMC above with bonded coating same as conduit.

2) The PVC sleeve over fittings shall extend beyond hub or coupling approximately one diameter or 1 1/2” whichever is smaller.

c. Bushing equivalent to RMC above.

3. Intermediate metallic conduit(IMC)

a. Conduit: Intermediate weight, mild steel pipe, meeting the same requirements for finish and material as rigid steel conduit manufactured in accordance with UL 1242 and ANSI C80.6 specifications.

b. Fittings (couplings, elbows, bends, etc.) equivalent to RMC above.

c. Bushing equivalent to RMC above.

4. Electrical metallic tubing (EMT)

a. Conduit: Cold rolled steel tubing with zinc coating on outside and protective enamel on inside manufactured in accordance with UL 797 and ANSI C80.3 specifications.

b. Couplings: Steel or malleable iron with compression type fastener via a nut.

c. Connectors: Steel or malleable iron with compression type fastener via a nut with plastic insulated throat rated at 150°C minimum.

5. Rigid non-metallic conduit (PVC)

a. Conduit: PVC composed Schedule 40, 90°C manufactured in accordance with NEMA TC 2 and UL 651 specifications.

b. Fittings: Molded PVC, slip on solvent welded type in accordance to NEMA TC 3.

6. Reinforced thermosetting resin conduit (RTRC)

a. Conduit: Fiber impregnated with a cured thermosetting resin compound in accordance with NEMA TC 14 and UL1684.

b. Fittings: Molded resin with glass reinforcement manufactured in the same process as the conduit bonded with an epoxy adhesive.

7. Flexible metallic conduit (FMC)

a. Conduit: Continuous, flexible steel spirally wound with zinc coating on both inside and outside in accordance with UL 1.

b. Connectors: Steel or malleable iron with compression type fastener via a nut with plastic insulated throat rated at 150°C minimum.

8. Liquidtight flexible metallic conduit (LFMC)

a. Conduit: PVC coated, continuous, flexible steel spirally wound with zinc coating on both inside and outside in accordance with UL 360.

b. Connectors: Steel or malleable iron with compression type fastener via a nut with plastic insulated throat rated at 150°C minimum.

9. Miscellaneous Fittings and Products

a. Conduit sealing bushings: Steel or cast malleable iron body and pressure clamps with PVC sleeve, neoprene sealing grommets and PVC coated steel pressure rings. Supplied with neoprene sealing rings between body and PVC sleeve.

b. Watertight cable terminators: One piece, compression molded sealing ring with PVC coated steel pressure disks, stainless steel screws and zinc plated cast iron locking collar.

c. Watertight cable/cord connectors: Liquidtight steel or cast malleable iron body with sealing neoprene bushing and stainless steel retaining ring.

d. Expansion fittings: Multi-piece unit of hot dip galvanized malleable iron or steel body and outside pressure bussing design to allow a maximum of 4” movement (2” in either direction). Furnish with external braid tinned copper bonding jumper. UL listed for both wet and dry locations.

e. Expansion/deflection couplings: Multi-piece unit comprised of a neoprene sleeve, internal flexible tinned copper braid attached to bronze end couplings with stainless steel bands. Coupling to provide minimum of 3/4” movement and 30 degrees deflection from normal. UL listed for both wet and dry locations.

f. Conduit bodies: Raintight, malleable iron, hot-dip galvanized body with threaded hubs, stamped steel cover, stainless steel screws and neoprene gasket.

g. Other couplings, connectors and fittings shall be equal in quality, material and construction to items specified herein.

B. Boxes

1. Outlet boxes

a. Standard: Galvanized one-piece of welded pressed steel type in accordance with NEMA OS 1 and UL 514. Boxes shall not be less than 4” square and at least 1 1/2” deep.

b. Concrete: Galvanized steel, 4” octagon ring with mounting lug, backplate and adapter ring type in accordance with NEMA OS 1 and UL 514. Depth as required by application.

c. Masonry: Galvanized steel, 3.75” high gang box in accordance with NEMA OS 1 and UL 514.

d. Surface cast metal: Cast malleable iron body, surface mounted box with threaded hubs and mounting lugs as required in accordance with NEMA OS 1 and UL 514. Furnish with ground flange, steel cover and neoprene gasket.

2. Pull and junction boxes

a. Sheet metal boxes: Standard or concrete outlet box wherever possible; otherwise use 16 gauge galvanized sheet metal, NEMA 1 box sized per CEC with machine screwed cover.

b. Cast metal boxes: Install standard cast malleable iron outlet or device box when possible.

c. Flush mounted boxes: Install overlapping cover with flush head screws.

d. In-ground mounted pull holes/boxes: Install pre-cast concrete box, sized per Drawing or CEC with pre-cast or traffic rated lid.

3. Floor boxes

a. Floor boxes shall be adjustable, cast metal body with threaded conduit openings, adjustable rings, brass flange or Lexan ring and cover plate with threaded plug. Include provisions to

accommodate surface mounted telephone or receptacle outlet, or flush floor mounted telephone or receptacle outlet where shown on Drawings.

C. Pull line/cord

1. Polypropylene braided line or Let-line #232 or equal of 1/8” diameter with a minimum break strength of 200 pounds.

PART 3 -EXECUTION

3.1 EXAMINATION

A. Thoroughly examine site conditions for acceptance of wire and cable installation to verify conformance with manufacturer and specification tolerances. Do not commence with work until all conditions are made satisfactory.

3.2 PREPARATION

A. Conduit

1. Provide all necessary conduit fittings, connectors, bushings, etc. required to complete conduit installation to meet the CEC/NEC and intended application whether noted, shown or specified within.
2. Location of conduit runs shall be planned in advance of the installation and coordinated with other trades.
3. Where practical, install conduits in groups in parallel vertical or horizontal runs that avoid unnecessary offsets.
4. All conduits shall be parallel or at right angles to columns, beams and walls whether exposed or concealed.
5. Conduits shall not be placed closer than 12” to a flue, parallel to hot water, steam line or other heat sources; or 3” when crossing perpendicular to the above said lines when possible.
6. Install exposed conduit as high as practical to maintain adequate headroom. Notify Engineer if headroom will be less than 102”.
7. Do not obstruct spaces required by Code in front of electrical equipment, access doors, etc.
8. The largest trade size conduit in concrete floors and walls shall not exceed 1/3 thickness or be spaced a less than three conduit diameters apart unless permitted by Engineer. All conduits shall be installed in the center of slab or wall, and never between reinforcing steel and bottom of floor slab.
9. Install additional pull boxes, not shown on Drawings, in sufficient quantities to facilitate pulling of conductors and cables such that total spacing does not exceed 150 feet or 270 degrees, total; and maximum pulling tension will not be exceeded.
10. When installing underground conduits to specified depth; depth shall be taken from finished grade as it will be at project completion. Should finish grade be above existing grade by an amount equal to or greater than specified depth, conduit shall be installed not less than 6” below existing grade.
11. Verify that information concerning finish grade is accurate, for should the underground run be less than the specified depth, Contractor may be required to re-install conduit to meet the required depth.
12. Unless otherwise specified, underground conduits shall be installed with top side not less than 24” below finished grade; this depth applies to all conduits outside of building foundations including those under walks, open corridors or paved areas.
13. Utility company service conduits installation depth shall be as directed by their respective specifications and requirements.

B. Boxes

1. Before locating outlet boxes, check Construction Documents for type of construction and make sure that there is no conflict with other equipment. Locate outlet boxes as shown and locate so as not to interfere with other Work or equipment.
2. Install all outlet boxes flush within walls, ceiling and floors except where installed within non-finished rooms, cabinetry, attic spaces or as indicated on Drawings.
3. Locate pull boxes and junction boxes within concealed, accessible locations where possible.
4. Do not install outlet boxes back-to-back with same stud space. Where shown back-to-back, offset as required, and fill void with sound dampening material where requested by Owner.
5. In fire rated walls separate boxes by 24” minimum and with stud member.
6. Adjust position of outlet boxes within masonry wall to accommodate course lines.

3.3 INSTALLATION

A. Conduit

1. Minimum conduit size shall be 3/4” unless otherwise indicated.
2. All conduit work shall be concealed unless otherwise indicated. Exposed conduits shall be permitted within unfinished rooms/spaces to facilitate installation.
3. Install conduit in complete runs prior to installing conductors or cables.
4. Make long radius conduits bends free from kink, indentations or flattened surfaces. Make bends carefully to avoid injury or flattening. Bends 1 1/4” size and larger shall be factory made ells, or be made with a manufactured mechanical bender. Heating of steel conduit to facilitate bending or that damage galvanized coating will not be permitted.
5. Remove burrs and sharp edges at end of conduit with tapered reamer.
6. Protect and cover conduits during construction with metallic bushings and bushing “pennies” to seal exposed openings.
7. Assemble conduit threads with anti-corrosion, conductive, anti-seize compound and tighten securely.
8. Install conduits shall that no traps to collect condensation exist.
9. Fasten conduit securely to boxes with locknuts and bushings to provide good grounding continuity.
10. Install pull cords/line within any spare or unused conduits of sufficient length to facilitate future cable installation.
11. Penetrations
    a. Locate penetrations within structural members as shown on Drawings and as directed by Architect or Engineer. Should it be necessary to notch any framing member, make such notching only at locations and in a manner as approved by Engineer.
    b. Do not chase concrete or masonry to install conduit unless specifically approved by Engineer.
    c. Cutting or holes
        1) Install sleeves for cast-in-place concrete floors and walls. After installing conduit through penetration, seal using dry-pack grouting compound (non-iron bearing, chloride free and non-shrinking) or fire rated assembly if rated floor or wall. Use escutcheon plate on floor underside to contain compound as necessary.
        2) Cut holes with a hole saw for penetrations through non-concrete or non-masonry members.
        3) Provide chrome plated escutcheon plates at all publicly exposed wall, ceiling and floor penetrations.
    d. Sealing

1) Non-rated penetration openings shall be packed with non-flammable insulating material and sealed with gypsum wallboard taping compound.

2) Fire rated penetration shall be sealed using a UL classified fire stop assembly suitable to maintain the equivalent fire rating prior to the penetration.

3) Use escutcheon plates to hold sealing or fire rated compound as necessary.

e. Waterproofing

1) Make penetrations through any damp-proofed/waterproofed surfaces within damp/wet locations as such as to maintain integrity of surface.

2) Install specified watertight conduit entrance seals at all below grade wall and floor penetrations.

3) At roof penetrations furnish roof flashing, counter flashing and pitch-pockets compatible to roof assembly.

4) Where possible conduits that horizontally penetrate a waterproof membrane shall fall away from and below the penetration's exterior side.

5) Make penetrations through floors watertight with mastic, even when concealed within walls or furred spaces.

12. Supports

a. Conduits shall be support and braced per OSHPD pre-approved anchorage systems when those methods are implemented and installed.

b. Sizes of rods and cross channels shall be capable of supporting 4 times and 5 times actual load, respectively. Anchorage shall support the combined weight of conduit, hanger and conductors.

c. Support individual horizontal conduit 1 1/2" and smaller by means of 2 hole straps or individual hangers.

d. Galvanized iron hanger rods sizes 1/4" diameter and larger with spring steel fasteners, clips or clamps specifically design for that purpose for 1 1/2" conduits and larger.

e. Support multi-parallel horizontal conduits runs with trapeze type hangers consisting of 2 or more steel hanger rods, preformed cross channels, 'J' bolts, clamps, etc.

f. Support conduit to wood structures by means of bolts or lag screws in shear, to concrete by means of insert or expansion bolts and to brickwork by means of expansion bolts.

g. Support multi-parallel vertical conduits runs with galvanized Unistrut, Power-Strut or approved equal type supports anchored to wall. Where multi-floored conduits pass through floors, install riser clamps at each floor.

h. Maximum conduit support spacing shall be in accordance with NECA Standard of Installation:

1) Horizontal runs:

a) 3/4" and smaller at 60" on centers, unless building construction prohibits otherwise, then 84" on centers.

b) 1" and larger at 72" on centers, unless building construction prohibits otherwise or any other condition, then 120" on centers.

2) Vertical runs:

a) 3/4" and smaller @ 84" on centers.

b) 1" and 1 1/4" @ 96" on centers.

c) 1 1/2" and larger @ 120" on centers.

d) Any vertical condition such as shaftways and concealed locations for any sized conduit, 120" on centers.

i. Anchorage for RMC/IMC supports unless otherwise specified:

1) < 1" IMC/RMC = #10 bolt/screw.

2) 1” IMC/RMC = 1/4” bolt/screw.
3) 1 1/2” and 2” IMC/RMC = 3/8” bolt/screw.
4) 3” IMC/RMC, 4” EMT = 1/2” bolt/screw.
5) > 3”IMC/RMC = 5/8” bolt/screw.

j. Anchorage for EMT supports unless otherwise specified:
1) < 1 1/2” EMT = #10 bolt/screw.
2) 1 1/2” EMT = 1/4” bolt/screw.
3) 2, 2 1/2” and 3” EMT = 3/8” bolt/screw.
4) 4” EMT = 1/2” bolt/screw.
5) > 4”EMT = 5/8” bolt/screw.

B. Boxes

1. Install boxes as shown on Drawings and as required for splices, taps, wire pulling, equipment connections and Code compliance.
2. Install additional pull boxes, not shown on Drawings, in sufficient quantities to facilitate pulling of conductors and cables such that total spacing does not exceed 150 feet or 270 degrees, total; and maximum pulling tension will not be exceeded.
3. Install plaster rings on all outlet boxes in stud walls or in furred, suspended or exposed ceilings. Covers shall be of a depth suited for installation.
4. Provide gasketed cast metal cover plates where boxes are exposed in damp or wet locations
5. Install access door for boxes installed within concealed locations without access.
6. Install approved factory made knockout seal where knockouts are not present.
7. Refer to Architectural interior elevations and details shown for exact mounting heights of all electrical outlets. In general, locate outlets as shown or specific and complies with Americans with Disabilities Act:
   a. Convenience outlets: +18”AFF or +6” above counter or splash.
   b. Local switches: +48”AFF or +6” above counter or splash.
   c. Telecommunication outlets: +18”AFF or +48”AFF for wall telephone or intercom device.
   d. Verify all mounting heights with Architectural Drawings, and where heights are not suited for construction or finish please consult Engineer or Architect.
8. Use conduit bodies to facilitate pulling of conductor or cables or change conduit direction. Do not splice within conduit bodies.
9. Enclose pull box with additional rated gypsum board as necessary to maintain wall’s original fire rating.
10. Install galvanized steel coverplates on all open boxes within dry listed areas.
11. Install in-ground pull holes/boxes flush to grade finish at finished areas or 1” above finished landscaped grade. Seal all conduits terminating in pull hole/box watertight. Install and grout around bell ends where shown. Cover and lids shall be removable without damage to adjacent finish surfaces.
12. Support
    a. Accurately place boxes for finish, independently and securely supported by adequate blocking or manufacturer channel type heavy-duty box hangers for stud walls. Do not use nails to support boxes.
    b. Support boxes independent of conduit system.
    c. Mount boxes installed within ceilings to 16 gauge metal channel bars attached to main runners or joists.

d. Support boxes within suspended acoustical tile ceilings directly from structure above when light fixture are to be installed from box.

e. Use auxiliary plates, bar or clips and grouted in place for masonry, block or pour-in-place concrete construction.

3.4 APPLICATION

A. Conduit

1. RMC/IMC suitable for all damp, dry and wet locations except when in contact with earth. IMC not suitable for hazardous locations as stated within CEC/NEC.
2. CRMC suitable for damp or wet locations, concealed within concrete or in contact with earth.
3. EMT suitable for exposed or concealed dry, interior locations.
4. PVC/RTRC suitable for beneath ground floor slab, except when penetrating, and direct earth burial. Do not run exposed within concrete walls or in floor slab unless indicated on Drawings or per Engineer's permission.
5. FMC suitable for dry locations only for connections to motors, transformers, vibrating equipment/machinery, controllers, valves, switches and light fixtures in less than 6 foot lengths.
6. LFMC application same as FMC above but for damp or wet locations.

B. Termination and joints

1. Use raceway fittings compatible with associated raceway and suitable for the location.
2. Raceways shall be joined using specified couplings or transitions where dissimilar raceway systems are joined.
3. Conduits shall be securely fastened to cabinets, boxes and gutters using (2) two locknuts and insulating bushing or specified insulated connector. Where joints cannot be made tight and terminations are subject to vibration, use bonding jumpers, bonding bushings or wedges to provide electrical continuity of the raceway system. Use insulating bushings to protect conductors where subjected to vibration or dampness. Install grounding bushings or bonding jumpers on all conduits terminating at concentric or eccentric knockouts.
4. Terminations exposed at weatherproof enclosures and cast outlet boxes shall be made watertight using specified connectors and hubs.
5. Stub freestanding equipment conduits through concrete floors for connections with top of coupling set flush with finished floor. Install plugs to protect threads and entrance of debris.
6. Install specified cable sealing bushings on all conduits originating outside the building walls and terminating within interior switchboard, panel, cabinet or gutters. Install cable sealing bushings or raceway seal for conduit terminations in all grade level or below grade exterior pull, junction or outlet boxes.
7. Where conduits enter building from below grade inject into filled raceways pre-formulated rigid 2 lbs. density polyurethane foam suitable for sealing against water, moisture, insects and rodents.
8. Install expansion fitting or expansion/deflection couplings per manufacturer's recommendations where:
   a. Any conduit that crosses a building structure expansion joint; secure conduit on both sides to building structure and install expansion fitting at joint.
   b. Any conduit that crosses a concrete expansion joint; install expansion/deflection at joint.
   c. Any conduit greater than 1-1/4" is routed along roof top in runs greater than 100 feet; install expansion fittings every 100 feet.
   d. Engineer may allow FMC or LFMC in lieu of expansion fitting or expansion/deflection couplings on conduits 2" and smaller within accessible locations upon further review and written consent.

C. Boxes

1. Standard type suitable for all flush installations and all dry concealed locations.
2. Concrete type suitable for all flush concrete installations.
3. Masonry type suitable for all flush concrete and block installations.
4. Surface cast meta type suitable for all exposed damp and wet surface mounted locations, and dry surface mounted locations less than 96” from finished floor

END OF SECTION

CONFORMED

SECTION 27 11 16

DATA RACKS AND ENCLOSURES

PART 1 - GENERAL

1.1 SUMMARY

A. Section includes

1. Provide all labor, materials and equipment necessary to complete the installation required for the items specified under this Section, including but not limited to telecommunication cabinets, racks and enclosures.

B. Related sections

1. Where items specified in other Division 27 sections conflict with the requirements of this Section, the most stringent requirement shall govern.

   a. 27 05 26 – Grounding and Bonding for Communications

2. The requirements of this Section apply to all Division 27 work, as applicable.

3. Consult all other sections, determine the extent and character of related work and properly coordinate work specified herein with that specified elsewhere to produce a complete installation.

1.2 REFERENCES

A. Comply with the latest edition of the following applicable specifications and standards except as otherwise shown or specified:

1. CCR –California Code of Regulations, Title 24

   a. Part 2 -California Building Code (CBC); ICBO Uniform Building Code (UBC) with California amendments

2. EIA –Electronic Industries Alliance

   a. 310; Cabinets, Racks, Panels, and Associated Equipment

3. UL -Underwriters Laboratories, Inc.

   a. 1863; Standard for Communications-Circuit Accessories

1.3 SUBMITTALS

A. Submit manufacturer’s data for grounding materials specified within this Section in accordance to Section 26 05 00.

1.4 QUALITY ASSURANCE

A. All materials, equipment and parts comprising the materials specified herein shall be new and unused, bearing UL labels where applicable.

PART 2 -PRODUCTS

2.1 EQUIPMENT ENCLOSURE SYSTEMS

A. General:

1. Provide type, size and quantity as shown on Drawings. Unless otherwise noted, completely enclose interior of enclosure, or ensembles of enclosures with equipment, blank or vent panels, including sides and top. Provide rear access door except at enclosures flush with the wall behind or enclosures which are portable.

2. Provide enclosure systems conforming to the latest CBC requirements for seismic design.

3. The drawings show a scheme of heat management based on generic conventionally packaged components to convey design intent. Coordinate fans, blank panels, vent panels and related heat management provisions with products provided.
4. Equipment Enclosures: Provide each bay with basic frame and pairs of adjustable mounting angles located at front and rear of each bay, angles tapped #10-32, EIA 310-D universally spaced. At each bay, provide pontoon base, solid top panel and with fan where noted or scheduled and locking rear door. Except where otherwise indicated, at each ensemble of bays, provide end (side) panels to provide complete enclosure.

B. Intermediate Distribution Enclosure
1. Drawing Reference: WE##, where ## indicates minimum quantity of rack unit spaces.
2. Construction
   a. Wall mounted, three part sectional, with:
      1) Fixed mount wall terminal section.
      2) Double hinge design for independent opening/motion of front door and main body.
      3) Plexiglas locking front door with 16 gauge steel wall or as shown on Drawings.
   b. Fully-adjustable 19” rails.
   c. Combined depth of swing-away center section and fixed rear section to be not less than 24”.
   d. Provide lockable hasp to secure rack sections. Owner will supply padlock.
   e. Enclosure shall be phosphate pre-treated and finished in a durable black powder coat finish.
   f. Opening, 4” minimum for exhaust fan mounting on main body section. Provide fan and thermostat as described within this Section.
   g. Manufacturers
      1) Rittal EL Series, B-Line E2 Series or approved equal.

C. Intermediate Distribution Cabinet
1. Drawing Reference: WC##, where ## indicates minimum quantity of rack unit spaces.
2. Construction
   a. Wall mounted, two piece design, with:
      1) Fixed mount wall terminal section.
      2) Solid locking front door with 16 gauge steel construction.
   b. Provision for enclosed, integrated duplex receptacle when shown on Drawings.
   c. Enclosure shall be phosphate pre-treated and finished in a durable black powder coat finish.
   d. Opening, 4” minimum for exhaust fan mounting. Provide fan and thermostat as described within this Section.
   e. Manufacturers
      1) Hubbell Rebox series, Chatsworth ThinLine II or approved equal.

D. Full Height Equipment Relay Rack, Two Post System
1. Drawing Reference: 2RR##, where ## indicates minimum quantity of rack unit spaces.
2. Construction
   a. Channels shall be 12 gauge steel minimum with #10-32 mounting holes.
   b. Rack shall be phosphate pre-treated and finished in a durable black powder coat finish.
3. Manufacturers
   a. Hubbell, Chatsworth, B-Line or approved equal.

E. Full Height Equipment Relay Rack, Four Post System

1. Drawing Reference: 4RR##, where ## indicates minimum quantity of rack unit spaces.
2. Construction
    a. Channels shall be 12 gauge steel minimum with #10-32 mounting holes.
    b. Rack shall be phosphate pre-treated and finished in a durable black powder coat finish.
3. Manufacturers
    a. Hubbell, Chatsworth, B-Line or approved equal.

F. Full Height Equipment Enclosure
1. Drawing Reference: FE##, where ## indicates minimum quantity of rack unit spaces.
2. Construction
    a. Channels shall be 12 gauge steel minimum with #10-32 mounting holes. All steel panels and door shall be 16 gauge CRS minimum.
    b. Enclosure shall be phosphate pre-treated and finished in a durable black powder coat finish.
    c. Removable front and rear locking doors with universal swing capability. Provide front Plexiglas door and rear steel, vented unless noted otherwise on Drawings.
    d. Field removable steel side panels.
    e. Install top panel with 2 openings minimum for exhaust fan mounting. Provide 2 fans and thermostat as described within this Section. Install wire guards over unused openings.
    f. Adjustable feet for leveling.
    g. Capable, with proper option, to comply with CBC Zone 4 seismic requirements.
    h. EIA 310-D compliant and UL listed.
3. Manufacturers
    a. Hubbell, Chatsworth, B-Line or approved equal.

2.2 RACK PANELS AND ACCESSORIES:

A. Rack Mounting Screws:
1. Screws 10-32; length as required for at least ¼" excess when fully seated; oval head with black plastic non marring cup washer or equivalent ornamental head; nickel, cadmium or black plated; Phillips, Allen Hex, Square-Tip or Torx drive. Slotted screws are not acceptable.

B. Vertical Wire Management Section:
1. All Steel construction with black finish.
2. Total cross-sectional area of vertical tray shall be greater than 26 square-inches.
3. Universal hole pattern to bolt to rack channel.
4. Provide matching de-attachable front covers.
5. Manufacturers
    a. Panduit, Hubbell or approved equal.

C. Horizontal Wire Management Panel (1 or 2 Rack Unit(s)):
1. All Steel construction with black finish.
2. Panel without cover will not be accepted.
3. Manufacturers
    a. Panduit, Hubbell or approved equal.

D. Blank Panels:
1. Flanged steel construction with black finish.

2. Manufacturers
    a. Middle Atlantic Products, Atlas/Soundolier or approved equal.

E. Vent Panels:
1. Flanged steel construction with black finish.
2. Manufacturers
    a. Middle Atlantic Products, Atlas/Soundolier or approved equal.

2.3 EQUIPMENT ENCLOSURE VENTILATION:

A. Enclosure exhaust fan
1. Characteristics
    a. UL labeled 4 ½" diameter fan of smooth ball bearing design.
    b. Electrical: 115Vac, 60Hz
    c. Air flow: approximately 50CFM
    d. Sound level: <40dBA
2. Supply metal wire guard where exposed.
3. Manufacturers
    a. Comair Rotron, Rittal or approved equal.

B. Enclosure thermostat
1. Characteristics
    a. UL labeled device with bi-metal temperature sensitive element.
    b. Temperature control range from +10°C to +60°C
    c. Electrical
        1) Requirements: 115Vac, 60Hz
        2) Output Contact: 1A minimum at 120Vac
2. Manufacturers
    a. Rittal, Honeywell or approved equal.

2.4 EQUIPMENT ENCLOSURE POWER, PROTECTION AND SIGNAL GROUNDING

A. Receptacle Strip, One(1) Circuit.
1. Features/Construction:
    a. Receptacles
        1) Outlets shall be NEMA 5-15R with isolated ground.
        2) Provide 1 duplex receptacle for every 12" of rack height with no fewer than 2 and no greater than 7 duplex receptacles for any one rack/enclosure.
    b. Power strip shall be ready for hardwire installation with junction box or 36" minimum flexible whip connection.
    c. All steel construction with durable powder coat finish.
    d. UL labeled.
    e. Provide mounting hardware as necessary to rack chassis.
2. Acceptable
    a. Middle Atlantic Products, Wiremold or approved equal.

PART 3 -EXECUTION

3.1 INSTALLATION

A. Combustible material, other than incidental trim of indicated equipment, is prohibited within equipment racks.

B. Access shall not require de-mounting or de-energizing of equipment. Install access covers, hinged panels or pull-out drawers as required to insure complete access to terminals and interior components.

C. Provide adequate work room clearances per CEC Article 110.

D. Provide permanent labels for all equipment devices installed within rack(s)/enclosure(s).

E. Ventilation System

1. Connect thermostat and exhaust fans to enclosure's receptacle/branch circuit, and comply with CEC for wiring and overcurrent protection.

2. Mount thermostat at rear of enclosure, closest to top of either one third the distance from enclosure top or highest mounted active hardware component.

3. Set thermostat at +32°C (+90°F).

F. Anchorage wall and floor mounted racks/enclosures to structural members to withstand seismic forces based upon rack/enclosure's maximum load capacity.

END OF SECTION

CONFORMED

SECTION 27 15 13

COPPER TELECOMMUNICATIONS/DATA CABLING AND DEVICES

PART 1 - GENERAL

1.1 SUMMARY

A. Section includes

1. Provide all labor, materials and equipment necessary to complete the installation required for the items specified under this Section, including but not limited to copper data communication cabling systems and copper based telecommunication, which include.

   a. Category 6 cabling

      1) Provide scheduled station plates at each indicated location. Provide labeled Category 6 modules in the plates, and document per Specifications.

      2) Homerun all station cabling from each universal Category 6 data jack to the indicated MDF or IDF.

      3) Provide Category 6 patch panels where indicated. Terminate and test Category 6 cabling as detailed within the Specifications.

      4) Terminate, test and document Category 5E cabling as detailed within the Specifications.

   b. Category 3, RUS (REA) and USOC telephone cabling

      1) Provide scheduled station plates at each indicated location.

      2) Homerun all station cabling from each telephone jack to indicated cabinet/telephone backboard.

      3) Provide punch blocks as necessary; terminate and test as detailed within the Specifications.

B. Related sections

1. Where items specified in other Division 27 sections conflict with the requirements of this Section, the most stringent requirement shall govern.

   a. 27 05 26 – Grounding and Bonding for Communications

   b. 27 11 16 – Data Racks and Enclosures

   c. 27 05 28 – Pathways for Communication System

2. The requirements of this Section apply to all Division 27 work, as applicable.

3. Consult all other sections, determine the extent and character of related work and properly coordinate work specified herein with that specified elsewhere to produce a complete installation.

1.2 REFERENCES

A. Comply with the latest edition of the following applicable specifications and standards except as otherwise shown or specified:

1. ANSI –American National Standards Institute

   a. ISO/IEC 11801; Information technology - Generic cabling for customer premises

2. CCR –California Code of Regulations, Title 24

   a. Part 3 -California Electrical Code(CEC); NFPA 70 National Electrical Code (NEC) with California amendments

3. CFR –Code of Federal Regulations
    a. Title 7 –Agriculture, Part 1755 – Telecommunications Standards and Specifications for Materials, Equipment and Construction
    b. Title 47 –Telecommunication, Part 68 – Connection of Terminal Equipment to the Telephone Network.
4. TIA/EIA – Telecommunications Industry Association/Electronic Industries Alliance
    a. Wiring/Cabling Standards
        1) TIA/EIA-568-B.1; Commercial Building Telecommunications Cabling Standard - Part 1: General Requirements
        2) TIA/EIA-568-B.2; Commercial Building Telecommunications Cabling Standard - Part 2: Balanced Twisted Pair Cabling Components
        3) TIA/EIA-569-A; Commercial Building Standards for Telecommunications Pathways and Spaces
        4) TIA/EIA-606; Administration Standard for the Telecommunications Infrastructure of Commercial Buildings
        5) TIA/EIA/IS-729; Technical Specifications for 100 Ohm Screened Twisted-Pair Cabling
        6) TIA/EIA-758; Customer Owned Outside Plant Telecommunications Cabling Standard
        7) TSB67; Transmission Performance Specifications for Field Testing of Unshielded Twisted-Pair Cabling Systems
        8) TSB95; Additional Transmission Performance Guidelines for 4-Pair 100 Category 5 Cabling
5. ICEA –Insulated Cable Engineers Association
    a. S-56-434; Polyolefin Insulated Communications Cables For Outdoor Use
    b. S-80-576; Category 1 & 2 Individually Unshielded Twisted Pair Indoor Cables for Use in Communications Wiring Systems
    c. S-90-661; Category 3, 5, & 5e Individually Unshielded Twisted Pair Indoor Cable for Use In General Purpose and LAN Communication Wiring Systems
    d. S-101-699; Standard For Category 3 Individually Unshielded Twisted Pair Indoor Cable For Use In General Purpose Non-Lan Telecommunication Wiring Systems
6. IEEE –Institute of Electrical and Electronic Engineers
    a. C2; National Electrical Safety Code (NESC)
    b. 802.3; Information Technology -Local and Metropolitan Area Networks
    c. 820; Standard Telephone Loop Performance Characteristics
7. NECA –National Electrical Contractors Association
    a. NECA/BICSI 568; Standard for Installing Commercial Building Telecommunications Systems
8. UL –Underwriters Laboratories, Inc.
    a. 444; Communications Cables
    b. 497; Standard for Protectors for Paired-Conductor Communications Circuits
    c. 1581; Reference Standard for Electrical Wires, Cables, and Flexible Cords
    d. 1666; Standard Test for Flame Propagation Height of Electrical and Optical-Fiber Cables Installed Vertically in Shafts

e. 1685; Standard for Vertical-Tray Fire-Propagation and Smoke-Release Test for Electrical and Optical-Fiber Cables

f. 1863; Standard for Communications-Circuit Accessories

9. U.S. Department of Agriculture, Rural Utilities Service (RUS), formerly Rural Electrification Administration (REA) Standards

a. PC-2; Splicing Plastic Insulated Cables

b. PC-4; Acceptance Tests and Measurements of Telephone Plant

c. PE-22; Aerial and Underground Telephone Cable

d. PE-33; Shield Bonding Connectors

e. PE-39; Filled Telephone Cables

f. PE-52; Telephone Cable Splicing Connectors

g. PE-60; Trunk Carrier Systems

h. PE-74; Filled Splice Closures

i. PE-87; Terminating (TIP) Cable

j. PE-89; Filled Telephone Cable with Expanded Insulation

k. TE&CM Section 644; Design and Construction of Underground Cable

1.3 SYSTEM PERFORMANCE STANRDARDS

A. Voice copper plant

1. To Universal Service Ordering Code (USOC) Standards (CFR Title 47, Part 68, Subpart F, Section 68.502) and other appropriate authorities.

2. Where voice plant cabling is specified for connection to RJ-11 or RJ-14 jacks conform to USOC and Category 3 standards as demonstrated using the appropriate test equipment.

B. Category 6 copper cabling plant:

1. To applicable EIA/TIA standards using a digital cable analyzer as specified herein.

1.4 SUBMITTALS

A. Submit manufacturer's data for materials specified within this Section in accordance to Section 26 05 00.

1.5 QUALITY ASSURANCE

A. All materials, equipment and parts comprising the materials specified herein shall be new and unused, bearing UL labels where applicable.

B. Installer Qualifications

1. The work performed under this Section shall be certified by the manufacturer of the equipment and components being furnished and be authorized by the manufacturer to install and convey the product warranty and performance guarantee to the Owner upon completion of Contract.

2. Installing Contractor must have a minimum of three years previous experience in data communications and/or telecommunication systems installation. All Contractors and/or Vendors supplying all or parts of the work described herein shall supply three project references within the Submittal package at the Engineer's request, which substantiate the Contractor/Vendors' previous experience as noted herein.

C. Testing Equipment

1. Furnish in conformance with the applicable requirements of this Section.
2. Test systems using at least one each of the following test measurement devices or approved functional equivalents:
    a. Digital cable analyzer with applicable copper and/or fiber testing standards required within this Section.
    b. Cabling plant tester capable of detecting shorts, opens, reversals and miswires.
    c. Tone test set capable of analyzing line condition of voice lines.
    d. Any other items of equipment or materials required to demonstrate conformance with the Contract Documents.

1.6 DELIVERY, STORAGE AND HANDLING

A. Wire shall be in original unbroken package. Obtain approval of Inspector or Engineer before installation of wires.

B. Handle carefully to avoid damage to internal components, enclosure and finish.

C. Store in a clean, dry environment. Maintain factory packaging and, if required, provide an additional cover to protect enclosure in harsh environments.

1.7 WARRANTY

A. Furnish guarantee in accordance with and in form required under Section 26 05 00.

B. Provide 15 year manufacturer's warranty covering application assurance, product, cable, and labor for installations performed by a certified installer using the manufacturer's connecting hardware and qualified cables.

PART 2 -PRODUCTS

2.1 DATA/VOICE CATEGORY-6 RATED COPPER CABLES

A. General
    1. Exceeds EIA/TIA-568 Category 6 requirements and tested to 300Mhz.
    2. Conductors shall be no small than 24AWG solid annealed bare copper.
    3. Outdoor, underground cables must be UL listed for wet applications.
    4. Cabling construction and use shall comply with CEC Article 800.

B. Indoor, General (Type CM/CMG/CMR/CMP)
    1. Drawing Reference: UTP6-4
    2. Cables installed within vertical shafts or risers shall be Type CMR or CMP listed.
    3. Construction: Thermoplastic insulated 8 conductor (4 pair) assembly with flame retardant PVC jacket.
    4. Manufacturer: Commscope UltraMedia, Mohawk AdvanceNet, Superior Essex NetGain or approved equal.

C. Indoor, Plenum (Type CMP)
    1. Drawing Reference: UTP6-4P
    2. Construction: FEP/PE insulated 8 conductor (4 pair) assembly with low smoke PVC/FEP jacket.

3. Manufacturer: Commscope UltraMedia, Mohawk AdvanceNet, Superior Essex NetGain or approved equal.

D. Outdoor, Underground

1. Drawing Reference: UTP6-4OP
2. Construction: FEP/PE insulated 8 conductor (4 pair) assembly with floodant compound and PE jacket.
3. Manufacturer: Mohawk AdvanceNet or approved equal.

E. Indoor, Shielded (Type CM/CMG/CMR/CMP)

1. Drawing Reference: STP6-4
2. Construction: FEP/PE insulated 8 conductor (4 pair) with an overall tape/drain shield and flame retardant PVC or low smoke PVC/FEP jacket.
3. Manufacturer: Mohawk AdvanceNet or approved equal.

F. Outdoor, Underground Shielded

1. Drawing Reference: STP6-4OP
2. Construction: PE/PVC insulated 8 conductor (4 pair) with an overall tape/drain shield, floodant compound and PE/PVC jacket.
3. Manufacturer: Mohawk AdvanceNet or approved equal.

2.2 TELEPHONE PLANT COPPER CABLES

A. General

1. Cables which interconnect interior distribution centers and terminate at station jacks shall conform to ICEA S-80-576, Category 1 or Category 3 standards.
2. Conductors shall be 22AWG solid annealed bare copper with minimum pair counts indicated on the plans.
3. Outdoor, underground cables must be UL listed for wet applications.
4. Cabling construction and use shall comply with CEC Article 800.

B. Indoor, General (Type CM/CMG/CMR/CMP)

1. Drawing Reference: UTP-##, where ## refers to required pair count
2. Cables installed within vertical shafts or risers shall be Type CMR or CMP listed.
3. Construction: Thermoplastic insulated conductors situated as paired assemblies with a flame retardant PVC jacket.
4. Manufacturer: Belden, Mohawk or approved equal.

C. Indoor, Plenum (Type CMP)

1. Drawing Reference: UTP-##P, where ## refers to required pair count
2. Construction: FEP/PE insulated conductors situated as paired assemblies with a low smoke PVC/FEP jacket
3. Manufacturer: Belden, Mohawk or approved equal.

D. Outdoor, Underground Within Duct

1. Less than (≤) 4 pair trunk cables
   a. Drawing Reference: STP-##OP, where ## refers to required pair count

b. Construction: Polyolefin, PE or PVC insulated conductors situated as paired assemblies with a foil shield, floodant compound and PE jacket.

c. Manufacturer: Belden, Westpenn Aquaseal or approved equal.

2. Greater than (>) 4 pair trunk cables

a. Drawing Reference: STP-##OP, where ## refers to required pair count

b. Construction:

1) Shall be RUS (REA) PE-89 listed, and suitable for direct burial.

2) PE jacket with aluminum tape shield and flooded core assembly.

3) The core assembly shall consist of twisted pair cables with : polyolefin insulation.

c. Manufacturer: General Cable, Superior Essex SEALPIC-FSF or approved equal.

2.3 DATA/VOICE STATION JACKS & MODULES

A. General Jack and Module Requirements

1. Meets or exceeds the following configuration and performance standards where applicable:

a. EIA/TIA 568B

b. ISO/IEC 11801, Class E

c. UL1863

d. CEC/NEC Article 800

e. FCC Part 68

2. High impact, flame retardant thermoplastic.

3. Integral locking mechanism upon insertion of a modular plug.

B. Voice jack USOC grade

1. Six (6) position, RJ25 configuration jack conforming to USOC requirements.

2. Manufacturers

a. Leviton, Siemon or approved equal.

C. Voice and/or data jack, Category 3

1. Eight (8) position, RJ45 configuration jack conforming to EIA/TIA 568B and USOC requirements.

2. Manufacturers

a. Leviton, Siemon or approved equal.

D. Data jack Category 6

1. Eight (8) position, RJ45 configuration jack conforming to EIA/TIA 568B requirements.

2. Manufacturers

a. Leviton eXetreme, Siemon Ultra Max or approved equal.

2.4 TELECOMMUNICATION STATION PLATES

A. Modular plates

1. Construction

a. Modular, with snap-in receptacle options as scheduled.

b. Single gang plate size and mounting.

c. Options for 1 to 6 modular jacks per plate.

d. Plate face shall be nylon; color shall be compatible with adjacent wall finish, unless otherwise indicated.

e. Integral labeling provided for plate identifier and identifier for each receptacle on the plate. Provide as follows:

1) Plate nominally 1-½" by ½"recessed slot with clear plastic cover over paper label. See labeling requirements in Part 3 of this Section.

2) Receptacle identifier(s) shall be iconic or literal descriptions of each receptacle type.

f. System shall provide at minimum the following receptacle options:

1) RJ45 Category 3 or RJ25 voice

2) RJ45 Category 6 data

3) 75Ω BNC

4) 75ΩF

5) Phono (RCA) type

6) ST fiber adapter

7) SC fiber adapter

8) S video

9) Blank plate fillers as required to fill unused area.

2. Manufacturers

a. Leviton QuickPort MOS, Siemons CT or approved equal

B. Wall phones plates (non-VOIP or Category-6 jack type)

1. Construction

a. Single gang plate size and mounting.

b. Plate face shall be stainless steel with 2 mounting stud type screws for mounting of telephone handset; unless otherwise indicated.

c. Jack shall be USOC voice grade as described above.

2.5 CABLE TERMINATION EQUIPMENT AND RELATED, CATEGORY RATED

A. Data Patch Panels, Category 6 Rated, Rack Mounted

1. Drawing Reference: ##C6PP, where ## refers to port count.

2. Functions/Features

a. 19" EIA rack mountable.

b. 24 ports per one (1) EIA rack unit (1.75") minimum, unless otherwise noted on Drawings.

c. Keyed, block form RJ-45/Category 6 jacks and 110 terminations meeting specifications elsewhere herein.

1) Arranged in rows on steel panel.

2) Jacks on front and terminations on rear.

d. Port identifier label space on front.

e. Provide wire management rings in a ratio of at least 4 rings for every 24 ports.

3. Manufacturers

a. Leviton, Siemon or approved equal.

B. Category 3 Terminal Block with Pre-Wired RJ21C Connector

1. Drawing reference: 110PWTB##, where ## refers to pair count.

2. Features/Functions

a. Type 110 terminal block with pre-wired RJ21C 50 pin connector on block or on end of pigtail stub cable.

b. Meets Category 3 specifications.

3. Manufacturers

a. Siemon S110A series, Siemon S700 or approved equal.

C. Category 3 Rack Mount Patch Panels with Pre-Wired RJ21C Connector

1. Drawing reference: ##110PWC3PP, where ## designates port count.

2. Features/Functions/Construction

a. 19” EIA rack mount panel.

b. Front face: RJ45 jacks

c. Rear face: Pre-wired RJ21C 50 pin connector(s).

d. Printed Circuit board linking RJ45’s to RJ21C – all four pairs wired straight through.

e. Meets Category 3.

f. At least 24 Jacks per rack unit (RU).

3. Manufacturers

a. Siemon, Signamax or approved equal.

2.6 MISCELLANOUS DEVICES

A. Shield Connectors

1. Shield connectors shall make a stable, low-impedance electrical connection between the shield of the communications cable and a conductor such as a strap, bar or wire.

2. The connector shall be made of tin-plated tempered brass.

3. RUS PE-33 compliant.

4. Manufacturers

a. Preformed Line Products Servi-Bond or approved equal.

B. Grounding Braid

1. Ground braid shall provide low electrical impedance connections for dependable shield bonding.

2. The braid shall be made from 1/2” wide flat tin-plated copper, length as required.

3. Provide eyelets as necessary for bonding purposes.

4. Manufacturers

a. Thomas Betts, 3M or approved equal.

PART 3 -EXECUTION

3.1 EXAMINATION

A. Verify that all raceways have been de-burred and properly joined, coupled, and terminated prior to installation of cables. Verify that all raceways are clear of foreign matter and substances prior to installation of wire or cable.

B. Inspect all conduit bends to verify proper radius. Comply with Code and cable manufacturer requirements for minimum permissible radius and maximum permissible deformation.

3.2 INSTALLATION

A. Separation of Wires: Comply with EIA/TIA-569 rules and CEC/NEC 800-52 for separation of unshielded copper voice and data system cables from potential EMI sources, including electrical power lines and equipment.

B. All necessary interconnections, services, and adjustments required for a complete and operable system shall be provided. All installation work must be done in accordance with the safety requirements set forth in the general requirements of IEEE C2 and CEC/NEC 800.

C. Unless otherwise noted, all trunk and backbone cables and conductors shall have surge and ground protection installed at each end which meets RUS PE-60 requirements. Refer to requirements herein and within the referencing Section as to the acceptable products in each application.

D. Wire and cable installation:

1. All wire and cable shall be continuous and splice-free for the entire length of run between designated connections or terminations.
2. At designated splices, maintain conductor color code across all splices.
3. Copper conductor voice cable outside plant splicing shall be accomplished in accordance with RUS PC-2.
4. All shielded cables shall be insulated. Do not permit shields to contact conduit, raceway, boxes, panels or equipment enclosures.
5. Within buildings, make splices only in designated terminal cabinets and/or on designated equipment backboards.
6. Outdoor splices shall not be permitted except where specifically noted or where required by the run length. Where run lengths require outdoor splices not noted on the drawings, notify Engineer in writing for direction before proceeding.
7. Do not subject wire and cable to tension greater than that recommended by the cable manufacturer. Use multi-spool rollers where cable is pulled in place around bends. Do not pull reverse bends.
8. Provide a box loop for all wire and cable routed through junction boxes or distribution panels. Provide tool formed thermal expansion loops at cable at manholes, handholes and at both sides of all fixed mounted equipment. Cable loops and bends shall not be bent at a radius greater than that recommended by the manufacturer.
9. Secure all wire and cable run vertically for continuous distances greater than thirty (30) feet. Secure robust non-coaxial cables with screw-flange nylon cable ties, kellem grip or similar approved devices appropriate to weight of cable. For all other cables, provide symmetrical conforming nonmetallic bushings or woven cable grips appropriate to weight of cable.
10. Where drawings specifically permit use of exposed cable installation in Plenum and/or Suspended Ceiling voids, conform to the following:
    a. Conform to EIA/TIA 569 with respect to separation from power and radio frequency (RF) sources. Provide at least twice the listed separation at fluorescent light fixtures, ballasts and similar high intensity EMF sources (including but not limited to motors, transformers and copiers).

b. Support: Provide support for all cabling. Do not place or attach directly to T-bar grid, concealed spline grid, flexible or rigid ductwork, HVAC registers, sprinkler piping or fixtures, light fixtures.

1) Provide supports at least 48” on center, with cables installed with slight sag to ensure conformance with EIA TSB40 tensioning and stress limits.

c. Placement: Do not obscure access to access doors, hatches, air dampers, valves, cable trays, junction boxes, pull boxes or similar areas of access.

d. Place EMT pipe sleeves at all wall penetrations. Fire stop sleeves and cables where penetrating a rated wall with an approved UL assembly.

11. Wiring practices

a. Land all non-coaxial field wiring entering each equipment rack at specified terminal devices prior to connection to any equipment or devices within racks. At Contractor’s option and at no additional costs to Owner, such terminals may be located in the equipment racks or in the terminal cabinets provided.

b. Apply all crimp connectors only with manufacturer’s recommended ratchet type tooling and correct crimp dies for connector and wire size; pliers type crimp tooling shall not be acceptable.

c. Coordinate insulation displacement (quick connect) terminal devices with wire size and type. Comply with manufacturer’s recommendations, and make connections with automatic impact type tooling set to a recommended force.

d. Make all connections to screw-type barrier blocks with insulated cirmp-type spade lugs. Lugs are not required at captive compression terminal type blocks. Provide permanent designation strips designed for use with the terminal blocks provided. Make neat, intelligible markings with indelible markers equivalent to “Sharpie”.

e. Tin terminated shield drain wires and insulate with heat shrinkable tubing.

f. Use only rosin core 60/40 tin/lead solder for all solder connections.

g. Dress, lace or harness all wire and cable to prevent mechanical stress on electrical connections. No wire or cable shall be supported by a connection point. Provide service loops where harness of different classes cross or where hinged panels are to be interconnected.

h. Termination and build-out resistors and related circuit correction components shall be visible. Do not install in connector shells or internally modify equipment. Show locations on Record Drawings.

i. Correct any and all of the following unacceptable wiring conditions:

1) Deformed, brittle or cracked insulation.

2) Torn or worn cable jacket.

3) Excessively scored cable jackets

4) Insulation shrunken or stripped further than 1/8” away from the actual point of connection within a connector, or on a punch block.

5) Cold solder joints.

6) Flux joints.

7) Solder splatter.

8) Ungrommeted, unbushed, or uninsulated wire or cable entries.

9) Deformation or improper radius of wire or cable.

12. Data cabling wiring practice (For copper cabling used in circuits of >1.0 Mbps conform to the following, in addition to the general requirements above.)
    a. Limit cable bends to a minimum radius of eight (8) times cable diameter except where otherwise noted herein.
    b. At junction boxes, form circular radius bends of eight times cable diameter minimum. Up to two (2) flat bends of 90° or less are permitted in any single cable run where necessary to accommodate field wiring conditions. Flat bends exceeding 90° will not be accepted.
    c. At the receptacle, a single bend of 90° or less and a 1 inch radius shall be permitted subject to the cable manufacturer certification of such an installation meeting Category 5E requirements. Contractor to field verify the performance of the proposed installation in a mockup using the proposed cabling, jacks, raceway and listed test equipment prior to proceeding.
    d. Tie wraps to be hand (not tool) tightened.
    e. Total run not to exceed 92 meters (300 feet). If condition exists report exceeded requirements to Engineer.
13. Labeling
    a. Provide permanent identification of run destination at all raceway terminations. Identify at each manhole, vault, handhole, terminal cabinet, pull box, equipment rack and receptacle/outlet.
    b. Unless otherwise noted, conform to the standards and methods of EIA/TIA 606.
    c. Identify all wire and cable clearly with permanent labels rapped about the full circumference within one (1) inch of each connection. Provide any of the following:
        1) Continuous permanent imprint; equivalent to Clifford of Vermont, Inc. “Quick-Pull”.
        2) Direct hot stamp.
        3) Heat shrinkable factory hot stamped; equivalent to Bradysleeve Heatshrink.
        4) Adhesive strip printed labels wrapped the full circumference of the wire and sealed with clear heat shrink tubing; equivalent to Thomas Betts or Panduit Insta-code with clear heat-shrunk tubing equivalent to Alpha.
        5) Outside Plant, in Manholes or Pull Boxes. Panduit Fiber Optic Cable Marker Tags (Type PST-FO) or Lead tags, 2” square, drilled for cable attachment. Use cable ties or THWN #12 or 2 #14 wrapped twice around the cable bundle and secure to tag using a crimp fastener.
    d. Indicate:
        1) Indicate the number designated on the associated field or shop drawing or run sheet, as applies. Assign wire or cable designations consistently throughout a given system. Each wire or cable shall carry the same labeled designation over its entire run, regardless of intermediate terminations.
        2) Indicate installation date.
    e. Terminal cabinet, pull box and manhole, handhole, vault or similar locations subject to abuse, label in accordance to Section 26 05 00.
        1) Patching Bays and Jacks and Receptacles containing six or fewer jacks/outlets: Provide designation strip holders with clear plastic covers to retain replaceable designation strips. Provide designation strips with block lettering on permanent background in contrasting color. Use photographic print, laser print on acid free paper, plotting ink on Mylar, or equivalent non-fading process. Alternatively, provide black on white adhesive labels equivalent to those produced by Brother brand P-Touch Letter Machine. Embossed plastic (Dymo) labels shall not be acceptable. The presence of manufacturer provided

silk screen iconic identification labels shall not relieve the contractor from the requirement to identify the receptacle with its associated cabling and circuit.

14. Signal grounding procedures

    a. Where items specified in Section 28 05 26 conflict with the requirements of this Section, the most stringent requirement shall govern.

    b. Equipment enclosures shall not be permitted to touch each other unless bolted together and electrically bonded.

    c. Ground and bond equipment racks and similar equipment enclosures containing powered equipment exclusively to a telecommunication grounding bus bar.

    d. At each rack, provide a lug bonded to the rack frame with a #10 Cu THWN stranded wire to the rack isolated ground bus.

    e. Equipment signal ground shall be to racks isolated ground bus via the green wire of the equipment power cord. Where equipment uses an ungrounded power cord, provide #12 green bond wire to rack isolated ground bus bar. At equipment housing, provide crimp lug and suitable hardware for bonding.

    f. Shielded cables of this section shall be grounded exclusively to a telecommunication grounding bus bar by a single path. Shield shall be tied to ground bar at one end only, i.e., at the low potential (receiving) end of run, unless otherwise noted.

3.3 FIELD QUALITY CONTROL

A. General

1. Test and report on each intermediate cabling segment separately, including station cabling, horizontal distribution (each segment, if multiple) and telecommunications closet wiring.

2. Test each end to end cable link.

3. Submit copy of final results on paper and in machine readable form, organized by circuit number, consistent with circuit numbering scheme used in preparing submittal drawings and in labeling receptacles and terminations.

    a. Submit machine-generated documentation and raw data of all test results on Contractor-provided, Owner approved forms; and in electronic format approved by the Owner.

    b. Where the machine-generated documentation requires use of a proprietary computer program to view the data, provide the Owner with 1 licensed copy of the software.

    c. Provide registered testing software used for the actual tests to the Owner/Engineer for review of test data as may be required.

B. Station Wiring, General

1. Test station wire only after all pairs of station wire in a work area have been terminated at both ends, and no work of this Section or other Sections may cause physical disturbance to the wiring.

2. Correct any and all transpositions found, and retest.

3. If any conductor in a station wire tests either open or short, then the entire station wire is to be removed, replaced and retested.

C. Inside Cabling

1. Using a listed Category 6 cable test set, test and submit report on the parameters specified. Report whether tested link passes or fails the Category 5E standards outline within EIA/TIA-568.

2. Note exceptions to required Category standards. Remedy and retest.

D. Telephone: Outside Plant, Inside Riser Wire, Voice Station Wire (where not Category rated):

1. General
   a. A new cable shall be tested only after all wires within the cable have been terminated at both ends.
   b. For unshielded cable, “measurements to ground” means an electrical connection to the Telecommunications Ground Bus, building steel, electrical metallic conduit or a water pipe.
   c. The Contractor shall correct all defects possible.
   d. If the maximum number of un-repairable defective pairs exceeds 4% of the cable’s pair count, the cable shall be deemed unacceptable and shall be replaced. Replace, re-terminate and retest new cable at no additional cost to the Owner.
2. Test procedures
   a. Test #1 – Continuity:
      1) Meter set for 20Ω full scale ohm reading. Each pair shall be shorted at one end and the loop resistance value read at the other.
      2) The difference between the largest and the smallest resistance reading from each pair in the cable shall be no more than 10 percent of the largest reading.
   b. Test #2 – Balance, Polarity and Conductor Transpositions:
      1) Upon passing Test #1, the tester at one end of cable shall ground tip side of each pair in turn. The tester at other end of cable reads resistance to building ground of same conductor.
      2) Reading for each tip conductor in pair of approximately on-half of loop resistance value from Test #1.
3. Test Report
   a. Submit Test Report. Documentation shall include loop resistance regarding any opens, shorts, transpositions as well as corrective actions.

END OF SECTION

CONFORMED

SECTION 27 15 23

FIBER OPTIC CABLING AND DEVICES

PART 1 - GENERAL

1.1 SUMMARY

A. Section includes

1. Provide all labor, materials and equipment necessary to complete the installation required for the items specified under this Section, including but not limited to fiber optic based data communication cabling systems which include:

   a. Provide all necessary cabling and termination equipment for a complete cabling system.

   b. Terminate, test and document fiber optic cabling as detailed within the Specifications.

B. Related sections

1. Where items specified in other Division 27 sections conflict with the requirements of this Section, the most stringent requirement shall govern.

   a. 27 11 16 – Data Racks and Enclosures

   b. 27 05 28 – Pathways for Communication System

2. The requirements of this Section apply to all Division 27 work, as applicable.

3. Consult all other sections, determine the extent and character of related work and properly coordinate work specified herein with that specified elsewhere to produce a complete installation.

1.2 REFERENCES

A. Comply with the latest edition of the following applicable specifications and standards except as otherwise shown or specified:

1. ANSI –American National Standards Institute

   a. INCITS 263; Fiber Distributed Data Interface (FDDI) - Token Ring Twisted Pair Physical Layer Medium Dependent (TP-PMD)

   b. ISO/IEC 11801; Information technology - Generic cabling for customer premises

2. CCR –California Code of Regulations, Title 24

   a. Part 3 -California Electrical Code(CEC); NFPA 70 National Electrical Code (NEC) with California amendments

3. CFR –Code of Federal Regulations

   a. Title 7 –Agriculture, Part 1755 – Telecommunications Standards and Specifications for Materials, Equipment and Construction

   b. Title 47 –Telecommunication, Part 68 – Connection of Terminal Equipment to the Telephone Network.

4. TIA/EIA –Telecommunications Industry Association/Electronic Industries Alliance

   a. Fiber Optic Standards

      1) TIA/EIA-455 Series; Fiber Optic Test Procedures including TIA/EIA-455-B; Standard Test Procedure for Fiber Optic Fibers, Cables, Transducers, Sensors, Connecting and Terminating Devices, and other Fiber Optic Components, and All latest FOTPs related to fiber optic cables, connectors and passive devices.

      2) TIA/EIA-4920000-B; Generic Specification for Optical Waveguide Fibers

3) TIA/EIA-492A000-A; Sectional Specification for Class Ia Multimode, Graded-Index Optical Waveguide Fibers
4) TIA/EIA-492AAAA-A; Detail Specification for 62.5µm Core Diameter/125µm Cladding Diameter Class Ia Graded-Index Multimode Optical Fibers
5) TIA/EIA-492AAAB; Detail Specification for 50µm Core Diameter/125µm Cladding Diameter Class Ia Graded-Index Multimode Optical Fibers
6) TIA/EIA-598-A; Optical Fiber Cable Color Coding
7) TIA/EIA-604; Fiber Optic Connector Intermateability Standards
8) TIA/EIA-4720000-A; Generic Specification for Fiber Optic Cable
9) TIA/EIA-472C000-A; Sectional Specification for Fiber Optic Communications Cable for Indoor Use
10) TIA/EIA-472D000-A; Sectional Specification for Fiber Optic Communications Cable for Outside Plant Use
11) TIA/EIA-4750000-C; Generic Specification for Fiber Optic Connectors
12) TIA-5150000; Generic Specification for Optical Fiber and Cable Splices
13) TIA-515B000; Sectional Specification for Splice Closures for Pressurized Aerial, Buried, and Underground Fiber Optic Cables
14) TIA-6090000; Generic Specification for Optical Fiber Splice
15) TIA-609A000; Sectional Specification for Conventional, Permanent, Optical Fiber Splice
16) TSB62; Informative Test Methods (ITMs) for Fiber-Optic Fibers, Cables, Opto-Electronic Sources and Detectors, Sensors, Connecting and Terminating Devices, and Other Fiber-Optic Components

b. Wiring/Cabling Standards

1) TIA/EIA-568-B.1; Commercial Building Telecommunications Cabling Standard - Part 1: General Requirements
2) TIA/EIA-568-B.3; Optical Fiber Cabling Components Standard
3) TIA/EIA-569-A; Commercial Building Standards for Telecommunications Pathways and Spaces
4) TIA/EIA-606; Administration Standard for the Telecommunications Infrastructure of Commercial Buildings

5. ICEA –Insulated Cable Engineers Association
   a. S-83-596; Fiber Optic Premises Distribution Cable
   b. S-87-640; Fiber Optic Outside Plant Communications Cable
6. IEEE –Institute of Electrical and Electronic Engineers
   a. C2; National Electrical Safety Code (NESC)
   b. 802.3; Information Technology -Local and Metropolitan Area Networks
7. NECA –National Electrical Contractors Association
   a. NECA/BICSI 568; Standard for Installing Commercial Building Telecommunications Systems
8. Telcordia Documents
   a. GR-20; Generic Requirements for Optical Fiber and Optical Fiber Cable
   b. GR-409; Generic Requirements for Premises Fiber Optic Cable
   c. GR-1435; Generic Requirements for Multi-Fiber Optical Connectors
   d. GR-2961; Generic Requirements for Multi-Purpose Fiber Optic Cable

9. UL –Underwriters Laboratories, Inc.
    a. 444; Communications Cables
    b. 1651; Standard for Optical Fiber Cable
    c. 1666; Standard Test for Flame Propagation Height of Electrical and Optical-Fiber Cables Installed Vertically in Shafts
    d. 1685; Standard for Vertical-Tray Fire-Propagation and Smoke-Release Test for Electrical and Optical-Fiber Cables
10. U.S. Department of Agriculture, Rural Utilities Service (RUS), formerly Rural Electrification Administration (REA) Standards
    a. PE-90; Totally Filled Fiber Optic Cable
    b. TE&CM Section 644; Design and Construction of Underground Cable

1.3 SYSTEM PERFORMANCE STANRDARDS

A. Fiber optic cabling:
    1. To applicable EIA/TIA standards using a digital cable analyzer and/or OTDR as specified herein.

1.4 SUBMITTALS

A. Submit manufacturer's data for materials specified within this Section in accordance to Section 26 05 00.

1.5 QUALITY ASSURANCE

A. All materials, equipment and parts comprising the materials specified herein shall be new and unused, bearing UL labels where applicable.

B. Installer Qualifications
    1. The work performed under this Section shall be certified by the manufacturer of the equipment and components being furnished and be authorized by the manufacturer to install and convey the product warranty and performance guarantee to the Owner upon completion of Contract.
    2. Installing Contractor must have a minimum of three years previous experience in data communications and/or telecommunication systems installation. All Contractors and/or Vendors supplying all or parts of the work described herein shall supply three project references within the Submittal package at the Engineer's request, which substantiate the Contractor/Vendors' previous experience as noted herein.

C. Testing Equipment
    1. Furnish in conformance with the applicable requirements of this Section.
    2. Test systems using at least one each of the following test measurement devices or approved functional equivalents:
        a. Digital cable analyzer with applicable copper and/or fiber testing standards required within this Section.
        b. Optical power meter and/or optical time domain reflectometer (OTDR) tester with applicable fiber testing standards required within this Section.
        c. Any other items of equipment or materials required to demonstrate conformance with the Contract Documents.

1.6 DELIVERY, STORAGE AND HANDLING

A. Wire shall be in original unbroken package. Obtain approval of Inspector or Engineer before installation of wires.

B. Handle carefully to avoid damage to internal components, enclosure and finish.

C. Store in a clean, dry environment. Maintain factory packaging and, if required, provide an additional cover to protect enclosure in harsh environments.

1.7 WARRANTY

A. Furnish guarantee in accordance with and in form required under Section 26 05 00.

PART 2 -PRODUCTS

2.1 FIBER OPTIC COMMUNICATIONS CABLES

A. General Requirements

1. Cabling construction and use shall comply with CEC/NEC Article 770.
2. Fiber count per cable to comply with minimum counts indicated on the Drawings.
3. All fiber optics shall comply with all applicable EIA and Telcordia standards including but not limited to EIA-455, EIA-492, EIA-598, GR-20 and GR-409.
4. All fibers shall be of grade index type.
5. Each fiber to be attenuation tested by the Manufacturer prior to shipping to indicate conformance of shipped cable to requirements herein. Manufacturer's test to be affixed to shipping reel.
6. Maximum required bend radius at installation and long term application should not exceed manufacturer's recommended values.
7. Minimum safe longitudinal load at installation and long term application should not exceed manufacturer's recommended values.
8. Construction
   a. All diaelectric central and strengthen materials.
   b. Fiberglass epoxy rod/Kevlar strengthening member(s).
   c. Fiber coating to be mechanically strippable, dual layered, UV-cured acrylate applied by the fiber manufacturer.
   d. Outer jacket shall be polyethylene, polyurethane or polyvinylchloride with 0.040" minimum thickness as required by application, listings and CEC/NEC requirements.
   e. Tight Buffer Design
      1) Water blocking attributes per EIA-455.
      2) Optical fiber surrounding by 250µm primary polymer buffer and 900µm strippable PVC secondary buffer.
      3) Individual sub cables supported by being molded into the cable's overall protective jacket ("core locking" design), extruded onto the stranded cable core.
      4) Strippable and sliceable directly to loose tube construction 250µm primary coating cable with no interface loss or optical return in excess of standards specified elsewhere herein.
      5) Aramid yarn filler, precisely uniformly tensioned around fiber.
   f. Loose Tube, Gel Filled Design
      1) Multiple fiber strands per tube which is kink resistant within specified bend radius.
      2) Inorganic, non-hygroscopic, non-nutritive to fungus, electrically non-conductive, homogenous gel which is readily removable with non-toxic solvents.
      3) Inorganic, non-hygroscopic binder fill provided to supplement and support uniform cable construction as required.
      4) Buffer tubes stranded around central support member using "S-Z" process, left hand lay.

5) Binders to be applied with sufficient tension to secure buffer tubes to the central member without crushing buffer tube(s).

6) High tensile strength dielectric yarns helically woven around cable core to provide tensile strength.

7) Zero flow of filling/gel per FOTP-81.

9. Multi-mode Fiber, General Specifications

a. All multi-mode fiber installed shall be 50/125µm unless otherwise requested by Owner.

b. Performance and Optical

1) Application Support Distances Minimums

a) 10Mb/s Ethernet at 850nm/1300nm: 1250m/1250m

b) 100Mb/s Ethernet at 850nm/1300nm: 300m/2000m

c) 1Gb/s Ethernet at 850nm/1300nm: 500m/1000m

d) 10Gb/s Ethernet at 850nm/1300nm: 300m/300m

2) Attenuation

a) 850nm wavelength: ≤ 3.0dB/km

b) 1300nm wavelength: ≤ 1.0dB/km

c) No point discontinuity > 0.2dB.

d) Attenuation at 1380nm does not exceed attenuation at 1300nm by more than 3.0dB/km.

e) Induced attenuation from 100 turns around a 75mm mandrel shall be ≤ 0.5dB at 850nm and 1300 nm.

3) Chromatic Dispersion

a) Minimum Zero Dispersion Wavelength: 1300nm

b) Maximum Zero Dispersion Wavelength: 1320nm

c) Zero Dispersion Slope: ≤ 0.101ps/nm^2-km

4) Effective Modal Bandwidth Minimums

a) Laser based systems (≤ 1Gb/s) per EIA-455-204 at 850nm: 510MHz-km

b) Legacy and LED based systems (≤ 100Mb/s) per EIA-492:

1) at 850nm: 500MHz-km

2) at 1300nm: 500MHz-km

5) Numerical Aperture: 0.200 ± 0.0015

c. Environmental

1) Temperature induced attenuation at 850nm and 1300nm from -60°C to 85°C: ≤ 0.20dB/km

2) Humidity induced attenuation at 850nm and 1300nm from -10°C to 85°C and 4% to 98% relative humidity: ≤ 0.20dB/km

3) Fatigue Resistance Parameter (N_p): ≥ 18

d. Construction

1) Cladding Diameter: 125 ± 2.0µm

2) Coating/Cladding Offset: < 12µm

3) Coating Diameter: 245 ± 5µm

4) Core/Cladding Offset: ≤ 1.5µm
5) Core Diameter: 50 ± 3.0µm
6) Non-Circularity Core: ≤ 5%
7) Non-Circularity Cladding: ≤ 1.0%
8) Tensile Proof Test: 100kpsi (0.7GPa)

10. Single-mode Fiber, General Specifications
    a. Performance and Optical
        1) Maximum Attenuation
            a) 1310nm Wavelength: 0.40dB/km
            b) 1550nm Wavelength: 0.30dB/km
        2) Chromatic Dispersion
            a) Zero Dispersion Wavelength: 1317nm
            b) Zero Dispersion Slope: ≤ 0.088 ps/nm^2-km
        3) Mode-Field Diameter
            a) 1310nm Wavelength: 9.4 ± 0.4µm
            b) 1550nm Wavelength: 10.6 ± 0.5µm
        4) Numerical Aperture: 0.14
        5) Point discontinuity at 1310nm and 1550nm ≤ 0.05dB.
    b. Environmental
        1) Temperature induced attenuation at 1310nm, 1550nm and 1625nm from -60°C to 85°C: ≤ 0.05dB/km
        2) Humidity induced attenuation at 1310nm, 1550nm and 1625nm from -10°C to 85°C and 4% to 98% relative humidity: ≤ 0.05dB/km
        3) Fatigue Resistance Parameter (N_p): ≥ 18
    c. Construction
        1) Cladding Diameter: 125 ± 0.7µm
        2) Coating/Cladding Offset: < 12µm
        3) Coating Diameter: 245 ± 5µm
        4) Core/Cladding Offset: ≤ 0.5µm
        5) Core Diameter: 8.2µm
        6) Fiber Curl: ≥ 4.0m radius of curvature
        7) Non-Circularity Cladding: ≤ 0.7%
        8) Tensile Proof Test: 100kpsi (0.7GPa)

B. Indoor, Inside Distribution/Breakout Cable, (Type OFNP)
    1. Drawing Reference
        a. Multi-mode: ## FOM-IDW, where ## indicates fiber count
        b. Single-mode: ## FOS-IDW, where ## indicates fiber count
    2. Construction
        a. Multi-mode or single-mode fibers as indicated in Drawings per General Requirements listed above.

b. Breakout style construction per General Requirements listed above with rip cord for outer sheath removal.

c. Suitable and approved for indoor use within plenum spaces.

3. Manufacturer

a. Multi-mode: Mohawk RiserLite with AdvanceLite Grade 4, Superior Essex TeraGain or approved equal.

b. Single-mode: Mohawk RiserLite with AdvanceLite Grade SM1, Superior Essex Singlemode or approved equal.

C. Indoor, Riser (Type OFNR/OFNP)

1. Drawing Reference

a. Multi-mode: ## FOM-R, where ## indicates fiber count

b. Single-mode: ## FOS-R, where ## indicates fiber count

2. Construction

a. Multi-mode or single-mode fibers as indicated in Drawings per General Requirements listed above.

b. Tight buffered, core lock construction per General Requirements listed above.

c. Suitable and approved for indoor use within vertical shafts spaces.

3. Manufacturer

a. Multi-mode: Mohawk RiserLite with AdvanceLite Grade 4, Superior Essex TeraGain or approved equal.

b. Single-mode: Mohawk RiserLite with AdvanceLite Grade SM1, Superior Essex Singlemode or approved equal.

D. Outdoor, underground (Type OFNR)

1. Drawing Reference

a. Multi-mode: ## FOM-OSP, where ## indicates fiber count

b. Single-mode: ## FOS-OSP, where ## indicates fiber count

2. Construction

a. Multi-mode or single-mode fibers as indicated in Drawings per General Requirements listed above.

b. Tight buffered or loose tube, gel filled design per General Requirements listed above.

c. Zero water entry per FOTP-82, 24 hours immersion.

d. Flooding compound and general cable construction shall be listed, suitable for underground and wet applications.

3. Manufacturer

a. Multi-mode: Mohawk RiserLite with AdvanceLite Grade 4, Superior Essex TeraGain or approved equal.

b. Single-mode: Mohawk RiserLite with AdvanceLite Grade SM1, Superior Essex Singlemode or approved equal.

2.2 FIBER CABLE TERMINATION DEVICES AND RELATED

A. Connectors

1. Types

a. Multi-mode: SC type unless otherwise noted, shown or required.

b. Single-mode: LC type unless otherwise noted, shown or required.

2. Zirconia ceramic ferrule type to suit application.
3. Performance
   a. Insertion Loss
      1) Multi-mode: ≤ 0.20 dB, typical
      2) Single-mode: ≤ 0.20 dB, typical
   b. Return Loss
      1) Multi-mode: ≤ -30 dB, typical
      2) Single-mode: ≤ -55 dB, typical
4. Manufacturers
   a. Siemons, 3M or approved equal.

B. Break-out and Fan-out Kits
1. Kits separate six or twelve 250 µm fibers and route them into color-coded 900 µm buffer tubes.
2. Manufacturers
   a. Leviton, Corning Cable Systems or approved equal.

C. Splices
1. Mechanical Splices
   a. Permanent application, integral matching index gel.
   b. Self-centering fiber alignment mechanism.
   c. Performance
      1) Insertion loss, typical:
         a) Multi-mode: ≤ 0.30 dB
         b) Single-mode: ≤ 0.15 dB
      2) Manufacturer's guaranteed rating worst insertion loss for splice ≤ 0.5 dB.
      3) Return Loss
         a) Flat cleave: ≤ -45 dB
         b) Angled cleave: ≤ -60 dB
      4) Minimum fiber strain relief: 0.75 lbs
   d. Manufacturers
      1) Corning Optical System Camsplice, 3M Fibrlok or approved equal.
2. Fusion Splices
   a. Computerized optical aligner and tester with integral fuser.
   b. Splice protected with a heat shrink cover.
   c. Insertion loss, typical:
      1) Multi-mode: ≤ 0.30 dB, typical
      2) Single-mode: ≤ 0.20 dB, typical
      3) Manufacturer's guaranteed rating worst case for multi-mode or single-mode splice is ≤ 0.5 dB.
   d. Manufacturers

1) Corner Cable System or equal.

2.3 FIBER OPTIC TERMINATION EQUIPMENT AND RELATED

A. Fiber Terminal Cabinet, Wall Mount, Patch Panel/Splice Tray

1. Drawing Reference:
   a. ##FTB: Fiber Terminal Box – Patch and cable storage only, where ## refers to fiber port count.
   b. ##FSB: Fiber Splice Box – Splice only, where ## refers to fiber strand count.
2. Fiber Optic Terminal Cabinet
   a. Provides a location for patching portable and rack mounted equipment to permanently installed fiber infrastructure.
   b. Constructed of 0.125 inch minimum thick aluminum or powder coated steel with hinged, lockable door.
   c. Holds a minimum of 4 fiber adapter plates that can each accommodate 6 to 12 single SC, ST or LC termination ports. Install blank adapters as required to fill spaces.
   d. Two compartment
      1) Interior fiber coil rings/splice compartment.
      2) Connector interface compartment.
3. Manufacturers
   a. Leviton 5Wx30, Siemon SWIC3G or approved equal.

B. Fiber Distribution Panels, Splice and Patch

1. Drawing References:
   a. ##FDP – Splice and Patch Panel, where ## refers to fiber port count.
   b. ##FPP – Patch Panel Only, where ## refers to fiber port count.
   c. ##FSP – Splice only, where ## refers to fiber port count.
2. Features/Functions/Performance
   a. Provides a location for splice, maintenance and cross-connecting of fiber optic cables.
   b. 19” EIA rack mount with polycarbonate locking door suitable for housing fiber optic splices in a neat and orderly fashion and/or contain a patch panel front.
   c. Incorporates cable tie downs and routing rings, and should store a minimum of one meter of cable without kinks or twists.
   d. Suitable for re-entry, if required for future maintenance or modification without damage to the cable or splices.
   e. All required splice organizer hardware, such as splice trays, protective glass shelves, and shield bond connectors shall be provided in the organizer kit.
   f. Holds fiber adapter plates that can each accommodate SC, ST or LC termination ports. Install blank adapters as required to fill spaces. The minimum number of fiber terminations per rack unit is as follows:
      1) 1 rack unit = 16 fibers
      2) 2 rack units = 48 fibers
      3) 3 rack units = 96 fibers
      4) 4 rack units = 144 fibers
      5) 6 rack units = 192 fibers

3. Manufacturers
    a. Leviton 5Rx60 series, Siemon RIC3 series or approved equal.

C. Fiber Splice Closure
1. Drawing Reference: FSC
2. Functions/Features
    a. Where indicated on plans, provides re-enterable underground splice closure.
    b. Plastic construction – no corrodible materials.
    c. Waterproof, suitable for direct burial
    d. Fusion splice protection chamber
    e. Grommet cable entrance and exits.
3. Manufacturers
    a. Corning Cable Systems SCF, 3M Fiber Optic Closure System LL or approved equal.

PART 3 -EXECUTION

3.1 EXAMINATION

A. Verify that all raceways have been de-burred and properly joined, coupled, and terminated prior to installation of cables. Verify that all raceways are clear of foreign matter and substances prior to installation of wire or cable.

B. Inspect all conduit bends to verify proper radius. Comply with Code and cable manufacturer requirements for minimum permissible radius and maximum permissible deformation.

3.2 INSTALLATION

A. All necessary interconnections, services, and adjustments required for a complete and operable system shall be provided. All installation work must be done in accordance with the safety requirements set forth in the general requirements of IEEE C2 and CEC/NEC 770.

B. Fiber Installation:
1. All fiber optic cable shall be continuous and splice-free for the entire length of run between designated connections or terminations.
2. At designated splices, maintain conductor color code across all splices.
3. Within buildings, make splices only in designated terminal cabinets and/or on designated equipment backboards.
4. Outdoor splices shall not be permitted except where specifically noted or where required by the run length. Where run lengths require outdoor splices not noted on the drawings, notify Engineer in writing for direction before proceeding.
5. Do not subject cable to tension greater than that recommended by the cable manufacturer. Use multi-spool rollers where cable is pulled in place around bends. Do not pull reverse bends.
6. Provide a box loop for all cable routed through junction boxes or distribution panels. Provide tool formed thermal expansion loops at cable at manholes, handholes and at both sides of all fixed mounted equipment. Cable loops and bends shall not be bent at a radius greater than that recommended by the manufacturer.
7. Secure all cable run vertically for continuous distances greater than thirty (30) feet with symmetrical conforming nonmetallic bushings or woven cable grips appropriate to weight of cable.
8. Where drawings specifically permit use of exposed cable installation in Plenum and/or Suspended Ceiling voids, conform to the following:

a. Support: Provide support for all cabling. Do not place or attach directly to T-bar grid, concealed spline grid, flexible or rigid ductwork, HVAC registers, sprinkler piping or fixtures, light fixtures.

1) Provide supports at least 48” on center, with cables installed with slight sag to ensure conformance with EIA TSB40 tensioning and stress limits.

b. Placement: Do not obscure access to access doors, hatches, air dampers, valves, cable trays, junction boxes, pull boxes or similar areas of access.

c. Place EMT pipe sleeves at all wall penetrations. Fire stop sleeves and cables where penetrating a rated wall with an approved UL assembly.

9. Wiring practices

a. Land all non-coaxial field wiring entering each equipment rack at specified terminal devices prior to connection to any equipment or devices within racks. At Contractor’s option and at no additional costs to Owner, such terminals may be located in the equipment racks or in the terminal cabinets provided.

b. Apply all crimp connectors only with manufacturer’s recommended ratchet type tooling and correct crimp dies for connector and wire size; pliers type crimp tooling shall not be acceptable.

c. Coordinate insulation displacement (quick connect) terminal devices with fiber size and type. Comply with manufacturer’s recommendations, and make connections with automatic impact type tooling set to a recommended force.

d. Dress, lace or harness all wire and cable to prevent mechanical stress on electrical connections. No wire or cable shall be supported by a connection point. Provide service loops where harness of different classes cross or where hinged panels are to be interconnected.

e. Correct any and all of the following unacceptable wiring conditions:

1) Deformed, brittle or cracked insulation.

2) Torn or worn cable jacket.

3) Excessively scored cable jackets

4) Insulation shrunken or stripped further than 1/8” away from the actual point of connection within a connector, or on a punch block.

5) Ungrommeted, unbushed, or uninsulated wire or cable entries.

6) Deformation or improper radius of wire or cable.

f. Limit cable bends to a minimum radius of eight (8) times cable diameter except where otherwise noted herein.

g. At junction boxes, form circular radius bends of eight times cable diameter minimum. Up to two (2) flat bends of 90° or less are permitted in any single cable run where necessary to accommodate field wiring conditions. Flat bends exceeding 90° will not be accepted.

h. At the receptacle, a single bend of 90° or less and a 1 inch radius shall be permitted subject to the cable manufacturer certification of such an installation. Contractor to field verify the performance of the proposed installation in a mockup using the proposed cabling, jacks, raceway and listed test equipment prior to proceeding.

i. Tie wraps to be hand (not tool) tightened.

10. Labeling

a. Provide permanent identification of run destination at all raceway terminations. Identify at each manhole, vault, handhole, terminal cabinet, pull box, equipment rack and receptacle/outlet.

b. Unless otherwise noted, conform to the standards and methods of EIA/TIA 606.

c. Identify all wire and cable clearly with permanent labels rapped about the full circumference within one (1) inch of each connection. Provide any of the following:

1) Continuous permanent imprint; equivalent to Clifford of Vermont, Inc. “Quick-Pull”.

2) Direct hot stamp.

3) Heat shrinkable factory hot stamped; equivalent to Bradysleeve heat shrink.

4) Adhesive strip printed labels wrapped the full circumference of the wire and sealed with clear heat shrink tubing; equivalent to Thomas Betts or Panduit Insta-code with clear heat-shrunk tubing equivalent to Alpha.

5) Outside Plant, in Manholes or Pull Boxes. Panduit Fiber Optic Cable Marker Tags (Type PST-FO) or Lead tags, 2” square, drilled for cable attachment. Use cable ties or THWN #12 or 2 #14 wrapped twice around the cable bundle and secure to tag using a crimp fastener.

d. Indicate:

1) Indicate the number designated on the associated field or shop drawing or run sheet, as applies. Assign wire or cable designations consistently throughout a given system. Each wire or cable shall carry the same labeled designation over its entire run, regardless of intermediate terminations.

2) Indicate installation date.

e. Terminal cabinet, pull box and manhole, handhole, vault or similar locations subject to abuse, label in accordance to Section 16050.

1) Patching Bays and Jacks and Receptacles containing six or fewer jacks/outlets: Provide designation strip holders with clear plastic covers to retain replaceable designation strips. Provide designation strips with block lettering on permanent background in contrasting color. Use photographic print, laser print on acid free paper, plotting ink on Mylar, or equivalent non-fading process. Alternatively, provide black on white adhesive labels equivalent to those produced by Brother Brand P-Touch Letter Machine. Embossed plastic (Dymo) labels shall not be acceptable. The presence of manufacturer provided silk screen iconic identification labels shall not relieve the contractor from the requirement to identify the receptacle with its associated cabling and circuit.

3.3 FIELD QUALITY CONTROL

A. General

1. Test and report on each intermediate cabling segment separately, including station cabling, horizontal distribution (each segment, if multiple) and telecommunications closet wiring.

2. Test each end to end cable link.

3. Submit copy of final results on paper and in machine readable form, organized by circuit number, consistent with circuit numbering scheme used in preparing submittal drawings and in labeling receptacles and terminations.

a. Submit machine-generated documentation and raw data of all test results on Contractor-provided, Owner approved forms; and in electronic format approved by the Owner.

b. Where the machine-generated documentation requires use of a proprietary computer program to view the data, provide the Owner with 1 licensed copy of the software.

c. Provide registered testing software used for the actual tests to the Owner/Engineer for review of test data as may be required.

B. Fiber Optic Cabling

1. Perform fiber optic cable testing on all installed fiber optic cabling. Notify Owner or Engineer in writing at least 48 hours in advance that fiber optic cable testing shall commence. Submit test results and calibration certification for testing equipment to be used.

2. Submit test report no later than five days after the cables are tested.

3. Attenuation Assessments

    a. Submit power meter attenuation assessments test results on each fiber strand, in each cable, and in both directions under final installation conditions. Submit with the following information:

        1) Date of test
        2) Name of test personnel
        3) Fiber cable type and part number
        4) Fiber number
        5) TX wavelength
        6) TX location
        7) RX location
        8) TX model and serial number
        9) RX model and serial number
        10) Attenuation in dB

4. OTDR Distance and Attenuation Assessments (Contractor to provide only as required for troubleshooting or locating faults on the fiber).

    a. Test and submit strip charts and/or tracer recordings on all strands in each cable in both directions. Submit with the following information:

        1) Date of test
        2) Name of test personnel
        3) Test wavelength
        4) Pulse duration(s) and scale range(s)
        5) Index of refraction
        6) Fiber cable type and part number
        7) Fiber tube and/or fiber strand number
        8) Direction of test
        9) Overall distance
        10) Attenuation in dB

5. Acceptance Tests

    a. Power Meter Attenuation Test

        1) Perform the following measurement attenuation tests using the insertion method. Measure the attenuation of the fiber optic network inclusive of all splices and patch points called for on the Drawings.

        2) Measure attenuation between all the couplings using the insertion method.

            1) Perform a reference measurement in dBm to determine the injection power level of the stabilized source. Reference cable shall have the same core diameter as strands under test. Connect the optical source directly to the optical power level meter using 2 reference cables and a coupler.

            2) Connect the optical source to the strand under test using 1 of the 2 reference cables attached to the strand's terminal coupler.

            3) Connect the optical power level meter to the other end of the strand under test through its terminating coupler using the other reference cable.

            4) Obtain the measured attenuation (in dB) by subtracting the reference level (dBm) from the received level (dBm).

5) Periodically during the acceptance tests, check and document the reference level.

3) Test each fiber link for overall attenuation from end to end in both directions.

b. Perform the attenuation acceptance test at the 850nm wavelength for multi-mode and 1310nm for single-mode

END OF SECTION

CONFORMED

SECTION 27 15 33

VIDEO DISTRIBUTION

PART 1 - GENERAL

1.1 SUMMARY

A. Section includes

1. Provide all labor, materials and equipment necessary to complete the installation required for the items specified under this Section, including but not limited to video distribution cabling and equipment.

B. Related sections

1. Where items specified in other Division 27 sections conflict with the requirements of this Section, the most stringent requirement shall govern.
    a. 27 05 26 – Grounding and Bonding for Communications
    b. 27 11 16 – Data Racks and Enclosures
    c. 27 05 28 – Pathways for Communication System
    d. 27 15 23 – Fiber Optic Telecommunications/Data Cabling and Devices
2. The requirements of this Section apply to all Division 27 work, as applicable.
3. Consult all other sections, determine the extent and character of related work and properly coordinate work specified herein with that specified elsewhere to produce a complete installation.

1.2 REFERENCES

A. Comply with the latest edition of the following applicable specifications and standards except as otherwise shown or specified:

1. CCR –California Code of Regulations, Title 24
    a. Part 3 -California Electrical Code(CEC); NFPA 70 National Electrical Code (NEC) with California amendments
2. CFR –Code of Federal Regulations
    a. Title 47 –Telecommunication, Part 76 –Multichannel Video and Cable Television Service
3. IEEE –Institute of Electrical and Electronic Engineers
    a. C62.41.1; Guide on the Surge Environment in Low-Voltage (1000V and Less) AC Power Circuits
4. NCTA –National Cable and Telecommunications Association
    a. RP-7; Recommended Practices for Measurements on Cable Television Systems
5. TIA –Telecommunications Industry Association
    a. 250-C; Electrical Performance for Television Transmission Systems

1.3 SYSTEM DESCRIPTION

A. Community/Media access television distribution system with signal input from local CATV company or local origination signals from camera or satellite dish. Provide the following system components as described in the Drawings:

1. Head-end: Locate amplifier equipment and related hardware at rack or backboard as shown to process incoming video signal.

2. Distribution: All distribution equipment, related devices and cabling required to receive signal to television locations.

1.4 SYSTEM PERFORMANCE STANDARDS

A. Radiation: Comply with Title 47, Code of Federal regulations and Part 76, Cable Television Rules and Regulations.

B. The system shall provide interference-free distribution of any of the scheduled CATV Utility channels and allow for future distribution of internally generated forward and reverse channels.

C. The TASO Grade of the signal of any channel when viewed on a standard commercial TV receiver at any tap-off outlet shall not be less than the TASO Grade of the same channel viewed on the same receiver when connected directly to the CATV Utility feed.

D. The MATV system design shall provide for CATV compatible adjacent channel operation with bandwidth to at least 750MHz. Bandwidth of amplifiers shall be from 54MHz to 750MHz in the forward direction, unless otherwise noted.

E. The MATV system passive elements shall permit upstream (reverse channel) transmission of 5MHz to 42MHz sub-low band VHF television channels from any outlet (tap-off) to the head-end.

F. The system shall provide output levels of:

1. +6 to+12dBmV from 54 to 400MHz nominal, not greater than +15dBmV at any tap-off.

2. +3dBmV above 400MHz

G. The signal level from any channel to any adjacent channel shall not vary more than 2dB at the tap-off output.

H. Long Term Variations in Amplitude: Not to exceed 3dB.

I. Amplitude Response within any TV Channel: Not to exceed +1.0dB.

J. Amplitude Response for Entire Spectrum Sector: Not to exceed ±2dB.

K. Visual Carrier to noise Ratio: Not less than 50dB.

L. Composite Triple Beat Ratio: Not less than 55dB.

M. Cross Modulation ratio: Not less than 57dB.

N. Visual Carrier to Hum Modulation Ratio: Not less than 63dB.

O. Visual Carrier to Reflections Ratio: Not less than 46dB.

P. In the event that a specific device not meeting the above performance parameters is shown in the Contract Documents as included in the signal chain, the manufacturer's performance specifications of that device shall prevail, with the exception of Radiation, which will not be waived.

1.5 SUBMITTALS

A. Submit manufacturer's data for materials specified within this Section in accordance to Section 26 05 00.

1.6 QUALITY ASSURANCE

A. All materials, equipment and parts comprising the materials specified herein shall be new and unused, bearing UL labels where applicable.

B. Installer Qualifications

1. The work performed under this Section shall be certified by the manufacturer of the equipment and components being furnished and be authorized by the manufacturer to install and convey the product warranty and performance guarantee to the Owner upon completion of Contract.

2. Installing Contractor must have a minimum of three years previous experience in video distribution systems installation. All Contractors and/or Vendors supplying all or parts of the work

described herein shall supply three project references within the Submittal package at the Engineer's request, which substantiate the Contractor/Vendors' previous experience as noted herein.

C. Testing Equipment

1. Furnish in conformance with the applicable requirements of this Section.
2. Test system using the following test measurement devices or approved functional equivalents:
   a. Wide Band Oscilloscope
   b. Sync/Test Generator
   c. RF generator, 5-750MHz
   d. Field Strength Meter, 5-750MHz
   e. Spectrum Analyzer, 5-750MHz
   f. Time-Domain Reflectometer
   g. Precision Demodulator
   h. True RMS Audio Digital Volt-Ohm-Millimeter.
   i. Any other items of equipment or materials demonstrating conformance with the Contract Documents.

1.7 DELIVERY, STORAGE AND HANDLING

A. Wire shall be in original unbroken package. Obtain approval of Inspector or Engineer before installation of wires.

B. Handle carefully to avoid damage to internal components, enclosure and finish.

C. Store equipment in a clean, dry environment. Maintain factory packaging and, if required, provide an additional cover to protect enclosure in harsh environments.

1.8 WARRANTY

A. Furnish guarantee in accordance with and in form required under Section 26 05 00.

PART 2 -PRODUCTS

2.1 CATV FIBER OPTIC VIDEO DISTRIBUTION EQUIPMENT

A. Fiber Optic Transmitter

1. Drawing Reference: FOT
2. Equipment: Blonder-Tongue FIBT-S3A series or approved equal.
3. Performance
   a. Operating Wavelength: 1310 nm
   b. Input Return Loss $\geq$16 dB @ 75Ω
   c. Back Reflection: -50 dB minimum
   d. Optical Output Power: +6 dBm to +14dBm
   e. Bandwidth: 45 to 860 Mhz
   f. RF Input Level (110 Ch. Load): +18dBmV/Ch.
   g. CNR (-1 dBm Input, 77 Ch. Load + QAM 550-860 MHz @ -6dB Ref. Analog): ≥52 dB
   h. CTB: ≥ 69 dB
   i. CSO: ≥ -63 dB

j. Side Mode Suppression Ratio (SMSR): 30 dB

4. Connectors
   a. RF Input: 75 Ω, type ‘F’
   b. Optical Output: Single mode fiber optic, ‘FC/APC’
5. EIA 19” rack mountable

B. Fiber Optic Receiver and Distribution Amplifier, 860 MHz
1. Drawing Reference: FORDA
2. Equipment: Blonder-Tongue FRRA-S4A-860-43PA or approved equal.
3. Power doubling hybrid type amplifier
4. Performance:
   a. Bandwidth: 45 to 860 MHz
   b. Bandpass Flatness: 1 dB P/V
   c. Operating Wavelength: 1310/1550 nm
   d. Optical Input Range: -6 to +3.0 dBm
   e. Input Impedance: 75 Ohm
   f. CNR (-1 dBm Input, 40 Ch. Load): 56 dB
   g. CNR (-1 dBm Input, 79 Ch. Load): 55 dB
   h. CNR (-1 dBm Input, 110 Ch. Load): 54 dB
   i. Return Loss Input and Output: 16 dB
   j. RF Gain: 43 dB
   k. Gain Control Range: 10 dBm
   l. Slope Control Range: 8 dBm
   m. Channel Loading: 110
   n. Flatness: ±0.75 dB
   o. Output Level: 34/42 dBmV
   p. Composite Triple Beat (CTB): -60 dB
   q. Composite Second Order (CSO): -58 dB
   r. Hum Modulation: -70 dB
5. Connectors
   a. RF Output: 75 Ω, type ‘F’
   b. Optical Input: Single mode fiber optic, ‘FC/APC’
6. EIA 19” rack mountable

C. Fiber Optic Coupler
1. Drawing Reference: FOC1X, where X denotes number of optical outputs.
2. Equipment: Blonder-Tongue FOC-23 or approved equal.
3. Performance:
   a. Operating Wavelength: 1310/1550 nm
   b. Insertion Loss: < 11.0 dB
   c. Uniformity: < 2.0 dB

d. Directivity: ≥ 50 dB

4. Connectors
   a. Input: (1) one single mode fiber optic, 'FC/APC'
   b. Output: single mode fiber optic, 'FC/APC' ports as specified
5. EIA 19" rack mountable

2.2 CATV DISTRIBUTION

A. Broadband Indoor Bi-directional Distribution Amplifier, 750MHz.
1. Drawing Reference: BBIDAB750
2. Equipment: Blonder-Tongue BIDA75A-43P or approved equal.
3. Power doubling hybrid type amplifier with integrated active return path.
4. Performance
   a. Gain Control Range (forward/reverse): 10 dB/18 dB
   b. Slope Control Range (forward/reverse): 8 dB/ NA
   c. Hum Modulation (forward/reverse): -70 dB/-65 dB
   d. Return Loss Input and Output (forward/reverse): 16 dB (all)
   e. Frequency Range (forward/reverse): 49 to 750 MHz / 5 to 36 MHz
   f. Channel Loading (forward/reverse): 110 / 3
   g. Flatness (forward/reverse): ±0.7 dB /±0.5 dB
   h. Gain (forward/reverse): 43 dB /20 dB
   i. Noise Figure (forward/reverse): 8.5 dB / 6 dB
   j. Output Level (forward/reverse): +44 dBmV / +42 dBmV
   k. Composite Triple Beat (CTB) (forward/reverse): -58 dB / -60 dB
   l. Cross Modulation (XMOD) (forward/reverse): -62dB / -60 dB
   m. Composite Second Order (CSO) (forward/reverse): -58 dB / -60 dB
5. RF Input and Output Connectors: 75 Ω, type 'F'

2.3 CATV PASSIVES

A. General
1. Bandwidth: 5 MHz to 1 GHz
2. RFI Shielding: ≥ 100 dB

B. Indoor Splitters (2, 3, 4, 6, and 8 way)
1. Drawing Reference: SP#, where # indicates number of outputs required,
2. Equipment: Blonder-Tongue SXRS and SCVS Series, Regal Gold/Red Series, or approved equal with equivalent insertion loss, return loss, and isolation performance characteristics.
3. Integral ground block
4. RF Input and Output Connectors: 75 Ω, type 'F'

C. Multi-tap Directional Couplers (2, 4, and 8 taps outputs with 8, 11, 14, 17, 20, 23, 26, and 29 dB tap values)
1. Drawing Reference: MTC[#1]-[#2], where [#1] indicates number of outputs required and [#2] indicates tap value in decibels.

2. Equipment: Blonder-Tongue SRT Series, Regal Gold/Red Series, or approved equal with equivalent insertion loss, return loss (tap-to-tap and out-to-tap), and tap-to-tap isolation performance characteristics.
3. Integral ground block
4. RF Input and Output Connectors: 75 Ω, type 'F'

D. Modular Distribution Housing

1. Drawing Reference: MDH#, where # indicates number of modules within frame.
2. Equipment: Toner Cable Equipment (http://www.tonercable.com) TXMT-3H, 3 module housing frame and TXMT-6H, 6 module housing frame. No known equal.
3. RF Input and Output Connectors: 75 Ω, type 'F'
4. RF by-pass design allowing modules to be removed without loss of service to other modules within housing.
5. Modules
   a. 2-port tap module plate, Toner Cable Equipment TXMT-102 Series
      1) Drawing Reference: -2P#, where # indicates tap value in decibels.
   b. 4-port tap module plate, Toner Cable Equipment TXMT-104 Series
      1) Drawing Reference: -4P#, where # indicates tap value in decibels.
   c. 8-port tap module plate, Toner Cable Equipment TXMT-108 Series
      1) Drawing Reference: -8P#, where # indicates tap value in decibels.
   d. RF attenuator module plate, Toner Cable Equipment TXMT-EQ Series
      1) Drawing Reference: -RF#, where # indicates attenuation value in decibels.
   e. Amplifier plate, Toner Cable Equipment TXMA Series
      1) Drawing Reference: -AMP to denote amplifier.
      2) Performance
         a) Return Loss Input and Output (forward/reverse): 12 dB (all)
         b) Frequency Range (forward/reverse): 54 to 1000 MHz / 5 to 42 MHz
         c) Gain (forward/reverse): 14.5 dB / 10 dB
         d) Noise Figure (forward/reverse): 12 dB (all)
         e) Composite Triple Beat (CTB): -69 dB
         f) Cross Modulation (XMOD): -67 dB
   f. Blank plate, Toner Cable Equipment TXMT-B
      1) Supply as necessary to occupy all unused openings within housing.

E. RF Attenuator

1. Drawing Reference: RFA#, where # indicates attenuation value in decibels.
2. Equipment: Blonder-Tongue FAF Series, Regal RILA Series or approved equal with equivalent attenuation loss and return loss performance characteristics
3. RF Input and Output Connectors: 75 Ω, type 'F'

F. Terminator, 75□ F• type.

1. Equipment: Blonder-Tongue BTF-TP, Gilbert GTR-59-A, Regal RF-59T or approved equal.

G. Grounding Block

1. Drawing Reference: GB.

2. Equipment: Thomas & Betts GB6 Series, Gilbert GGB Series or approved equal.
3. Comply with CEC 820-7.
4. Aluminum alloy body.
5. RF Input and Output Connectors: 75 Ω, type 'F'

H. Station Outlets

1. Standard outlet
   a. Equipment: Blonder-Tongue V1-1GF-FT, TF-GF-FT or approved equal.
   b. RF shielded design.
   c. RF output connector: 75 Ω, type 'F'
2. Modular outlet
   a. Manufacturer shall be of the same system as supplied for telecommunications, multimedia, and data network systems specified elsewhere in this Division.
   b. Construction
      1) Modular, with snap-in receptacle options as scheduled.
      2) Single gang plate size and mounting.
      3) Options for 1 to 6 modular jacks per plate.
      4) Plate face shall be nylon; color shall be compatible with adjacent wall finish, unless otherwise indicated.
      5) Integral labeling provided for plate identifier and identifier for each receptacle on the plate. Provide as follows:
         a) Plate Nominally 1-½" by ½"recessed slot with clear plastic cover over paper label. See labeling requirements in Part 3
         b) Receptacle Identifier(s): Iconic or literal descriptions of each receptacle type.
      6) System shall provide at minimum the following receptacle options:
         a) RJ25 voice jack
         b) RJ45 data jack
         c) 75Ω BNC connector
         d) 75 Ω F connector
         e) RCA type jacks
         f) ST fiber connector
         g) S-Video connector
         h) Blank plate fillers as required

2.4 CATV CONNECTORS AND ADAPTERS:

A. RG-6 Type 'F' Male Connector, size to match braid coverage:
   1. Compression type connector with plastic sleeve.
   2. Thomas & Betts Snap-n-Seal Series, PPC CMP Series or approved equal.

B. RG-6 Right Angle Type 'F' Male Connector,
   1. Use to connect cable to terminal F-connector inside surface raceway and shallow boxes, size to match cable.
   2. Gilbert GF-6-RA series or approved equal.

C. RG-11 Type ‘F’ Male Connector, size to match braid coverage:
   1. Gilbert UltraSeal Series, PPC EX11 Series or approved equal.
D. Hardline Female to ‘F’ Male Adapter, size to match cable.
   1. Gilbert G2 Series, TFC/Amphenol or approved equal.
   2. Hardline Female Cable Splice Adapter, size to match cable.
   3. Gilbert G2 Series, TFC/Amphenol or approved equal.
E. Hardline Cable Terminator, size to match cable.
   1. Gilbert G2 Series, TFC/Amphenol or approved equal.

2.5 CATV MISCELLANEOUS PRODUCTS:

A. Heat Shrinkable Tubing
   1. Features/Performance:
      a. Waterproof seal.
      b. Continuous operating temperature -55°C to 110°C
      c. Shrink temperature: 120°C
      d. 2100psi tensile strength
   2. Provide equivalent to:
      a. Canusa-EMI CFTV or approved equal.

2.6 CATV CABLE

A. Series 6 & 11 Cables (RG-6 and RG-11)
   1. General
      a. Comply with CEC 820, Sections 49, 50, 51 and 53 where applicable.
      b. RG-6 cables be shall 18 gauge copper covered steel center conductor within gas expanded polyethylene dielectric. Additional jacket and shielding requirements are outlined below.
      c. RG-11 cables be shall 14 gauge copper covered steel center conductor within gas expanded polyethylene dielectric. Additional jacket and shielding requirements are outlined below.
      d. Approved equal manufacturers and assemblies shall have no less the electrical and attenuation characteristics than those specified below.
   2. Outdoor, underground
      a. Drawing Reference: RG6FOP and RG11FOP
      b. Construction: Bonded foil, 60% braid, non-bonded tape, 40% braid, flooded for underground, PE jacket.
      c. Manufacturer
         1) Series 6: CommScope F6SSEF, Times Fiber T6Q-FVB or approved equal.
         2) Series 11: CommScope F11SSEF, Times Fiber T11Q-FEB or approved equal.
   3. Indoor, plenum (Type CMP/CATVP)
      a. Drawing Reference: RG6P and RG11P
      b. Construction: Bonded foil, 60% braid, non-bonded tape, 40% braid, flame retardant PVC jacket.
      c. Manufacturer
         1) Series 6: CommScope 2227V, West Penn 25Q841 or approved equal.

2) Series 11: CommScope 2287K, West Penn 25Q821 or approved equal.

4. Indoor, riser (Type CMR/CATVR)
   a. Drawing Reference: RG6R and RG11R
   b. Construction: Bonded foil, 60% braid, non-bonded tape, 40% braid, flame retardant PVC jacket.
   c. Manufacturer
      1) Series 6: CommScope F6SSVR, Times Fiber T6Q-VBR or approved equal.
      2) Series 11: CommScope F6SSVR, Times Fiber T11Q-VBR or approved equal.
5. Indoor, general (Type CMG/CM/CATV)
   a. Drawing Reference: RG6M and RG11M
   b. Construction: Bonded foil, 60% braid, non-bonded tape, 40% braid, flame retardant PVC jacket.
   c. Manufacturer
      1) Series 6: CommScope F6SSVV, Belden 1189A or approved equal.
      2) Series 11: CommScope F11SSVV, Belden 1617A or approved equal.

B. Hardline Cable
1. 500 Series
   a. Drawing Reference: 500FOP
   b. Cable Construction: Solid aluminum tube, foam dielectric core, flooded for underground, PE jacket.
   c. Manufacturer: CommScope P3500JCASS, Times Fiber T10500JB or approved equal with similar electrical and attenuation characteristics.

PART 3 -EXECUTION

3.1 INSTALLATION

A. Provide transition from flooded cable construction to indoor cable at point of entry.
B. Comply with all grounding requirements within CEC/NEC 820 Parts III and IV.
C. Comply with all installation requirements of CEC/NEC 820.52.
D. Where splitters or directional couplers are installed outdoors, provide heat shrinkable tubing on all outdoor connectors, cable splices, adapters and fittings.
E. Place 75□, F termination resistors at all unused system terminal points, including those not attached to televisions or VCR's.

3.2 SIGNAL POLARITY CONVENTION:

A. Maintain consistent absolute signal polarity at all connectors, patch points and connection points accessible in the system.
B. Video and RF/MATV Connector Convention
1. Signal phase through connector's center pin and cable's center conductor.
2. Signal anti-phasing and grounding through connector's shell and cable shield.

3.3 SYSTEMS PERFORMANCE TESTING AND ADJUSTING PROCEDURES:

A. Upon completion of the installation of all equipment in an area, perform the following tests and record results. Verify safe and proper operation of all components, devices, or equipment, establish nominal

signal levels within the systems and verify the absence of extraneous or degrading signals. Make all preliminary adjustments and document the setting of all controls, parameters of all corrective networks, voltages at key system interconnection points, gains and losses, as applicable. Submit test report. Correct all non-conforming conditions prior to requesting Acceptance Review and Testing. Perform at least the following procedures by verification:

1. Mechanical:
    a. Integrity of all support provisions.
    b. Absence of debris of any kind, tools etc.
2. Power and Isolated Ground:
    a. Isolation of isolated ground system from raceway and related ground.
    b. Grounding of devices and equipment. Integrity of signal and technical power system ground connections.
    c. Proper provision of power to devices and equipment.
3. Signal Wiring:
    a. Integrity of all insulation, shield terminations and connections.
    b. Routing and dressing of wire and cable.
    c. Continuity, including conformance with wire designations on running sheets, field and shop drawings.
    d. Absence of ground faults.
    e. Polarity.
4. Use the proper sequence of energizing systems to minimize the risk of damage.
5. MATV System:
    a. At head-end adjust channel processors and modulators to equal level.
    b. Adjust all amplifiers' gains and tilts.
    c. Perform overall system sweep to verify levels.

B. Provide permanent "wedge" type labels on all controls, as applies, to indicate correct settings after systems performance testing and adjustment procedures have been successfully completed

END OF SECTION

CONFORMED

SECTION 28 05 26

GROUNDING AND BONDING FOR ELECTRONIC SAFETY AND SECURITY

PART 1 - GENERAL

1.1 SUMMARY

A. Section includes

1. Provide all labor, materials and equipment necessary to complete the installation required for the item specified under this Section, including but not limited to telecommunication system grounding.

B. Related sections

1. Where items specified in other Division 26 sections conflict with the requirements of this Section, the most stringent requirement shall govern.
2. The requirements of this Section apply to all Division 26 work, as applicable.
3. Consult all other sections, determine the extent and character of related work and properly coordinate work specified herein with that specified elsewhere to produce a complete installation.

1.2 REFERENCES

A. Comply with the latest edition of the following applicable specifications and standards except as otherwise shown or specified:

1. CCR –California Code of Regulations, Title 24
   a. Part 3 -California Electrical Code(CEC); NFPA 70 National Electrical Code (NEC) with California amendments
2. IEEE –Institute of Electrical and Electronic Engineers
   a. 1100; Recommended Practices Powering and Grounding Electronic Equipment
3. NFPA –National Fire Protection Association
   a. 780; Lightning Protection Code
4. TIA/EIA – Telecommunications Industry Association/Electronic Industries Alliance
   a. 607; Commercial Building Grounding and Bonding Requirements for Telecommunications
5. UL -Underwriters Laboratories, Inc.
   a. 467; Grounding and Bonding Equipment

1.3 SYSTEM DESCRIPTION

A. This Section provides for the grounding and bonding of all electrical and communication apparatus, appliances, components, fittings and accessories where required to provide a permanent, continuous, low impedance, grounded electrical system.

B. Except as otherwise indicated, the complete electrical installation including equipment and metallic raceways, boxes and cabinets shall be completely and effectively grounded in accordance with all Code requirements, whether or not such connections are specifically shown or specified.

C. Provide telecommunication system ground bus bars with each building main telecommunications equipment room or cabinet/rack location. Provide connection between the bus bar and main building reference ground bus, the ground bus of the panelboard serving power to telecommunication equipment, and all telecommunication conduit, cable trays, cable ladders and boxes.

1.4 SUBMITTALS

A. Submit manufacturer's data for equipment and materials specified within this Section in accordance to Section 26 05 00.

1.5 QUALITY ASSURANCE

A. All materials, equipment and parts comprising the materials specified herein shall be new and unused, bearing UL labels where applicable.

PART 2 -PRODUCTS

2.1 INSULATED GROUNDING BUSHINGS

A. Plated malleable iron body with 150°C molded plastic insulated throat and lay-in ground lug; OZ/Gedney BLG, Thomas & Betts #TIGB series or equal.

2.2 CONNECTIONS TO STRUCTURAL STEEL, GROUND RODS OR SPICES

A. Where required by the Drawings, grounding conductors shall be spliced together, connected to ground rods or connected to structural steel using exothermic welds, Cadweld or equal, or high pressure compression type connectors, Cadweld, Thomas & Betts or equal.

2.3 BONDING JUMPERS

A. OZ/Gedney Type BJ, Thomas & Betts #3840 series or equal.

2.4 GROUND CONDUCTOR

A. Ground conductor shall be #6 AWG UL labeled, Type THWN insulated copper wire, green in color.

2.5 TELECOMMUNICATION MAIN GROUNDING BUS BAR (TMGB)

A. Provide grounding bus bar at telecommunication backboards, racks and cabinets of the following type:

1. Backboards 4'X8' and greater, floor mounted telecommunication equipment racks/cabinets larger than 60" height or wall mounted cabinets greater than 36"Wx36"H

   a. Provide 1 13.5"x2"x1/4" TK copper bus bar mounted on wall with insulating stand-offs at +96" AFF. Furnish complete with cast copper alloy body Thomas Betts Series 310 or equal lugs for connecting grounding conductors. Attach lugs to bus with appropriate size bronze bolt, flat washer and Belleville washer. All connections shall be torque, and all holes shall be drilled and tapped for single hole lugs. Provide 4 spare lugs with respective spaces.

2. Backboards less than 4'X8', floor/wall mounted telecommunication equipment racks/cabinet less than 60" or wall mounted cabinets less than 36"Wx36"H

   a. Provide an aluminum loadcenter ground kit with 14 terminals minimum, General Electric TGL2 or equal. A minimum of 3 terminals shall accommodate #6 AWG. Mount within enclosure or on backboard at +96" AFF.

PART 3 -EXECUTION

3.1 INSTALLATION

A. Telecommunication system grounding

1. Bond all telecommunication conduit, cable tray, ladder rack, equipment racks and all other metallic telecommunication infrastructure components to the nearest TMGB using a #6 AWG conductor.

2. Provide #6 AWG ground within ¾" conduit from each secondary backboard, cabinet, rack, etc. to the BGB.

3. Install #6 AWG grounding conductor in nonmetallic underground raceways containing only fiber optic cable.

4. Provide an engraved nameplate mechanically fastened to wall or enclosure adjacent to each TMGB. Nameplate shall be blue with ¼" high white lettering to read "TMGB-(name of enclosure or building)".

3.2 FIELD QUALITY CONTROL

A. Contractor using test equipment expressly designed for that purpose shall perform all ground resistance tests in conformance with IEEE Standard 1100. Contractor shall submit typewritten records of measured resistance values to Engineer for review and approval prior to energizing the system.

B. Obtain and record ground resistance measurements both from electrical equipment ground bus to the ground electrode and from the ground electrode to earth. Furnish and install additional bonding and add grounding electrodes as required to comply with the following resistance limits:

1. Resistance from ground bus to ground electrode and to earth shall not exceed 5 ohms unless otherwise noted.

2. Resistance from the farthest panelboard, loadcenter, switchboard or motor control center ground bus to the ground electrode and to earth shall not exceed 20 ohms maximum.

C. Obtain and record ground resistance measurements (DC, 60Hz, 10MHz, 20MHz, 33 MHz, 66MHz and 100MHz) both from each TMGB to the ground electrode and from the ground electrode to earth.

D. Inspection

1. The Engineer or Inspector prior to encasement, burial or concealment thereto shall review the grounding electrode and connections.

END OF SECTION

CONFORMED

SECTION 28 05 33

PATHWAY FOR ELECTRONIC SAFETY AND SECURITY

PART 1 - GENERAL

1.1 SUMMARY

A. Section includes

1. Provide all labor, materials and equipment necessary to complete the installation required for the items specified under this Section, including but not limited to electrical conduits; outlet, junction and pull boxes; and related supports.

B. Related sections

1. Where items specified in other Division 26 sections conflict with the requirements of this Section, the most stringent requirement shall govern.
    a. 26 05 26 – Grounding and Bonding for Electrical Systems
2. The requirements of this Section apply to all Division 26 work, as applicable.
3. Consult all other sections, determine the extent and character of related work and properly coordinate work specified herein with that specified elsewhere to produce a complete installation.

1.2 REFERENCES

A. Comply with the latest edition of the following applicable specifications and standards except as otherwise shown or specified:

1. ANSI –American National Standards Institute
    a. C33.91; Specification for Rigid PVC Conduit
    b. C80.1; Specification Rigid Steel Conduit, Zinc-Coated
    c. C80.3; Specification for Electrical Metallic Tubing, Zinc-Coated
    d. C80.6; Intermediate Metal Conduit (IMC), Zinc-Coated
2. CCR –California Code of Regulations, Title 24
    a. Part 2 -California Building Code (CBC); ICBO Uniform Building Code (UBC) with California amendments
    b. Part 3 -California Electrical Code(CEC); NFPA 70 National Electrical Code (NEC) with California amendments
3. NECA –National Electrical Contractors Association
    a. 101, Standard for Installing Steel Conduit (Rigid, IMC, EMT)
    b. 111, Standard for Installing Nonmetallic Raceways (RNC, ENT, LFNC) (ANSI)
4. NEMA –National Electrical Manufacturer’s Association
    a. FB 1; Fittings, Cast Metal Boxes, and Conduit Bodies for Conduit, Electrical Metallic Tubing, and Cable
    b. FB 2.10; Selection and Installation Guidelines for Fittings for Use with Non-flexible Electrical Metal Conduit or Tubing (Rigid Metal Conduit, Intermediate Metal Conduit, and Electrical Metallic Tubing)
    c. FB 2.20; Selection and Installation Guidelines For Fittings for Use With Flexible Electrical Conduit and Cable
    d. OS 1; Sheet-Steel Outlet Boxes, Device Boxes, Covers, and Box Supports
    e. OS 3; Selection and Installation Guidelines for Electrical Outlet Boxes

f. RN 1; Polyvinyl-Chloride Externally Coated Galvanized Rigid Steel Conduit and Electrical Metallic Tubing

g. TC 2; Electrical Plastic Tubing and Conduit

h. TC 3; PVC Fittings for Use with Rigid PVC Conduit and Tubing

i. TC 14; Reinforced Thermosetting Resin Conduit (RTRC) and Fittings

5. OSHPD Anchorage Pre-approvals

a. OPA-0003; Superstrut Seismic Restraint System

b. OPA-0114; B-Line Seismic Restraints

c. OPA-0120; Unistrut Seismic Bracing System

d. OPA-0242; Power-Strut Seismic Bracing System

6. UL –Underwriter's Laboratories, Inc.

a. 1; Standard for Flexible Metal Conduit

b. 6; Rigid Metal Electrical Conduit

c. 360; Standard for Liquid-Tight Flexible Steel Conduit

d. 514A; Metallic Outlet Boxes, Electrical

e. 514B; Fittings for Conduit and Outlet Boxes

f. 651; Schedule 40 & 80 PVC Conduit

g. 797; Electrical Metallic Tubing

h. 1242; Intermediate Metal Conduit

i. 1684; Reinforced Thermosetting Resin Conduit (RTRC) and Fittings

1.3 SYSTEM DESCRIPTION

A. Furnish, assemble, erect, install, connect and test all electrical conduits and related raceway apparatus required and specified to form a complete installation.

1.4 SUBMITTALS

A. Submit manufacturer's data for materials specified within this Section in accordance to Section 26 05 00.

1.5 QUALITY ASSURANCE

A. All materials, equipment and parts comprising the materials specified herein shall be new and unused, bearing UL labels where applicable.

B. Installation shall conform to the NECA installation guidelines unless otherwise indicated within this Section

PART 2 -– PRODUCTS

2.1 MATERIALS

A. Conduits and Fittings

1. Rigid steel conduit (RMC)

a. Conduit: Standard weight, mild steel pipe, and zinc coated on both inside and outside by a hot dipping or shearardizing process manufactured in accordance with UL 6 and ANSI C80.1 specifications.

b. Fittings (couplings, elbows, bends, etc.)

1) Shall be steel or malleable iron.

2) Coupling and unions shall be threaded type, assembled with anti-corrosion, conductive and anti-seize compound at joints made absolutely tight to exclude water.

c. Bushings

1) Insulating bushings: Threaded polypropylene or thermosetting phenolic rated at 150°C minimum.

2) Insulating grounding bushing: Threaded cast body with insulating throat and steel “lay-in” ground lug.

3) Insulating metallic bushing: Threaded cast body with plastic insulated throat rated at 150°C minimum.

2. Coated rigid steel conduit (CRMC)

a. Conduit: Equivalent to RMC with a Polyvinyl chloride (PVC) coated bonded to the galvanized outer surface of the conduit. The bonding between the PVC coating and conduit surface shall be ETL PVC-001 compliant. The coating thickness shall be a minimum of 40mil.

b. Fittings (couplings, elbows, bends, etc.)

1) Equivalent to RMC above with bonded coating same as conduit.

2) The PVC sleeve over fittings shall extend beyond hub or coupling approximately one diameter or 1 1/2” whichever is smaller.

c. Bushing equivalent to RMC above.

3. Intermediate metallic conduit(IMC)

a. Conduit: Intermediate weight, mild steel pipe, meeting the same requirements for finish and material as rigid steel conduit manufactured in accordance with UL 1242 and ANSI C80.6 specifications.

b. Fittings (couplings, elbows, bends, etc.) equivalent to RMC above.

c. Bushing equivalent to RMC above.

4. Electrical metallic tubing (EMT)

a. Conduit: Cold rolled steel tubing with zinc coating on outside and protective enamel on inside manufactured in accordance with UL 797 and ANSI C80.3 specifications.

b. Couplings: Steel or malleable iron with compression type fastener via a nut.

c. Connectors: Steel or malleable iron with compression type fastener via a nut with plastic insulated throat rated at 150°C minimum.

5. Rigid non-metallic conduit (PVC)

a. Conduit: PVC composed Schedule 40, 90°C manufactured in accordance with NEMA TC 2 and UL 651 specifications.

b. Fittings: Molded PVC, slip on solvent welded type in accordance to NEMA TC 3.

6. Reinforced thermosetting resin conduit (RTRC)

a. Conduit: Fiber impregnated with a cured thermosetting resin compound in accordance with NEMA TC 14 and UL1684.

b. Fittings: Molded resin with glass reinforcement manufactured in the same process as the conduit bonded with an epoxy adhesive.

7. Flexible metallic conduit (FMC)

a. Conduit: Continuous, flexible steel spirally wound with zinc coating on both inside and outside in accordance with UL 1.

b. Connectors: Steel or malleable iron with compression type fastener via a nut with plastic insulated throat rated at 150°C minimum.

8. Liquidtight flexible metallic conduit (LFMC)
    a. Conduit: PVC coated, continuous, flexible steel spirally wound with zinc coating on both inside and outside in accordance with UL 360.
    b. Connectors: Steel or malleable iron with compression type fastener via a nut with plastic insulated throat rated at 150°C minimum.
9. Miscellaneous Fittings and Products
    a. Conduit sealing bushings: Steel or cast malleable iron body and pressure clamps with PVC sleeve, neoprene sealing grommets and PVC coated steel pressure rings. Supplied with neoprene sealing rings between body and PVC sleeve.
    b. Watertight cable terminators: One piece, compression molded sealing ring with PVC coated steel pressure disks, stainless steel screws and zinc plated cast iron locking collar.
    c. Watertight cable/cord connectors: Liquidtight steel or cast malleable iron body with sealing neoprene bushing and stainless steel retaining ring.
    d. Expansion fittings: Multi-piece unit of hot dip galvanized malleable iron or steel body and outside pressure bussing design to allow a maximum of 4” movement (2” in either direction). Furnish with external braid tinned copper bonding jumper. UL listed for both wet and dry locations.
    e. Expansion/deflection couplings: Multi-piece unit comprised of a neoprene sleeve, internal flexible tinned copper braid attached to bronze end couplings with stainless steel bands. Coupling to provide minimum of 3/4” movement and 30 degrees deflection from normal. UL listed for both wet and dry locations.
    f. Conduit bodies: Raintight, malleable iron, hot-dip galvanized body with threaded hubs, stamped steel cover, stainless steel screws and neoprene gasket.
    g. Other couplings, connectors and fittings shall be equal in quality, material and construction to items specified herein.

B. Boxes
1. Outlet boxes
    a. Standard: Galvanized one-piece of welded pressed steel type in accordance with NEMA OS 1 and UL 514. Boxes shall not be less than 4” square and at least 1 1/2” deep.
    b. Concrete: Galvanized steel, 4” octagon ring with mounting lug, backplate and adapter ring type in accordance with NEMA OS 1 and UL 514. Depth as required by application.
    c. Masonry: Galvanized steel, 3.75” high gang box in accordance with NEMA OS 1 and UL 514.
    d. Surface cast metal: Cast malleable iron body, surface mounted box with threaded hubs and mounting lugs as required in accordance with NEMA OS 1 and UL 514. Furnish with ground flange, steel cover and neoprene gasket.
2. Pull and junction boxes
    a. Sheet metal boxes: Standard or concrete outlet box wherever possible; otherwise use 16 gauge galvanized sheet metal, NEMA 1 box sized per CEC with machine screwed cover.
    b. Cast metal boxes: Install standard cast malleable iron outlet or device box when possible.
    c. Flush mounted boxes: Install overlapping cover with flush head screws.
    d. In-ground mounted pull holes/boxes: Install pre-cast concrete box, sized per Drawing or CEC with pre-cast or traffic rated lid.
3. Floor boxes
    a. Floor boxes shall be adjustable, cast metal body with threaded conduit openings, adjustable rings, brass flange or Lexan ring and cover plate with threaded plug. Include provisions to accommodate surface mounted telephone or receptacle outlet, or flush floor mounted telephone or receptacle outlet where shown on Drawings.

C. Pull line/cord

1. Polypropylene braided line or Let-line #232 or equal of 1/8” diameter with a minimum break strength of 200 pounds.

PART 3 -EXECUTION

3.1 EXAMINATION

A. Thoroughly examine site conditions for acceptance of wire and cable installation to verify conformance with manufacturer and specification tolerances. Do not commence with work until all conditions are made satisfactory.

3.2 PREPARATION

A. Conduit

1. Provide all necessary conduit fittings, connectors, bushings, etc. required to complete conduit installation to meet the CEC/NEC and intended application whether noted, shown or specified within.
2. Location of conduit runs shall be planned in advance of the installation and coordinated with other trades.
3. Where practical, install conduits in groups in parallel vertical or horizontal runs that avoid unnecessary offsets.
4. All conduits shall be parallel or at right angles to columns, beams and walls whether exposed or concealed.
5. Conduits shall not be placed closer than 12” to a flue, parallel to hot water, steam line or other heat sources; or 3” when crossing perpendicular to the above said lines when possible.
6. Install exposed conduit as high as practical to maintain adequate headroom. Notify Engineer if headroom will be less than 102”.
7. Do not obstruct spaces required by Code in front of electrical equipment, access doors, etc.
8. The largest trade size conduit in concrete floors and walls shall not exceed 1/3 thickness or be spaced a less than three conduit diameters apart unless permitted by Engineer. All conduits shall be installed in the center of slab or wall, and never between reinforcing steel and bottom of floor slab.
9. Install additional pull boxes, not shown on Drawings, in sufficient quantities to facilitate pulling of conductors and cables such that total spacing does not exceed 150 feet or 270 degrees, total; and maximum pulling tension will not be exceeded.
10. When installing underground conduits to specified depth; depth shall be taken from finished grade as it will be at project completion. Should finish grade be above existing grade by an amount equal to or greater than specified depth, conduit shall be installed not less than 6” below existing grade.
11. Verify that information concerning finish grade is accurate, for should the underground run be less than the specified depth, Contractor may be required to re-install conduit to meet the required depth.
12. Unless otherwise specified, underground conduits shall be installed with top side not less than 24” below finished grade; this depth applies to all conduits outside of building foundations including those under walks, open corridors or paved areas.
13. Utility company service conduits installation depth shall be as directed by their respective specifications and requirements.

B. Boxes

1. Before locating outlet boxes, check Construction Documents for type of construction and make sure that there is no conflict with other equipment. Locate outlet boxes as shown and locate so as not to interfere with other Work or equipment.
2. Install all outlet boxes flush within walls, ceiling and floors except where installed within non-finished rooms, cabinetry, attic spaces or as indicated on Drawings.
3. Locate pull boxes and junction boxes within concealed, accessible locations where possible.
4. Do not install outlet boxes back-to-back with same stud space. Where shown back-to-back, offset as required, and fill void with sound dampening material where requested by Owner.
5. In fire rated walls separate boxes by 24" minimum and with stud member.
6. Adjust position of outlet boxes within masonry wall to accommodate course lines.

3.3 INSTALLATION

A. Conduit

1. Minimum conduit size shall be 3/4" unless otherwise indicated.
2. All conduit work shall be concealed unless otherwise indicated. Exposed conduits shall be permitted within unfinished rooms/spaces to facilitate installation.
3. Install conduit in complete runs prior to installing conductors or cables.
4. Make long radius conduits bends free from kink, indentations or flattened surfaces. Make bends carefully to avoid injury or flattening. Bends 1 1/4" size and larger shall be factory made ells, or be made with a manufactured mechanical bender. Heating of steel conduit to facilitate bending or that damage galvanized coating will not be permitted.
5. Remove burrs and sharp edges at end of conduit with tapered reamer.
6. Protect and cover conduits during construction with metallic bushings and bushing "pennies" to seal exposed openings.
7. Assemble conduit threads with anti-corrosion, conductive, anti-seize compound and tighten securely.
8. Install conduits shall that no traps to collect condensation exist.
9. Fasten conduit securely to boxes with locknuts and bushings to provide good grounding continuity.
10. Install pull cords/line within any spare or unused conduits of sufficient length to facilitate future cable installation.
11. Penetrations
    a. Locate penetrations within structural members as shown on Drawings and as directed by Architect or Engineer. Should it be necessary to notch any framing member, make such notching only at locations and in a manner as approved by Engineer.
    b. Do not chase concrete or masonry to install conduit unless specifically approved by Engineer.
    c. Cutting or holes
        1) Install sleeves for cast-in-place concrete floors and walls. After installing conduit through penetration, seal using dry-pack grouting compound (non-iron bearing, chloride free and non-shrinking) or fire rated assembly if rated floor or wall. Use escutcheon plate on floor underside to contain compound as necessary.
        2) Cut holes with a hole saw for penetrations through non-concrete or non-masonry members.
        3) Provide chrome plated escutcheon plates at all publicly exposed wall, ceiling and floor penetrations.
    d. Sealing

1) Non-rated penetration openings shall be packed with non-flammable insulating material and sealed with gypsum wallboard taping compound.

2) Fire rated penetration shall be sealed using a UL classified fire stop assembly suitable to maintain the equivalent fire rating prior to the penetration.

3) Use escutcheon plates to hold sealing or fire rated compound as necessary.

e. Waterproofing

1) Make penetrations through any damp-proofed/waterproofed surfaces within damp/wet locations as such as to maintain integrity of surface.

2) Install specified watertight conduit entrance seals at all below grade wall and floor penetrations.

3) At roof penetrations furnish roof flashing, counter flashing and pitch-pockets compatible to roof assembly.

4) Where possible conduits that horizontally penetrate a waterproof membrane shall fall away from and below the penetration's exterior side.

5) Make penetrations through floors watertight with mastic, even when concealed within walls or furred spaces.

12. Supports

a. Conduits shall be support and braced per OSHPD pre-approved anchorage systems when those methods are implemented and installed.

b. Sizes of rods and cross channels shall be capable of supporting 4 times and 5 times actual load, respectively. Anchorage shall support the combined weight of conduit, hanger and conductors.

c. Support individual horizontal conduit 1 1/2" and smaller by means of 2 hole straps or individual hangers.

d. Galvanized iron hanger rods sizes 1/4" diameter and larger with spring steel fasteners, clips or clamps specifically design for that purpose for 1 1/2" conduits and larger.

e. Support multi-parallel horizontal conduits runs with trapeze type hangers consisting of 2 or more steel hanger rods, preformed cross channels, 'J' bolts, clamps, etc.

f. Support conduit to wood structures by means of bolts or lag screws in shear, to concrete by means of insert or expansion bolts and to brickwork by means of expansion bolts.

g. Support multi-parallel vertical conduits runs with galvanized Unistrut, Power-Strut or approved equal type supports anchored to wall. Where multi-floored conduits pass through floors, install riser clamps at each floor.

h. Maximum conduit support spacing shall be in accordance with NECA Standard of Installation:

1) Horizontal runs:

a) 3/4" and smaller at 60" on centers, unless building construction prohibits otherwise, then 84" on centers.

b) 1" and larger at 72" on centers, unless building construction prohibits otherwise or any other condition, then 120" on centers.

2) Vertical runs:

a) 3/4" and smaller @ 84" on centers.

b) 1" and 1 1/4" @ 96" on centers.

c) 1 1/2" and larger @ 120" on centers.

d) Any vertical condition such as shaftways and concealed locations for any sized conduit, 120" on centers.

i. Anchorage for RMC/IMC supports unless otherwise specified:

1) < 1” IMC/RMC = #10 bolt/screw.
2) 1” IMC/RMC = 1/4” bolt/screw.
3) 1 1/2” and 2” IMC/RMC = 3/8” bolt/screw.
4) 3” IMC/RMC, 4” EMT = 1/2” bolt/screw.
5) > 3”IMC/RMC = 5/8” bolt/screw.

j. Anchorage for EMT supports unless otherwise specified:

1) < 1 1/2” EMT = #10 bolt/screw.
2) 1 1/2” EMT = 1/4” bolt/screw.
3) 2, 2 1/2” and 3” EMT = 3/8” bolt/screw.
4) 4” EMT = 1/2” bolt/screw.
5) > 4”EMT = 5/8” bolt/screw.

B. Boxes

1. Install boxes as shown on Drawings and as required for splices, taps, wire pulling, equipment connections and Code compliance.
2. Install additional pull boxes, not shown on Drawings, in sufficient quantities to facilitate pulling of conductors and cables such that total spacing does not exceed 150 feet or 270 degrees, total; and maximum pulling tension will not be exceeded.
3. Install plaster rings on all outlet boxes in stud walls or in furred, suspended or exposed ceilings. Covers shall be of a depth suited for installation.
4. Provide gasketed cast metal cover plates where boxes are exposed in damp or wet locations
5. Install access door for boxes installed within concealed locations without access.
6. Install approved factory made knockout seal where knockouts are not present.
7. Refer to Architectural interior elevations and details shown for exact mounting heights of all electrical outlets. In general, locate outlets as shown or specific and complies with Americans with Disabilities Act:
   a. Convenience outlets: +18”AFF or +6” above counter or splash.
   b. Local switches: +48”AFF or +6” above counter or splash.
   c. Telecommunication outlets: +18”AFF or +48”AFF for wall telephone or intercom device.
   d. Verify all mounting heights with Architectural Drawings, and where heights are not suited for construction or finish please consult Engineer or Architect.
8. Use conduit bodies to facilitate pulling of conductor or cables or change conduit direction. Do not splice within conduit bodies.
9. Enclose pull box with additional rated gypsum board as necessary to maintain wall’s original fire rating.
10. Install galvanized steel coverplates on all open boxes within dry listed areas.
11. Install in-ground pull holes/boxes flush to grade finish at finished areas or 1” above finished landscaped grade. Seal all conduits terminating in pull hole/box watertight. Install and grout around bell ends where shown. Cover and lids shall be removable without damage to adjacent finish surfaces.
12. Support
    a. Accurately place boxes for finish, independently and securely supported by adequate blocking or manufacturer channel type heavy-duty box hangers for stud walls. Do not use nails to support boxes.
    b. Support boxes independent of conduit system.

c. Mount boxes installed within ceilings to 16 gauge metal channel bars attached to main runners or joists.

d. Support boxes within suspended acoustical tile ceilings directly from structure above when light fixture are to be installed from box.

e. Use auxiliary plates, bar or clips and grouted in place for masonry, block or pour-in-place concrete construction.

3.4 APPLICATION

A. Conduit

1. RMC/IMC suitable for all damp, dry and wet locations except when in contact with earth. IMC not suitable for hazardous locations as stated within CEC/NEC.
2. CRMC suitable for damp or wet locations, concealed within concrete or in contact with earth.
3. EMT suitable for exposed or concealed dry, interior locations.
4. PVC/RTRC suitable for beneath ground floor slab, except when penetrating, and direct earth burial. Do not run exposed within concrete walls or in floor slab unless indicated on Drawings or per Engineer's permission.
5. FMC suitable for dry locations only for connections to motors, transformers, vibrating equipment/machinery, controllers, valves, switches and light fixtures in less than 6 foot lengths.
6. LFMC application same as FMC above but for damp or wet locations.

B. Termination and joints

1. Use raceway fittings compatible with associated raceway and suitable for the location.
2. Raceways shall be joined using specified couplings or transitions where dissimilar raceway systems are joined.
3. Conduits shall be securely fastened to cabinets, boxes and gutters using (2) two locknuts and insulating bushing or specified insulated connector. Where joints cannot be made tight and terminations are subject to vibration, use bonding jumpers, bonding bushings or wedges to provide electrical continuity of the raceway system. Use insulating bushings to protect conductors where subjected to vibration or dampness. Install grounding bushings or bonding jumpers on all conduits terminating at concentric or eccentric knockouts.
4. Terminations exposed at weatherproof enclosures and cast outlet boxes shall be made watertight using specified connectors and hubs.
5. Stub freestanding equipment conduits through concrete floors for connections with top of coupling set flush with finished floor. Install plugs to protect threads and entrance of debris.
6. Install specified cable sealing bushings on all conduits originating outside the building walls and terminating within interior switchboard, panel, cabinet or gutters. Install cable sealing bushings or raceway seal for conduit terminations in all grade level or below grade exterior pull, junction or outlet boxes.
7. Where conduits enter building from below grade inject into filled raceways pre-formulated rigid 2 lbs. density polyurethane foam suitable for sealing against water, moisture, insects and rodents.
8. Install expansion fitting or expansion/deflection couplings per manufacturer's recommendations where:

   a. Any conduit that crosses a building structure expansion joint; secure conduit on both sides to building structure and install expansion fitting at joint.

   b. Any conduit that crosses a concrete expansion joint; install expansion/deflection at joint.

   c. Any conduit greater than 1-1/4" is routed along roof top in runs greater than 100 feet; install expansion fittings every 100 feet.

d. Engineer may allow FMC or LFMC in lieu of expansion fitting or expansion/deflection couplings on conduits 2” and smaller within accessible locations upon further review and written consent.

C. Boxes

1. Standard type suitable for all flush installations and all dry concealed locations.
2. Concrete type suitable for all flush concrete installations.
3. Masonry type suitable for all flush concrete and block installations.
4. Surface cast meta type suitable for all exposed damp and wet surface mounted locations, and dry surface mounted locations less than 96” from finished floor

END OF SECTION

CONFORMED

SECTION 28 16 00

INTRUSION DETECTION SYSTEM

PART 1 - GENERAL

1.1 SUMMARY

A. Section includes

1. Provide all labor, materials and equipment necessary to complete the installation required for the items specified under this Section, including but not limited to intrusion detection systems and their components.

B. Related sections

1. Where items specified in other Division 26 sections conflict with the requirements of this Section, the most stringent requirement shall govern.
   a. 26 05 26 – Grounding and Bonding for Communications
   b. 26 05 33 – Raceway and Boxes
2. The requirements of this Section apply to all Division 26 work, as applicable.
3. Consult all other sections, determine the extent and character of related work and properly coordinate work specified herein with that specified elsewhere to produce a complete installation.

1.2 REFERENCES

A. Comply with the latest edition of the following applicable specifications and standards except as otherwise shown or specified.

1. UL -Underwriter's Laboratories, Inc.
   a. 365; Police Station Burglar Alarm Units and Systems
   b. 609; Local Burglar Alarm Units and Systems
   c. 639; Intrusion Detection Units
   d. 864; Control Units for Fire-Protective Signaling Systems
   e. 1023; Household Burglar-Alarm System Units
   f. 1076; Proprietary Burglar Alarm Units and Systems
   g. 1610; Central-Station Burglar-Alarm Units
   h. 1635; Digital Alarm Communicator System Units

1.3 SYSTEM DESCRIPTION

A. The Digital Alarm Communicator and Access Control System (DACS) specified herein shall include a Digital Alarm Communicator Transmitter (DACT), built-in telephone line monitor, up to 1000 event memory logger, real time clock, calendar, test timer, battery charging / voltage supervision circuitry, battery lead supervision, diagnostics displays, time / event-based scheduling system, lightning / EMI protection circuits, and the associated optional modules and components for a complete DACS.

B. The DACS shall support the connection and reporting of intrusion control devices to a remote Digital Alarm Communicator Receiver (DACR).

C. The DACS shall provide identification, annunciation, and communication of alarmed detectors by point and each access control user by number.

D. The DACS shall be capable of segregating the points (i.e., a detector or group of detectors zoned together) into separate, independent "areas."

E. The DACS shall be "modularly" expandable using hard-wired address identification modules.

F. The DACS shall have electrically supervised detection loops and power supplies. This supervision shall be programmable for the purposes of reporting this information to the DACR.

G. The DACS shall be capable of monitoring and switching to active telephone lines when trying to establish communications with the DACR and transmitting a report.

H. The DACS shall be capable of reporting and communicating alarm or trouble event data by reporting to one, two, three or four off-site remote DACRs via dial-up analog telephone lines or over a local or wide area network using a network interface module.

I. The DACS shall be capable of sending (manually or automatically) test and status reports to remote DACRs.

J. The DACS shall be programmable locally or remotely. Programming shall be accomplished via a portable programmer or a computer running the Remote Programming Software (RPS). Users shall be capable of changing their own user passcode from the Alarm Command Center (ACC) and managers shall be capable of changing the user passcodes and authority assignments by area of other users from the ACC.

K. The DACS shall annunciate alarm, trouble, service reminders, and other relevant system status messages in custom English text at the ACC.

L. The DACS shall be capable of executing diagnostics and testing functions locally or remotely.

M. The DACS shall be capable of activating 128 relays and three additional outputs for auxiliary functions based on its classifications (area vs. panel wide).

N. The DACS shall be capable of controlling relays and automatically executing system functions based on a time / event scheduling program. The program can be hour, day of week or day of month based. Each scheduled event can be exclusive of one of four holiday date definitions that can include one to 365 selected Julian dates. The following functions can be executed:

1. Arm / Disarm a specific area
2. Bypass / Unbypass a point
3. Activate / Deactivate a relay
4. Send a test report
5. Adjust system clock for daylight savings time
6. Turn an Access Authority Level On / Off
7. Hold a Door Open (unlocked and shunted)
8. Secure a Door Closed (locked, no valid cards will allow entry)
9. Return a Door to Normal Operation (locked, valid cards will allow entry)
10. Turn recording of Access Granted events On / Off (and transmittal if routing is ON)
11. Turn recording of Access Denied events On / Off (and transmittal if routing is ON)

O. The DACS shall be capable of listening to calls answered by other devices on the premises side of the phone line and determining if a special tone is being sent from the incoming call, and intercepting the call for Remote Account Manager sessions.

1.4 SUBMITTALS

A. Submit manufacturer’s data for materials specified within this Section in accordance to Section 26 05 00.

B. Operating, maintenance and instruction manuals shall be furnished in accordance with General Conditions and Section 26 05 00.

C. Operating instruction manuals outlining the step-by-step procedures required for system start-up and operation shall be furnished. The instructions shall include manufacturer’s name, model number, service manual parts list, and brief description of all equipment and their basic operating features.

D. Maintenance instruction manuals outlining maintenance procedures shall be furnished. The manual shall include a troubleshooting guide listing possible breakdowns and repairs and a simplified connection wiring diagram for the system as installed.

E. Provide one copy of the remote programming software and related documentation for use by the Owner.

1.5 QUALITY ASSURANCE

A. All materials, equipment and parts comprising the materials specified herein shall be new and unused, bearing UL labels where applicable.

1.6 DELIVERY, STORAGE AND HANDLING

A. Handle carefully to avoid damage to internal components, enclosure and finish.

B. Store in a clean, dry environment. Maintain factory packaging and, if required, provide an additional cover to protect enclosure in harsh environments.

1.7 WARRANTY

A. Furnish guarantee in accordance with and in form required under Section 26 05 00.

1.8 SYSTEM STARTUP

A. Refer to manufacturer’s documentation to start-up procedures and requirements.

B. The Contractor shall demonstrate the system functionality to manufacturer’s specifications and requirements after completion of installation.

PART 2 -PRODUCTS

2.1 CONTROL PANEL

A. Manufacturer

1. Bosch Security Systems D9412G or approved equal.

B. System features/capability summary

1. Number of Loops/Sensors: 246 separately identifiable points, of which 8 are on-board loops and 238 are off-board addressable points / zones connected to multiplexed backbone trunks. Each of the points shall be capable of supporting "group zoning." Group zoning refers to the combining of sensors into a separately identifiable and separately annunciated (programmable text) area.

2. Programming Point Functionality: Each point in the system shall provide for the following type of response in the system.

   a. Always on (24 hour response)

   b. On when the system is Master Armed

   c. Only on when the system is Perimeter Armed

   d. Displays / Does Not Display at the ACC when the point is activated

   e. Provides / Does Not Provide entry warning tone

   f. Sounds / Does Not Sound audible alarm indication

   g. The Point is bypassable / not bypassable

   h. Alarm Verification with programmable verification time

   i. Relay activation by Point

   j. Provides / Does Not Provide "watch point" capability

k. Provides Swinger Bypass

l. Defers Bypass Report

m. Can return to the system after being force armed and then restoring

n. Can return to the system after being bypassed and then restoring

3. Areas/Accounts: The DACS shall support 8 independent areas. Each of the eight (8) areas shall have custom text associated with the armed state, disarmed state and point-off-normal state. Additionally, the DACS shall be capable of assigning 1 to 8 account identifiers to the areas depending on the distribution of areas per account. Each and all of the eight areas must be capable of Master and/or Perimeter arming (excluding predefined Interior protection). The DACS shall be capable of logically grouping 2 or more points into an area, or conversely, dividing the points into two or more areas. Any area shall be configurable to allow arming by specific users when a programmable number of devices are faulted or bypassed. Areas shall be independently controlled by their corresponding ACC. Each ACC can be designated to control a specific area, or group of areas, or all areas in the system. Independent control or relay functions by area shall be possible through programming assignments.

4. Number of Alarm Command Centers: 32 Unsupervised ACCs, each capable of displaying custom English text on vacuum fluorescent displays and sounding different patterns of audible alarm for different events, shall be required. Up to Eight (8) ACCs can be supervised at one time. An ACC can be programmed to respond to the entry of any of the specifically authorized 250 user passcodes. The event is logged and transmitted (if routing is ON) to the DACR including door and user identity.

5. Number of User Passcodes: Up to 249 different passcodes shall be required. Each passcode shall be three (3) to six (6) digits (variable) and be assigned a 16-character user name that shall be printed on the local printer and DACR with associated opening and closing reports from the user. Passcodes shall be enabled or disabled by area(s) and shall be assigned one of fourteen (14) different authority levels to carry out functions such as the activation of relays from the ACC. These passcodes shall also be required for carrying various system functions such as arming the system, disarming the system, transmitting a duress code, resetting the system and silencing sounders. A single user passcode shall be able to be used in each of the 8 areas with potentially a different authority level in each area.

6. Communication Formats: The Radionics Modem IIIa2 communications format shall be utilized for optimum system performance. The DACT shall report to a Commercial Central Station using a Bosch Security Systems D6500 or D6600 Alarm Receiver that supports the Radionics Modem IIIa2 communications format. One such advantage is point identification information transmission to DACRs (Alarms, Troubles and Restorals by point). Others include actual point number; point text; actual user number, user name; by-passed points; relay activation; opening/closing reports by users; late, early, or fail opening/closing reports, and opening/closing reports by area.

7. Testing, Diagnostic, and Programming Facilities: Automatic test reports and remote system access for diagnostics, programming, and log (Logger) uploads shall also be supported via a remote central station computer utilizing the RPS software.

8. Logger Capacities and Formats: Up to 1000 events indicating time, date, type of event, account number, area number, user ID, point text, user text and primary/secondary event route each event. Logs shall be viewed locally at the ACC and remotely via an upload to a computer running the RPS software. The DACS shall also support the printing of these events on up to three local printers. The DACS shall also send a report to the DACR when the log reaches a programmable "percent full capacity" so that RPS can retrieve the stored events. Group, signal type and area can rout events to specific printers.

9. Reports: Reports to DACRs at commercial central stations as a result of system supervision shall include alarm, trouble, missing modules, restoral, system status, AC failure and low battery. The DACS shall also transmit test reports once every 24 hours. CPU failure shall be annunciated locally. The ACCs should display the following information for the indicated system supervisory conditions:

a. Call for Service

b. Service Panel
c. Service Param
d. Service AC Fail
e. Service Battery Low
f. Service Battery Missing
g. Service Communications Failure
h. Service Keypad
i. Service Route
j. Service Printer
k. Service Point Buss Failure

10. Telephone Lines, IP Addresses, and "Phone Routing": The DACS shall support one (1) or two (2) telephone lines that are to be alternated for the transmission of consecutive events. The DACS shall have the capability of communicating with up to eight (8) different DACRs (4 different phone numbers) and/or four (4) different IP Addresses. Each Phone Number can be up to 24 digits long. The DACS reports shall be classified, by event, into eleven (11) subcategories or “report groups.” Each group represents similar types of events. Individual events within each group shall be selectively enabled or disable to be transmitted. Each DACR shall be designated as a primary, backup, or duplicate destination for each report group. Assigning an event to multiple routing groups provides for duplicate destination for the event. The transmission of events allows the reporting of different types of information to different remote DACRs. The eleven report groups shall be as follows:
    a. Burglar Reports
    b. User Reports
    c. Test Reports
    d. Diagnostic Reports
    e. Relay Reports
    f. Auto Function Reports
    g. RAM (RPS) Reports
    h. Point Reports
    i. User Change Reports
    j. Access Reports
11. Number of Programmable Relay Output Modules: 8 relays (Form C) are to be provided per relay module for a total of 128 relays plus three additional outputs per DACS. These multi-purpose modules are programmable and shall be used to implement auxiliary functions (manually or automatically). Relays and other outputs may be programmed to follow up to 14 different area conditions or up to 12 panel conditions. Relays may also be programmed to follow individual points or groups of points.
12. Number and Alarm Output Selections: Four (4) different types of alarm output selections shall be supported by the DACS: Steady, Pulsed, California Standard, and Temporal Code 3. The system can be configured to provide zoned indication of alarm conditions.
13. Miscellaneous Features: Programmable alarm output timer, 31 programmable entry delay times, exit delay programmable by area, individually programmable point of protection text, point bypassing, and keyswitch arming capability with LED outputs.
14. Real-Time Clock, Calendar, and Test Timer: The DACS shall incorporate an integral real-time clock, calendar, and a test timer.
15. Opening and Closing Windows: The system shall be programmed with "normal" opening and closing periods for each day of the week and thus suppress scheduled opening / closing reports

and report only the exceptions, i.e., opening / closing outside the pre-defined time window. The DACS shall have the capability to suppress opening / closing reports, overriding the programmed open / close windows during holidays and automatically arming the DACS (by area) at the end of the closing period.

16. DACS Power Ratings: The DACS shall provide 1.4 amps of auxiliary power and 2 amps of alarm power, both rated at 12 VDC.
17. DACS Fault Detection: The DACS shall check the point sensor loops once every 300 milliseconds. The point response time is programmable over a range of 300 milliseconds to 4.5 seconds.
18. User-Programmable Features: The DACS shall provide a menu driven interface to provide a user-friendly command structure for programming / customizing the system to the operational criteria of the application. The DACS shall be capable of being operated via:
    a. The Command Structure
    b. Menu / Command List
19. Shall be able to connect up to three parallel printers to the DACTS.
20. These system features shall have restrictions based on 14 individually programmable levels of passcode authority that can be assigned to system users. The user's passcode shall have the capability of being assigned a different authority level in each of the eight (8) areas. A service passcode can be assigned to the servicing agent allowing the agent limited access to system functions. User-programmable / activated functions include:
    a. Arming the system: All areas, specific area(s) only, perimeter instant, perimeter delayed, perimeter partial, watch mode, and arming the system with a duress passcode.
    b. Disarming the system: All areas, specific area(s) only and disarming with a duress passcode.
    c. Viewing system status: Faulted points, event memory, bypassed points, area status and point status.
    d. Implementation functions: Bypass a point, unbypass a point, reset sensors, silence bell, activating relays, initiating the remote programming function locally to allow programming the system from a remote location. The ACCs can also be temporarily readdressed to view the status of a remote area.
    e. Testing the system: Local Walk test, Service Walk test, Fire test, send report to remote DACR to check the telephone link, and programming the time and date for the next test report transmission.
    f. Change system parameters: ACC display brightness, system time and date, and add/delete/change passcodes.
    g. Extend the closing time of system.
    h. Transmitting special alerts and activating audible and visible signals.
    i. Executing multiple commands / ACC keystrokes from a single Menu / Command List item. This function shall be able to have a 16 character (alphanumeric) title to identify it on the ACC display.
    j. Editing of time / event based scheduling program from the ACC.
    k. The DACS shall also provide a "service menu" to implement functions such as viewing and printing the system log, displaying the system firmware revision number, and defaulting (toggling) text displays between custom and default text displays for troubleshooting.

C. Power supply

1. The 120Vac is stepped down to 16.5Vac to power the DACS panel using a class two, plug-in transformer. This power circuit shall be properly rated to continuously power all points and functions indefinitely in full alarm condition.
2. Primary power supervision: When the primary power source fails, the system can be configured to report an "AC Fail" message to a commercial central station. The transmission delay of this

message is programmable from 5 seconds to 86 minutes with an optional 6 to 12 hour transmission delay. The message can also be programmed to "tag-along" with another message transmitted to the central station. The system will always display a loss of primary power on the ACC and may be configured to provide additional audible warning.

3. Secondary power supervision: When the secondary power source experiences a 85% depletion of its standby capacity, the system can be configured to report a "Low Battery" message to a commercial central station. The system will always display a low battery condition on the ACC and may be configured to provide additional audible warning.

D. Storage batteries shall be lead-acid sealed types. The batteries shall have ample capacity with primary power disconnected to operate the system as required by UL 864 and 985.

E. Battery charger: Provide an automatic dual rate (high rate and float charge) battery charger capable of recharging batteries to 80% capacity within 8 hours. The charger output shall be supervised and fused. Charger shall be located with control panel or battery cabinet.

1. Telephone interface: The DACS shall be equipped with a phone line monitor and shall interface with the phone lines via RJ-31X jacks for supervision of the telephone line connection to the DACS panel. When a telephone line is determined to be out of service by the DACS panel, the event will be annunciated locally on the ACC and transmitted to the central station. The transmission delay of this message is programmable from ten (10) to two-hundred forty (240) seconds. A telephone line switching modules shall be used to interface to a second telephone line. This interface shall conform with FCC rules part 15 and 68.

2. Ethernet access: The DACS may use an Ethernet interface module as the primary means of communicating to a DACR. Up to four IP Addresses shall be available to route system events to. A programmable supervision time of 5 to 65,535 seconds shall be required.

3. Auxiliary function control interfaces: Auxiliary functions such as activating bells, strobes, or lights shall be accomplished using the optional relay modules. These auxiliary interfaces shall be electrically isolated to avoid inter-system interferences or damages.

4. Functional criteria programmed into system memory shall be backed up by battery power. Additionally, the number of system programmers shall be severely restricted via the use of program locking features and passwords.

5. Enclosure shall be steel with hinged, locking door.

2.2 COMMAND CENTERS

A. Manufacturer

1. Bosch Security Systems D1260 or approved equal.

B. General

1. Features a keypad that illuminates when you press the keys, a 4-line by 20-character display, and a built-in speaker that emits several distinct warning tones.

2. Programmable to generate messages to a central station receiver identifying the supervised command center that is in trouble.

3. Front Panel Features

a. LCD Display: The Command Center displays the latest status conditions of the security system using words, numbers, and symbols in its display. When a series of events occurs that affects the system, the unit displays each event in order of its priority.

b. Digital Keypad: The Command Center features a digital keypad for entering user passcodes and executing system commands in the panel. When a key is pressed, the unit emits a muted beep tone to indicate that the entry has been accepted, and the keypad lights and remains lit for 20 seconds.

c. Command Center Function Keys: The D1260 has ten numeric keys, two dedicated keys and 8 soft keys for accessing menu functions that are used to control the DACS.

C. The Command Center is a low profile, surface-mounted unit using a stainless back-plate to accommodate a single, two or three gang outlet box.

2.3 DETECTION DEVICES

A. Door contacts

1. Manufacturers

a. Ademco, Sentrol or approved equal.

2. General

a. The contact contains a hermetically sealed magnetic reed switch. The reed shall be potted in the contact housing with a polyurethane based compound. Contact and magnet housing shall snap-lock into a 3/4" or 1" diameter hole.

b. Snap-lock insulation bushing for tight fit and maximum gap in steel.

c. Both contact and magnet plastic housings are constructed of one piece of thick-walled ABS plastic for maximum strength and durability.

B. Motion sensors

1. Manufacturers

a. Bosch DS800/DS900 series, Ademco 2200 series or approved equal.

2. General

a. The detector shall operate using combined passive infrared (PIR) and microwave intrusion detection technologies.

b. The detector shall provide the detection, signal processing, alarm relay, and operating power circuitry in the same enclosure; and shall provide an alarm relay actuation upon the simultaneous detection of an intruder moving into or through its combined protection pattern.

c. The detector shall incorporate a three-color LED to indicate the different operating conditions.

d. The PIR detection shall use a highly advanced signal processing technique that shall require a specific signature and timing of signals to generate an alarm. The processor shall analyze the incoming signal and automatically adjust for target speed and signal strength.

e. The microwave detection shall incorporate both adaptive signal processing and pattern recognition technologies. Pattern recognition circuitry shall identify and ignore repetitive false alarm sources to reduce false activations while maintaining catch performance.

f. The detection circuitry shall be tested once every 12 hours via internal means and report any trouble status to control panel.

3. The installed detector shall have a coverage pattern to envelope the entire room/space. Vendor/supplier shall verify requirements with Drawings.

2.4 ACCESSORIES

A. Input Modules

1. Provide zone input modules designed to operate with compatible multiplex system. Module provides a means of addressing conventional input loops of conventional contacts to the multiplex bus.

B. Network Interface Module

1. Manufacturer

a. Bosch Security Systems DX4020 or approved equal.

2. General

a. The module creates two-way communications over ethernet networks for:

1) Reporting with Central Station Receiver (CSR).

2) Remote administration with Remote Programming Software (RPS).

b. The unit uses a standard CAT 3/5 cable with an RJ45 plug to connect to the network. A two-wire connection from the control panel bus and two wires connect to the control panel or a power supply for DC power.

c. The unit mounts within control panel enclosure.

d. Use ARP and TELNET commands from any PC to program the network interface module's IP address. The IP address can be dynamic using DHCP or the IP address can be static.

C. Remote Software

1. Manufacturer

a. Bosch Security Systems RPS-LITE or approved equal.

2. The software package allows computers equipped with the Microsoft Windows operating system and a modem to act as a remote programming, record storage, remote control, and troubleshooting tool for the DACS.

3. The software package view the control panel's and points' status; bypass and un-bypass points; perform arm and disarm, bell silence, sensor reset, relay, and time and date functions; retrieve and view control panel history; and view SDI and option bus device status.

PART 3 -EXECUTION

3.1 INSTALLATION

A. Work shall be installed as shown on the Drawings in accordance with the manufacturer's diagrams and recommendations, except where otherwise indicated.

B. Contractor shall provide initial setup and programming for all devices and software installed under this Section for a complete and operational system. System interfaces and operation shall be coordinated with Owner, where appropriate.

C. The Contractor shall properly earth ground the DACS to prevent electrostatic charges and other transient electrical surges from damaging the DACS panel.

D. Wiring: The contractor shall provide cables consistent with the manufacturer's recommendations and Specifications. The following general guidelines shall be followed for wiring installation:

1. Wiring shall be appropriately color-coded with permanent wire markers. Copper conductors shall be used.

2. All signal cables provided under this contract shall be Class II, plenum-rated cable where required.

3. Data wires shall not be enclosed in conduit or raceways containing AC power wires.

4. Where EMI may interfere with the proper operation of the DACS circuits, twisted/shielded cable shall be used.

3.2 FIELD QUALITY CONTROL

A. The Contractor shall demonstrate the system functionality to manufacturer's specifications and requirements after completion of installation.

B. The Engineer or Owner may order any changes, adjustments or further tests deemed necessary to assure that the system and its components are complete and operational in accordance with the Specifications.

3.3 ADJUSTING

A. Calibrate and adjust all equipment to manufacturer's standards in place and under dynamic field operating conditions per industry standards.

CONFORMED

3.4 DEMONSTRATION

A. The Contractor shall properly instruct the Owner to the operational procedures of the system.

B. Within the first 30 days from system startup, the equipment supplier shall provide no less than eight (8) hours for instruction and training.

END OF SECTION

CONFORMED

SECTION 28 23 00

CCTV SURVEILLANCE SYSTEM

PART 1 - GENERAL

1.1 SUMMARY

A. Section includes

1. Provide all labor, materials and equipment necessary to complete the installation required for the items specified under this Section, including but not limited to surveillance systems and their components.

B. Related sections

1. Where items specified in other Division 26 sections conflict with the requirements of this Section, the most stringent requirement shall govern.
    a. 26 05 26 – Grounding and Bonding for Communications
    b. 27 11 16 – Data Racks and Enclosures
    c. 27 15 13 – Copper Telecommunications/Data Cabling and Devices
    d. 27 15 23 – Fiber Optic Telecommunications/Data Cabling and Devices
    e. 27 15 33 – Video Distribution
2. The requirements of this Section apply to all Division 26 work, as applicable.
3. Consult all other sections, determine the extent and character of related work and properly coordinate work specified herein with that specified elsewhere to produce a complete installation.

1.2 SYSTEM DESCRIPTION

A. Install a CCTV system that provides video surveillance of the facility.

B. Install a digital recording system (DVR) that shall provide high quality images that can be utilized in the identification of persons in designated areas. The DVR shall allow reviewing, control and storage over a standard LAN/WAN network.

C. Install high-resolution colors cameras with high speed pan, tilt and zoom functions where specified.

D. Provide camera position programming and remote control of all camera functions.

1.3 SUBMITTALS

A. Submit manufacturer’s data for materials specified within this Section in accordance to Section 26 05 00.

B. Operating, maintenance and instruction manuals shall be furnished in accordance with General Conditions and Section 26 05 00.

C. Operating instruction manuals outlining the step-by-step procedures required for system start-up and operation shall be furnished. The instructions shall include manufacturer’s name, model number, service manual parts list, and brief description of all equipment and their basic operating features.

D. Maintenance instruction manuals outlining maintenance procedures shall be furnished. The manual shall include a troubleshooting guide listing possible breakdowns and repairs and a simplified connection wiring diagram for the system as installed.

1.4 QUALITY ASSURANCE

A. All materials, equipment and parts comprising the materials specified herein shall be new and unused, bearing UL labels where applicable.

1.5 DELIVERY, STORAGE AND HANDLING

A. Handle carefully to avoid damage to internal components, enclosure and finish.

B. Store in a clean, dry environment. Maintain factory packaging and, if required, provide an additional cover to protect enclosure in harsh environments.

1.6 WARRANTY

A. Furnish guarantee in accordance with and in form required under Section 26 05 00.

1.7 SYSTEM STARTUP

A. Refer to manufacturer's documentation to start-up procedures and requirements.

B. The Contractor shall demonstrate the system functionality to manufacturer's specifications and requirements after completion of installation.

PART 2 -PRODUCTS

2.1 DIGITAL VIDEO RECORDER

A. Manufacturer

1. Pelco DX8000 series or approved equal.

B. The digital video recorder (DVR) shall provide a high-quality recorder capable of storage and playback of images from 1 to 16 camera inputs at a simultaneous refreshing recording rate of up to 480 images per second (NTSC) at CIF resolution with a CD-RW as standard equipment. The DVR shall possess a watchdog system, triplex operation, Windows 2000 operating system with Service Pack 4 with the latest security updates from Microsoft, watermarking of each frame, inputs for external alarms, video motion detection, and scheduled event recording. Remote software shall be provided for operation via PC, web, and Pocket PC handheld devices.

C. The DVR shall meet or exceed the following design and performance specifications:

1. Processor

a. Processing Unit: Intel Pentium 4, 2.8 GHz processor with 256 MB of Ram

b. Recording Modes: Continuous, motion detection, alarm activation, or scheduled recording

c. Storage: Hard drive with 80, 250, 500, 750, or 1,000 GB of storage

d. Operating Software: Windows 2000, Service Pack 4

e. Signal Format: NTSC/PAL

f. Resolution:

1) NTSC: 320 x 240, 640 x 240, 640 x 480, 720 x 240, or 720 x 480 pixels, depending on model

2) PAL: 352 x 288, 704 x 288, 704 x 576, 720 x 288, or 720 x 576 pixels, depending on model

g. Frame Rate: NTSC/PAL

1) CIF: 480 ips/400 ips

2) 2CIF: 112 ips/96 ips

3) 4CIF: 80 ips/64 ips

h. Functions: Operate as a recorder and a full-duplex multiplexer

i. PTZ Control: Pan, tilt, and zoom functions via RS-422 communications (D, P, and Coaxitron□ protocols)

j. Viewing/Recording: Configurations of full screen, 4, 9, 12, or 16 cameras, or custom-designed display views

k. Full-Triplex Operation: Simultaneous playback and live viewing while recording live images

l. Programmable Schedules: 24 individual schedules

m. Program Modes: Motion event, alarm input, or continuous recording

n. Hardware Watchdog System: A hardware device to monitor the system clock for Windows lockup; upon lockup of the system the recorder shall automatically reboot without losing any of the programmed settings

o. Password Protection: Four user levels of protection for setup functions, operation, and system exiting

p. Motion Detection: Built-in motion detection for each camera to start recording or to increase the recording rate of the system

q. Motion Areas: Selectable detection area and sensitivity for each camera

r. Languages: English, Spanish, German, French, Italian, and Portuguese

s. Alarm/Motion Activation: Alarm input will start the unit recording, or if already recording, increase the recording rate and image quality

t. Pre-Alarm or Pre-Motion Recording: Record images for up to 60 seconds before the alarm sensor has been activated

u. Bandwidth Throttling: Network throttling of transmitted video

v. Alarm History Log: Available through a query

w. Alarm Outputs: Sixteen dry contact alarm outputs to activate external devices

x. Motion Activation: When a unit is in scheduled time recording and a camera detects motion or an alarm is activated, the system shall begin recording the event

y. Remote Control: Full remote control operation of pan, tilt, and zoom functions via TCP/IP protocol and RS-422 interface

z. LAN/WAN Connection: Software and hardware provided for viewing and controlling DVR over the network

aa. Video Quality: High-quality video recording of at least VHS grade compared to the original video; supports NTSC or PAL video

bb. Color Palettes: Minimum of 16 million color palettes

cc. Gray Scale: 256 shades

dd. Backup: A backup management system is to be provided to back up data to external devices (CD or other storage devices) without interrupting hard disk recording

ee. Hard Disk Drives: From 80 GB up to 1TB

ff. Programming: On-screen programming and operation through a PC keyboard or PS/2 mouse.

gg. Digital Zoom: Digital zoom of the image on the screen during playback modes

hh. Authentication: Software provided for image verification of each image recorded

2. Mechanical:

a. Mounting: Capable of being mounted in an EIA-standard 19-inch rack or placed on a shelf or desktop

b. Connectors:

1) Depending on model, eight or sixteen BNC video inputs plus eight or sixteen looping video outputs with automatic termination

2) Two 9-pin, D-type connectors for COM 1 and COM 2 ports (disabled)

3) Two 6-pin, mini-DIN connectors for a PS/2 mouse and keyboard
4) One 15-pin, D-type port for a PC monitor connection
5) One 25-pin D-type port for Printer connection
6) One S-video jack for analog monitor output (disabled)
7) Two multiplexed analog video outputs (optional)
8) One RJ-45 connector for network connection
9) Four RJ-45 ports for RS485/RS422 support
10) Depending on model, eight or sixteen push-in connectors for alarm inputs and eight or sixteen push-in connectors for relay outputs
11) Six high-speed USB 2.0 ports

c. Dimensions:
1) Desk Mount: 7.0 (H) x 17 (W) x 19.9 (D) inches (17.78 x 43.18 x 50.55 cm)
2) Rack Mount: 7.0 (H) x 19.0 (W) x 22.0 (D) inches (17.78 x 48.26 x 55.88 cm)

d. Operating Temperature: 50°F to 95°F (10° to 35°C)
e. Relative Humidity: Maximum 80% non-condensing
f. Optical Drive: CD-RW

3. Electrical:
a. Input Voltage: 100-240Vac, 50/60Hz, autoranging

D. Remote client requirements:
1. Recommended PC Requirements
a. Processor: Pentium III or 4, or AMD Athlon with 800 MHz minimum processor speed
b. Memory: 128 MB of RAM
c. Video Card: AGP VGA with minimum of 64 MB of video RAM
d. Resolution: 1024 x 768 display, 32-bit color, and DirectX 8.1 or better
e. Monitor: SVGA or XVGA with minimum of 1024 x 768 resolution
f. Operating System: Windows 2000 (SP4) and Windows XP, DirectX 8.1 or better
g. Internet Explorer: 5.5 or later
h. Disk Space: 500 MB of free space

2.2 INTEGRATED CCTV CAMERA AND DOME ENCLOSURE

A. Manufacturer
1. In-ceiling mount: Pelco ICS100 series or approved equal.
2. Surface mount: Pelco ICS150 series or approved equal.

B. The integrated CCTV camera and enclosure shall consist of a tamper/impact resistant, mountable dome enclosure with integrated fixed camera and lens. The integrated camera and lens shall consist of a camera and lens module that is packaged separately for shipment and which shall allow the installation of the enclosure to precede installation of the camera and lens.

C. Tamper/impact resistant dome enclosure
1. General
a. The enclosure shall be easy to install, requiring only standard tools.

b. Tamper resistant, pin-in-hex screws and tightening tool shall be provided to secure the cover assembly to the enclosure body.

c. The dome shall consist of 3.75-inch diameter, 0.125-inch thick polycarbonate high security bubble that has high optical clarity and nominal distortion at all camera angles.

d. The bubble shall be puncture-proof, capable of withstanding pointed impact forces of 35 foot-pounds without creating an internal depression greater than 0.2 inches.

e. The bubble shall be impact resistant; capable of withstanding repeated multiple blunt impact forces up to 100 foot-pounds.

f. The dome shall be available in clear or smoked versions. The smoked version shall have a maximum light loss not greater than 1.5 f-stops.

g. The enclosure shall be NEMA 4 and IP 66 rated, when installed.

h. The enclosure, when loaded with camera and integrated low temperature resistor array, shall be capable of operation down to –50°F and de-icing the viewing surface of the enclosure down to -10°F.

i. The enclosure shall be provided with an adapter plate for mounting to a standard 4 square or double-gang electrical box.

j. A clearly labeled pigtail shall be provided for connecting 12Vdc or 24Vac power.

k. A male pigtail BNC connector shall be provided for connecting video.

l. The enclosure, when loaded with camera and integrated low temperature resistor array shall consume:

1) Less than 2 watts of power at temperatures above 35°F.

2) No more than 13 watts of power at temperatures under 35°F.

m. The enclosure, when installed, shall have no exposed cables.

2. Surface mounted models

a. The enclosure shall be capable of connection to 3/4-inch NPT threaded conduit from the side, or to a 3/4-inch conduit adapter from the rear of the enclosure.

3. In-ceiling mounted models

a. The enclosure backbox, when installed, shall not require more than 1.75 inches of space inside a wall or ceiling.

b. The enclosure shall be suitable for use in environmental air handling spaces.

D. The integrated camera and lens assembly shall consist of a charge-coupled device (CCD) camera with fixed focal length or varifocal lens that is mounted as an easily installable/removable module.

1. The CCD camera shall consist of either a 1/4-inch or 1/3-inch format interline transfer imager meeting NTSC (EIA) or PAL (CCIR) signal format specifications.

2. The cameras shall be available in either standard resolution monochrome capable of 420 TV lines of horizontal resolution, standard resolution color capable of 350 TV lines of horizontal resolution, or high resolution color capable of 470 lines of horizontal resolution.

3. The fixed focal length lenses available shall be 2.9mm, 6mm, 8mm, or 12mm. All cameras with fixed focal length lenses shall utilize 1/3-inch CCD imagers.

4. The high resolution color camera shall be available with a 2.6mm to 5.6mm varifocal length lens with on/off DIP switch for auto iris capability. This camera shall utilize a 1/4-inch CCD imager.

5. All cameras, including the 1/4-inch CCD with varifocal lens, shall be capable of electronic light control, commonly referred to as electronic shutter.

6. All color cameras shall be 2:1 interlace and capable of AC line lock that is adjustable via potentiometer on the camera board.

7. A jumper shall be provided on the power supply board for configuring to either 12Vdc or 24Vac power.
8. All cameras shall be protected from incorrect placement of the 12Vdc/24Vac jumper.

E. The camera module shall meet or exceed the following design and performance specifications:

1. The camera module shall have two spring steel, compressible arms that create an interference fit that holds the module in place.
2. During installation and camera adjustment, the module design shall allow adjustment of the camera on three axes to allow maximum flexibility during scene adjustment.
3. The three axes shall be pan, tilt, and rotation.
4. The camera and lens, when installed on a ceiling or horizontal surface, shall be capable of 360° of pan and no less than 70° of tilt. When field of view is factored, apparent tilt shall be no less than 90°.
5. The camera and lens, when installed on a wall or vertical surface, shall be capable of 180° of pan and no less than 140° of tilt.
6. The camera module shall consist of the camera, lens, low temperature array, and 24Vac power supply board.
7. The camera module shall be easy to install by being provided with a quick connect/disconnect connector.
8. The removable camera module shall allow unrestricted access to the inside of the enclosure during installation of the enclosure.

2.3 VIDEO TRANSMISSION

A. Fiber optic video transmitter

1. Manufacturer
   a. IFS VT1001 series or approved equal
2. General
   a. The video transmitter shall provide dual independent video signal transmission, capable of transmitting full color video in real time in NTSC, PAL or SECAM formats.

CONFORMED

SECTION 28 31 00

FIRE ALARM SYSTEM

PART 1 – GENERAL

1.1 SUMMARY

A. Section includes

1. Furnish and install low voltage automatic or manual type fire detection systems as shown on Drawings and/or specified herein, together with all miscellaneous items of labor, engineering, design and materials necessary for proper operation, testing and control of system for complete and operating systems. Any omission in specified equipment will not relieve the Contractor of the responsibility for furnishing fully operational systems.

B. Related work under this section

1. Where items specified in other Division 26 sections conflict with the requirements of this Section, the most stringent requirement shall govern.
    a. 26 05 26 – Grounding and Bonding for Communications
    b. 26 05 33 – Raceway and Boxes
2. The requirements of this Section apply to all Division 26 work, as applicable.
3. Consult all other sections, determine the extent and character of related work and properly coordinate work specified herein with that specified elsewhere to produce a complete installation.
4. Items specified under another Division with connections specified under this Section:
    a. Elevator controller for recall.
    b. Door hold-open/closure devices without integral smoke detectors.
    c. Fire barrier roll-down doors and shutters.
    d. Fire sprinkler alarm system flow switches, valve monitors and post indicating valves.
    e. Fire/smoke dampers.
    f. HVAC shut-down via relay.

1.2 REFERENCES

A. Comply with the latest edition of the following applicable specifications and standards except as otherwise shown or specified:

1. California Codes of Regulations
    a. Part 2 -California Building Code (CBC); ICBO Uniform Building Code (UBC) with California amendments
    b. Part 3 -California Electrical Code(CEC); NFPA 70 National Electrical Code (NEC) with California amendments
    c. Part 4 -California Mechanical Code (MEC); IAPMO Uniform Mechanical Code (UMC) with California amendments
    d. Part 7 -California Elevator Safety Construction Code
    e. Part 9 -California Fire Code; WFCA Uniform Fire Code (UFC) with California amendments
2. NECA –National Electrical Contractors Association
    a. 305; Standard for Fire Alarm System Job Practices
3. NFPA –National Fire Protection Association
    a. 13; Sprinkler Alarm and Supervision

b. 72; National Fire Alarm Code

c. 90A; Installation of Air Conditioning & Ventilating Systems

d. 101; Life Safety Code

4. UL -Underwriter's Laboratories, Inc.

a. 38; Standard for Manual Signaling Boxes for Fire Alarm Systems

b. 228; Door Holders for Fire Protective Signal Systems

c. 268; Standard for Smoke Detectors for Fire Alarm Signaling Systems

d. 268A; Standard for Smoke Detectors for Duct Application

e. 346; Water-Flow Indicators for Fire Protective Signaling Systems

f. 464; Audible Signaling Appliances

g. 521; Heat Detectors for Fire Protective Signaling Systems

h. 864; Control Units for Fire Protective Signaling Systems

i. 1481; Power Supplies for Fire Protective Signaling Systems

j. 1635; Standard for Digital Alarm Communicator System Units

k. 1638; Standard for Visual Signaling Appliances - Private-Mode Emergency and General Utility Signaling

l. 1971; Signaling Devices for the Hearing-Impaired

1.3 SYSTEM DESCRIPTION

A. The fire alarm system shall be zone, non-coded addressable. It shall be 24Vdc closed circuit, electronically supervised, common signaling, device indicating, automatic alarm type; operating from manual pull stations, smoke detectors, heat detectors and sprinkler system switches. The system shall include all wiring, raceways, pullboxes, terminal cabinets, outlet and mounting boxes, control equipment, alarm and supervisory signal initiating devices, alarm notification devices and all other accessories required for a complete and operational system

B. Provide system with the following circuit functions:

1. Class B for initiating device circuits.

2. Style 4 for signal circuits.

3. Class B, Style Y for notification device circuits.

C. Activation of any alarm initiating device shall:

1. Cause all audible and visible evacuation alarm devices to sound and/or pulse throughout the system until silenced at the control panel or remote annunciator.

2. Release all associated door hold-open/closure devices, roll-down doors or shutters, and fire/smoke dampers.

3. Display individual addressable initiating device and/or zone number in alarm with a minimum of 80 character alphanumeric display.

4. Transmit alarm signal to remote monitoring station.

D. Activation of smoke detectors in elevator lobbies, shaft or equipment room shall cause elevators to be recalled to ground floor or alternate floor, if ground floor is in alarm.

E. Activation of heat detectors in elevator lobbies or equipment room shall cause the power service to elevator machine room equipment to be automatically disconnected.

F. Activation of duct smoke detectors in HVAC ducts shall shutdown associated mechanical equipment.

G. Activation of smoke detectors at fire/smoke dampers shall cause dampers to close and associated mechanical equipment shutdown.

H. System shall provide supervisory signals for the following:

1. System trouble, consisting of:

a. Removal of an initiating device from any circuit.

b. An open or ground fault in any circuit.

c. An open, short or ground fault in an annunciation circuit.

d. A ground fault on any DC voltage line.

e. Removal of system input, output or control modules.

f. Improper battery or charger condition.

2. Sprinkler valve monitor switch.

I. Failure of any circuit supervised by the control panel shall:

1. Cause trouble audible indicators to sound until silenced.

2. Cause the offending addressable device and/or zone to display at control panel and/or remote annunciator.

3. Transmit a trouble signal to remote monitoring station.

J. Failure of AC power shall:

1. Cause trouble audible indicators to sound until silenced.

2. Display condition at control panel and/or remote annunciator.

3. Cause automatic transfer to standby battery power; all system function shall be operational during AC power failure.

K. In addition to the above sequence of operation, the control panel shall perform the following functions:

1. Identify each addressable device by location, priority and device type.

2. Read and display at control panel and/or remote annunciator the sensitivity of addressable, programmable initiating devices.

3. Remain 100% operational and capable of responding to an alarm condition while in routine maintenance mode.

4. Be capable of supporting non-addressable devices as well as addressable devices.

5. Allow individual, programmable control of each connected remote or panel-mounted relays.

6. Change the status of configured circuits and relay status.

7. Generate an addressable detector sensitivity report providing a chamber voltage (device testing) for each detector.

1.4 SUBMITTALS

A. Submit manufacturer's data for materials specified within this Section in accordance to Section 26 05 00.

B. The system to be provided as approved by the fire authority having jurisdiction, and shall conform to the approved plans. Submittals are not required when conforming to the Drawings.

C. Operating, maintenance and instruction manuals shall be furnished in accordance with General Conditions and Section 26 05 00.

D. Operating instruction manuals outlining the step-by-step procedures required for system start-up and operation shall be furnished. The instructions shall include manufacturer's name, model number, service manual parts list, and brief description of all equipment and their basic operating features.

E. Maintenance instruction manuals outlining maintenance procedures shall be furnished. The manual shall include a troubleshooting guide listing possible breakdowns and repairs and a simplified connection wiring diagram for the system as installed.

F. Provide completes asbuilts indicating cable plan and device addresses of the entire fire alarm system.

G. Submit test reports in accordance to this Section.

1.5 QUALITY ASSURANCE

A. All materials, equipment and parts comprising the materials specified herein shall be new and unused.

B. The system and all components must have proper listing and/or approval from the following nationally recognized agencies:

1. UL Underwriters Laboratories Inc
2. FM Factory Mutual
3. CSFM California State Fire Marshal

C. Vendor/supplier qualifications

1. Equipment provided shall be by a manufacturer in business for not less than 10 years.
2. Shall have in-place support facilities within 150 miles of this project site with technical staff, spare parts, inventory and all necessary test and diagnostic equipment.
3. Shall be a manufacturer certified company with certified technicians to supervise installation, adjustments and tests of the system
4. Be an UL certified alarm company and UL certify the fire alarm system.

D. All final connections and programming shall be made by manufacturer's certified technicians.

1.6 DELIVERY, STORAGE AND HANDLING

A. Handle carefully to avoid damage to internal components, enclosure and finish.

B. Store in a clean, dry environment. Maintain factory packaging and, if required, provide an additional cover to protect enclosure in harsh environments.

1.7 WARRANTY

A. Furnish guarantee in accordance with and in form required under Section 26 05 00.

1.8 SYSTEM STARTUP

A. Upon completion of installation, a factory trained service representative shall perform initial start-up of the fire alarm system. Sufficient time shall be allowed to properly check system out and perform required minor adjustments prior to final testing and certification.

PART 2 – PRODUCTS

2.01 MANUFACTURERS

A. As shown on Drawings or approved equal.

2.02 CONTROL PANEL

A. System features/capability summary

1. The panel shall comply with applicable requirements of UL 864 and provide power, annunciation, supervision and control for the complete fire alarm system. The panel shall be modular in construction, installed in a steel cabinet with hinged door and cylinder lock, containing all modules necessary to operate as indicated herein.
2. Addressable devices shall be individually identified by the system and any quantity of addressable devices may be in alarm at any time up to the total number connected to the system.
3. The panel annunciator shall be a minimum of an 80 character alphanumeric display, which shall provide a user definable custom message associated with each detection device or zone.

4. The time delay between the activation of an initiating device and the automatic activation of local fire safety function shall not exceed 10 seconds.
5. Dynamic supervision of system electronics, wiring, initiating devices and software shall be provided by the control system. Failure of system hardware or wiring shall be indicated by type and location on the alphanumeric annunciator. Software and processor operation shall be monitoring by an independent hardware watchdog, which will indicate their failure. The panel shall provide failsafe operation, i.e. all incoming alarms shall override all other modes of operation.
6. Provide a service mode to permit the arming and disarming of individual initiating or output devices as well as manually operating output devices. Status of these devices shall be displayed upon the command from the control panel. The panel shall automatically return to normal mode in the event the panel remains unattended in the service mode.
7. The panel shall be capable of measuring and adjusting the sensitivity of addressable detectors upon request. An alphanumeric display shall be provided to display custom messages and give the readings of detector's sensitivity. Each device on an addressable initiating circuit shall be checked continuously to include the following:
    a. Sensitivity
    b. Response
    c. Opens
    d. Shorts
    e. Ground faults
    f. Functionality
    g. Status
8. The panel shall monitor the addressable smoke detectors in such a manner that if the detector becomes dirty, and reaches and maintain 80% of alarm threshold for 5 consecutive hours, a trouble condition indicating exactly which device needs service shall be automatically annunciated. If the device becomes too insensitive for a period of 10 seconds, the trouble indication will read: "Immediate maintenance required" or similar.
9. The panel shall report, by specific device number, any device removal from addressable initiating circuit and all other devices shall continue to function.
10. The panel shall automatically indicate the total quantity of alarms and troubles, which have occurred prior to reset at the control unit.
11. No alarm or trouble indication shall be re-settable until acknowledged. It shall not be possible to reset the system until all alarms have been acknowledged.
12. The panel shall be capable of:
    a. Counting the number of addressable devices with a designated area or "zone" which are in alarm.
    b. Counting "zones" which are in alarm.
    c. Counting number of addressable devices, which are in alarm on the system.
    d. Differentiating among types of addressable devices such as smoke detectors, manual stations, waterflow switches, heat detectors, etc.
    e. Assign priorities to types of devices, zones or groups of devices.
    f. Cross-zoning.
13. Each addressable device shall report its condition to the panel control unit every 3 seconds in a manner such that failure of the connections to or internal electronics of the device will result in a trouble signal that identifies the specific device involved.
14. The panel shall also be capable of operating non-addressable Class A or B initiating.

15. Alarm and trouble from non-addressable initiating circuits (zones) shall be annunciated and cause output functions in the same manner as addressable detection devices including a location message for each zone.
16. Panel output circuits shall be supervised and capable of providing 1.5A at 24Vdc minimum.
17. Provision for programmable control relays in the panel shall be included having dry contacts rated at 5A, 120Vac.
18. Programmable remote relays shall be controlled in the same manner as panel mounted relays.

B. Initiating and notification modules

1. All modules shall be plug-in, dynamically supervised and easily replaceable. Field wiring shall be connected to the panel with removable multi-conductor connectors to facilitate rapid removal and replacement of both the modules and wiring for ease of service. The modules shall be system interconnected by a card edge connector.
2. Provide zone input addressable modules for monitoring non-addressable initiating circuits.
3. Provide programmable signal modules on output circuits for operation notification devices.
4. Provide, as needed, programmable supplementary relay modules containing four independent relays fitted with form “C” contacts, rated at 5A, 120Vac.

C. Power supply

1. Adequate to serve the control panels various modules and devices connected to the system. Power supplies shall be both internal and remote to the control panel as required. All power connections whether AC or DC shall be separately fused within panel.

D. Storage batteries

1. Shall be provided and shall be sealed, nickel-cadmium types. The batteries shall have ample capacity with primary power disconnected to operate the system as required by NFPA 72. Following this period of operation via batteries, the batteries shall have ample capacity to operate all system components, including notification devices on the panel for a period of 5 minutes. Battery cabinet shall be a separate compartment within the control panel or battery cabinet with steel cabinet and hinged door with cylinder lock.

E. Battery charger

1. Provide an automatic dual rate (high rate and float charge) battery charger capable of recharging batteries to 80% capacity within 8 hours. The charger output shall be supervised and fused. A pilot light indicating when batteries are manually placed on a high rate of charge as part of the unit assembly, if a high rate switch is provided. Charger shall be located with control panel or battery cabinet.

2.03 INITIATING DEVICES

A. General

1. Addressable devices shall be connected onto addressable initiating circuits and be capable of field programming for its “address” location on the initiating circuit.
2. Devices shall have screw terminal for terminal of each conductor.
3. Devices shall be dynamically supervised and individually identified (when addressable) from the control panel.

B. Manual pull stations

1. Shall conform to applicable requirements of UL38.
2. Stations shall be single action type, finished in red, with raised letter operating instructions of action type.
3. A key shall be required to reset the station.

C. Heat detectors

1. Shall conform to applicable requirements of UL521.
2. Detector shall be of electronic design for detection of fire by fixed temperature and/or rate-of-rise principle.
3. All electronics shall be contained within detector head and plug to a terminal base.
4. Detector shall be sensitivity adjustable from the control panel.

D. Smoke detectors

1. General
   a. Shall conform to applicable requirements of UL268.
2. Photoelectric detector
   a. Detector shall be of electronic design for detection of abnormal smoke densities.
   b. Detector shall utilize a LED & light sensing photodiode within a chamber to monitor light dissipation and reflections. Long term changes caused by environmental conditions shall be automatically compensated.
   c. All electronics shall be contained within detector head and plug to a terminal base.
   d. Detector shall have multiple sensitivity adjustment levels from the control panel.
3. Ionization detector
   a. Detector shall be of electronic design for detection of products of combustion.
   b. Detector shall utilize self-compensating dual ionization chambers. Long term changes caused by environmental conditions shall be automatically compensated.
   c. Detector shall be sensitivity adjustable from the control panel.
4. Duct smoke detector
   a. Detector shall have a duct housing, mount exterior to the duct and sampling tube.
   b. Detector type shall be per Drawing and rated for the air velocity to be expected.
5. Linear beam detector
   a. Detector shall be of electronic design for detection of abnormal smoke densities.
   b. Detector shall utilize an integrated infra-red transmitter and receiver. A passive reflector unit shall redirect beam as necessary to obtain required coverage.
   c. Detector shall have multiple sensitivity adjustment levels from the control panel.

E. Interface modules

1. Addressable module shall be used for interfacing normally open or normally closed direct shorting contact devices onto addressable initiating circuit.

F. Programmable relay modules

1. Addressable module containing a programmable control relay with contacts rated at 2.0A at 30Vdc and 0.6A at 120Vac, minimum.

2.04 NOTIFICATION DEVICES

A. These units shall be flush mounted where possible in all finished locations. All units shall be red in color unless otherwise noted.

B. Audible, visual and audible/visual units

1. All units shall be UL and CSFM listed for the application and location shown on Drawing.
2. Horns
   a. The horn shall be listed per UL 1480.

b. The audible portion of the appliance shall have a minimum of three (3) field selectable settings for dBA levels, and the anechoic sound pressure measurement on Temporal (Code 3) setting shall be 87 dBA minimum at 24VDC.

3. Horn/strobes

a. The horn shall be listed per UL 1480 and strobe shall be of low current design with candela ratings per UL 1971.

b. The audible portion of the appliance shall have a minimum of three (3) field selectable settings for dBA levels, and the anechoic sound pressure measurement on Temporal (Code 3) setting shall be 87 dBA minimum at 24VDC.

c. Produce a flash rate of one flash per second over the regulated voltage range and shall incorporate a xenon flashtube enclosed in a rugged Lexan® lens.

4. Speakers

a. The speaker shall be listed per UL 1480, and designed for a field selectable input of either 25 or 70 Vdc RMS, with selectable power taps from 1/8 watt to 2 watts.

b. All models shall have listed sound output of up to 89 dBA at 10 feet and a listed frequency response of 400 to 4000 Hz.

5. Speaker/strobes

a. The speaker shall be listed per UL 1480, and designed for a field selectable input of either 25 or 70 Vdc RMS, with selectable power taps from 1/8 watt to 2 watts.

b. All models shall have listed sound output of up to 89 dBA at 10 feet and a listed frequency response of 400 to 4000 Hz.

c. Strobe shall be of low current design with candela ratings per UL 1971.

d. Produce a flash rate of one flash per second over the regulated voltage range and shall incorporate a xenon flashtube enclosed in a rugged Lexan® lens.

6. Strobes

a. Strobe shall be of low current design with candela ratings per UL 1971.

b. Produce a flash rate of one flash per second over the regulated voltage range and shall incorporate a xenon flashtube enclosed in a rugged Lexan® lens.

C. Remote power supplies

1. Shall be mounted within a hinged NEMA 1 enclosure with locking door.

2. The power supplies shall be activated by a supervised relay from control panel or remote mounted, addressable relay module.

3. Backup power shall be required such that loss of utility power shall not cause the system operator to be required to restart the system or any part thereof upon return of power. The backup power supply shall be listed for life safety applications and provide sufficient operation based upon maximum connected load as required by NFPA 72.

4. Provide an automatic dual rate (high rate and float charge) battery charger capable of recharging batteries to 80% capacity within 8 hours. The charger output shall be supervised and fused.

5. A solid-state power transfer circuit shall switch to standby power automatically and instantaneously if normal power fails or falls below 15% of normal. This electronic circuit shall allow the batteries to be effectively “floated” on the operating system to avoid upsetting the normal microprocessor scan and minimize resultant nuisance troubles and/or alarms.

D. Synchronization modules

1. Module shall be connected to the notification circuits and used to synchronize the flash rate of strobe devices where required by NFPA 72. Synchronization shall match Code 3 temporal pattern with a flash rate of 1Hz.

2.05 AUXILARY EQUIPMENT AND SUPERVISION

A. Under this Section provide connections to the following equipment to activate control sequence of operation.

1. Fire sprinkler system components

a. Provide supervised relay interface whether remote mounted, addressable interface module or control panel auxiliary relay for each of the following devices:

1) Each waterflow switch to initiate an alarm signal.

2) Each valve monitor switch to initiate an trouble signal.

2. Elevator controller(s)

a. Provide set(s) of programmable dry contacts from the control panel or remote mounted, addressable relay module to elevator controller(s) for each of the following:

1) Elevator recall to ground floor.

2) Elevator recall to alternate floor designated by fire marshal.

3. Door hold-open/closure devices

a. Provide a set of programmable dry contacts from the control panel or remote mounted, addressable relay module to each device for activation.

4. Roll-down fire doors and shutters

a. Provide a set of programmable dry contacts from the control panel or remote mounted, addressable relay module to each device for activation.

5. Fire/smoke dampers

a. Provide a set of programmable dry contacts from the control panel or remote mounted, addressable relay module to each damper for activation and shut-down of associated HVAC unit.

6. HVAC equipment

a. Provide a set of programmable dry contacts from the control panel or remote mounted, addressable relay module to HVAC unit control wiring for automatic shutdown.

2.06 VOICE COMMUNICATION SYSTEM

A. System operation

1. Provide a modular, fully supervised, zone selective zone communication system. The page alarm system shall be utilized for automatic pre-recorded voice signaling and manual voice override paging.

2. All zone selector switches shall be toggle or membrane type with adjacent ON/OFF LED light and clearly identified by zone.

3. Manual override via the hand-held microphone shall take priority over any and all alarm signals to assure communication of one-way voice instructions.

B. Communication amplifiers

1. The unit shall be solid state complete with microphone and volume control.

2. The total harmonic distortion shall be less than 2% at 100% of rated output.

3. Outputs shall be compatible with multi-tap speakers as required.

4. Electronic circuit protection shall be incorporated in the amplifier that provides automatic limiting against short circuits and overloads on its output. A thermostatic control shall protect the amplifier from operation at excessive temperatures and a circuit breaker for overcurrent protection shall be provided.

5. The front panel of the amplifier shall have a power and thermal overload indicators.

6. The amplifier shall be supervised and provide a trouble signal to control panel.

7. The amplifier shall operate from a 105-125Vac, 60Hz power source.
8. The unit shall be ruggedly constructed, temperature stable and capable of operating in ambient temperatures ranging from -20°C to +55°C. The power transformer shall be heavy duty, fully enclosed and designed for continuous operation. The chassis shall be heavy-gauge steel with a perforated enclosure and both shall be finished in enamel paint.
9. Provide speaker zone supervision such that any zone in "trouble" shall be annunciated at the control panel or remote annunciator.
10. Amplifier shall be of wattage shown at either 25 or 70 Vdc RMS output voltage levels. Amplifier shall be continuously supervised and be configured for single channel operation and redundancy for backup. All amplifiers shall have a 60Hz to 15kHz frequency response and be equipped with a battery saver feature to minimize supervisory current drain when operating on standby batteries.
11. Each speaker circuit shall be electrically supervised for opens and ground faults in the wiring, and for short circuit faults on the speaker circuit wiring, and shall be so arranged that a fault condition in any circuit or groups of circuit will not cause an alarm to be sounded. A short circuit on the speaker circuit wiring will automatically disconnect only the affected circuit thereby insuring the integrity of all other speaker circuits to receive an alarm signal and protect the system amplifier, pre-amplifiers and taped voice or tone generators. The occurrence of any fault will light a trouble LED and sound the local buzzer, but will not interfere with the proper operation of any circuit which does not have a fault condition. Initiating and speaker circuits shall be wired using Class B supervised circuits.
12. Digital message repeater (DRM) module shall be provided for a pre-recorded general instruction message. The standard operating sequence shall 30 seconds of alarm tone, followed by a 20 second digitized general instruction message. After the message is sent, or interrupted by the hand-held microphone before the prerecorded message is completed or failure of the DRM, the alarm tone will again sound continuously until the system is reset or the tone silenced. The DRM will be supervised for EPROM memory and general status. Message shall be settable to be continuous repeatable or 1 to 3 times.
13. Redundant tone generators (RTM) shall be provided for alarm and auxiliary tone generation (slow whoop). RTM shall be continuously supervised for operation and placement.

C. Remote switch bank and microphone panel

1. Provide push-to-talk override microphone for fire alarm paging.
2. A bank of switches shall be provided within reach of the microphone for selective paging of each zone and all call function.
3. Provide a means for each toggle or membrane switch to accept an identification tag in the faceplate. Provide laminated graphic tag; hand lettering is not acceptable.

D. Backup power supply (Batteries)

1. Provide a backup power source for all system components including but not limited to, amplifiers, DRM, RTM and microphone circuits.
2. Backup power shall be required such that loss of utility power shall not cause the system operator to be required to restart the system or any part thereof upon return of power. The backup power supply shall be listed for life safety applications and provide sufficient operation based upon maximum connected load as required by NFPA 72.
3. Provide an automatic dual rate (high rate and float charge) battery charger capable of recharging batteries to 80% capacity within 8 hours. The charger output shall be supervised and fused.
4. If the system loses AC power, a system trouble shall occur.
5. A solid-state power transfer circuit shall switch to standby power automatically and instantaneously if normal power fails or falls below 15% of normal. This electronic circuit shall allow the batteries to be effectively "floated" on the operating system to avoid upsetting the normal microprocessor scan and minimize resultant nuisance troubles and/or alarms.

PART 3 – EXECUTION

3.01 INSTALLATION

A. Work shall be installed as shown on the Drawings in accordance with the manufacturer's diagrams and recommendations, except where otherwise indicated.

B. The AC circuit(s) supplying required power to system components shall be connected as shown on Drawings. Circuit breaker shall be indicated by the color red and labeled as "FIRE ALARM CIRCUIT".

C. Raceway and related infrastructure

1. Wiring for systems shall be installed in rigid metal conduit, intermediate metallic conduit or electric metallic tubing as specified in Section 26 05 33.
2. Control panel(s) and cabinets(s) shall be mounted with sufficient clearance for observation and testing.
3. All fire alarm junction boxes must be clearly marked for distinct identification.
4. A 3/4" empty conduit from control panel to the nearest telephone closet shall be provided. Ample gutter space at control panel to accommodate all necessary wiring shall be provided as required.

D. Cabling requirements

1. Conductors for fire alarm system shall not be installed in lighting and power conduits, junction boxes, or outlet boxes.
2. External wiring between control panel and stations and horns shall connect to terminal strips in accessible locked cabinets. Connection to terminal strips shall be made with terminal spade lugs or with approved type terminal blocks.
3. All wiring shall be run in continuous lengths between terminal cabinets to equipment, no splicing permitted.
4. All notification appliance circuit wiring shall be color coded; solid copper, 600 volts, UL approved for fire alarm use; minimum size, #16 AWG for detector circuit and #14 AWG for alarm circuits unless specified otherwise. All detector and alarm wires shall be per manufacturer requirements and shall be identified with E-Z Code or Brady wire markers by zones, or equivalent, at each junction box, detector outlet, pull station, horn, and master terminals.
5. All final connections to panel and devices shall be made by manufacturer's certified technicians.

E. Fire alarm devices requirements

1. All devices shall be installed in accordance with the applicable listing requirements. Locations and equipment shall be as indicated on the approved Drawings.
2. Detectors shall be installed in accordance with NFPA 72 and the manufacturer's written instructions in areas as indicated on Drawings.
3. Do not locate detectors in direct air stream from supply air outlets. Install 48" minimum from air register.
4. Provide access doors as required in ceilings where detectors is within attic or concealed space. Provide laminated engraved nameplate with white letters on yellow background attached to door. To read "FIRE ALARM DETECTOR LOCATED ABOVE CEILING". On lay-in ceilings provide nameplate on ceiling tile directly below detector.

3.02 FIELD QUALITY CONTROL

A. Notify the Engineer 30 days before performance and acceptance tests are to be conducted. Perform tests in the presence of Architect, Engineer and/or local Fire Marshal or his authorized representative, and the Inspector of Record. Furnish all instruments and personnel required for tests. Conduct tests for following:

1. Verify that the system is free of grounds or open circuits. The central control board shall indicate when a ground or open circuit exists.
2. Verify that horns, stations, transmitters, automatic detectors and supervisory devices are functioning as specified. Criteria for testing shall be as follows:
   a. Stations shall close the circuits specified and deliver specified alarm signal.
   b. Automatic detectors shall actuate the specified zones when the appropriate fire or smoke conditions are generated.
   c. Panels and supervisory devices shall display and control functions as specified.

B. Performed under the supervision of qualified manufacturer's representative.

C. Re-conducted tests to verify correction of any defect found in initial testing.

D. Upon completion of detector installation and system tests, certified technician shall submit 3 copies of written report on manufacturer's inspection and test forms to indicate system has been fully tested in supervision, trouble and alarm modes, and is fully operational conforming to letter of these Specifications.

E. Test report shall contain, but is not limited to, the following:
1. Technician's name, certificate number, and date.
2. A complete test of equipment installed and wired.
3. Indication that all equipment is properly installed.
4. Tests of individual zones as applicable.
5. Serial numbers, locations by zone and model number for each installed detector.
6. Voltage sensitivity settings for each ionization detector as measured in place with the air conditioning system operating.

F. After completion of all tests and adjustments listed above, Contractor shall submit following information to Engineer:
1. As-built conduit layout diagrams including wire color code and/or tag number.
2. Complete as-built wiring diagrams on manufacturer's title block with all device addresses.
3. Detailed catalog data on all installed system components.
4. Operation and maintenance manuals, 4 copies.
5. Copy of technician's certified report (as above).
6. Written certification by manufacturer stating that system and its component parts are as listed and approved by California State Fire Marshal and that installation conforms in all respects to requirements of applicable California Codes.

G. Provide phenolic nameplate labels for all equipment cabinets, terminal cabinets, and devices (initiating, notification and remote modules) as programmed at fire control panel and recorded within shop drawings. Cabinet nameplate to be mechanically fastened, and devices (initiating, notification and remote modules) to be adhesively fastened to nearest wall, ceiling, or device surface wherever possible. Nameplate shall be 3/8" high minimum white lettering on a red background.

3.03 ADJUSTING

A. Calibrate and adjust all detectors to manufacturer's standards in place and under dynamic field operating conditions using testing equipment built by manufacturer specifically for this purpose.

3.04 DEMONSTRATION

A. Contractor shall include a minimum of 8 hours of instruction in operation of system by a manufacturer's factory authorized representative to Owner.

END OF SECTION

CONFORMED

SECTION 31 1100

CLEARING AND GRUBBING

PART 1 GENERAL

1.1 SUMMARY

A. Section Includes:
   1. Removal of surface debris, paving, curbs, and sidewalks.
   2. Removal of plant life and grass.
   3. Grubbing roots.
   4. Topsoil excavation.

B. Related Sections:
   1. Division 01: Administrative, procedural, and temporary work requirements.
   2. Section 31 2200 - Grading.

PART 2 PRODUCTS

Not used

PART 3 EXECUTION

3.1 SITE CLEARING

A. Remove vegetation, debris, and obstructions from areas of walks, paving, lawns, and planting beds.

B. Apply herbicide to remaining stumps and plant life to inhibit growth.

C. Strip existing topsoil from areas of structures, walks, and paving. Remove from site.

D. Grub out roots and underground obstructions to minimum depth of 12 inches.

E. Remove waste material from site as it accumulates. Comply with applicable codes and ordinances regarding waste transportation and disposal.

END OF SECTION

CONFORMED

SECTION 31 2200

GRADING

PART 1 GENERAL

1.1 SUMMARY

A. Section Includes:
   1. Cutting and grading of site.
   2. Topsoil placement.

B. Related Sections:
   1. Division 01: Administrative, procedural, and temporary work requirements.
   2. Section 31 1100 - Clearing and Grubbing.

PART 2 PRODUCTS

2.1 MATERIALS

A. Topsoil:
   1. Stockpiled on site material, specified in Section 31 1100, supplemented by off-site material if required.
   2. Off site materials: Natural friable loam of region, free of clay, toxic substances, large or matted roots, debris, excess weeds, and rocks over 1 inch in any dimension, with acidity range of 5.5 to 7.5.

PART 3 EXECUTION

3.1 CUTTING AND GRADING

A. Excavate subsoil to permit placement of structures, paving, and site improvements, and from areas to be re-graded.

B. Uniformly grade areas to smooth surface at required grades and elevations. Adjust contours to eliminate water ponding and provide positive drainage. Make grade changes gradually. Blend slopes into level areas.

C. Leave areas to receive topsoil 4 inches below final required grade.

D. Leave areas to receive planting beds 2 inches below final required grade.

E. Leave areas to receive turf 1 inch below final required grade.

F. Tolerances: Within plus or minus 1 inch of required subgrade elevation.

3.2 TOPSOIL PLACEMENT

A. Place topsoil to 4 inch depth over areas modified by work of this Contract that are not covered by planting beds, structures or paving.

B. Uniformly distribute to required grades; feather back to where grades remain unchanged.

C. Uniformly grade areas to smooth surface at required grades and elevations. Adjust contours to eliminate water ponding and provide positive drainage. Make grade changes gradually. Blend slopes into level areas.

CONFORMED

D. Remove rubbish, debris, vegetation, and concentrations of rocks. Rake areas smooth; leave suitable for seeding or sodding.

3.3 CLEANING

A. Remove surplus materials and those not suitable for reuse from site.

3.4 PROTECTION

A. Protect graded areas from traffic and erosion; keep free of trash and debris.

B. Repair settled, eroded, or rutted areas.

END OF SECTION

CONFORMED

SECTION 31 2300

EXCAVATION AND FILL

PART 1 GENERAL

1.1 SUMMARY

A. Section Includes:
1. Excavating for structures and site components.
2. Filling.
3. Trenching.
4. Backfilling.

B. Related Sections:
1. Division 01: Administrative, procedural, and temporary work requirements.

1.2 REFERENCES

A. ASTM International (ASTM):
1. C136 - Standard Test Method for Sieve Analysis of Fine and Coarse Aggregates.
2. D698 - Standard Test Methods for Laboratory Compaction Characteristics of Soil Using Standard Effort (12,400 ft-lbf/ft^3) (600 kN-m/m^3).
3. D1557 - Standard Test Methods for Laboratory Compaction Characteristics of Soil Using Modified Effort (56,000 ft-lbf/ft^3) (2,700 kN-m/m^3).
4. D2487 - Standard Classification of Soils for Engineering Purposes.
5. D2922 - Standard Test Methods for Density of Soil and Soil Aggregate in Place by Nuclear Methods (Shallow Depth).
6. D4254 - Standard Test Methods for Minimum Index Density of Soils and Calculation of Relative Density.
7. D4318 - Standard Test Methods for Liquid Limit, Plastic Limit, and Plasticity Index of Soils.

1.3 SYSTEM DESCRIPTION

A. Limits of Work: Do not extend earthwork beyond areas of excavation or construction shown on Drawings or reasonably necessary for performance of Work.

B. Contractor is responsible for design of temporary earth retention systems.

1.4 SUBMITTALS

A. Sustainable Design Submittals:
1. Resource Reuse.
2. Regional Materials.

PART 2 PRODUCTS

2.1 MATERIALS

A. Engineered Fill:
1. Type: [Clay.] [Sand.] [____].
2. Tested to ASTM D4318, classified as Type [__] in accordance with ASTM D2487.
3. Free from trash, debris, roots over [1] [__] inch in diameter, matted roots, rocks over [3] [__] inches in diameter, topsoil, and other deleterious matter.

**** OR ****

B. [Engineered] [Drainage] Fill: [Recycled] [Crushed stone,] [Gravel,] graded as follows per ASTM C136:

CONFORMED

SIEVE SIZE	PERCENT PASSING
	[2] [__] inches [100] [__]
[1] [__] inch	[95] [__]
[3/4] [__] inch	[95 to 100] [__ to __]
[5/8] [__] inch	[75 to 100] [__ to __]
[3/8] [__] inch	[55 to 88] [__ to __]
No. [4] [__]	[35 to 60] [__ to __]
No. [16] [__]	[15 to 35] [__ to __]
No. [40] [__]	[10 to 25] [__ to __]
No. [200] [__]	[5 to 10] [__ to __]

C. Sand: Natural river or bank sand, washed, free from silt, clay, loam, friable or soluble materials, and organic matter, graded as follows per ASTM C136:

SIEVE SIZE	PERCENT PASSING
	No. [4] [__] [100] [__]
No. [14] [__]	[10 to 100] [__ to __]
No. [50] [__]	[5 to 90] [__ to __]
No. [100] [__]	[4 to 30] [__ to __]
No. [200] [__]	[0] [__]

D. Common Fill: [Reused site] [or] [imported] soils free from trash, debris, roots over [1] [__] inch in diameter, matted roots, rocks over [3] [__] inches in diameter, topsoil, and other deleterious matter.

2.2 SOURCE QUALITY CONTROL

A. Testing and Inspection Services: Test Engineered Fill prior to placement:
1. Liquid limit, plastic limit, and plasticity index: Test to ASTM D4318.
2. Moisture/density relationship: Test to ASTM D698.
3. Provide soil description; determine compliance with gradation and quality requirements.

PART 3 EXECUTION

3.1 EXCAVATING

A. Excavate to grades and subgrades indicated. Make excavations large enough to permit placing and inspection of work.

B. Stockpile excavated materials that are suitable for reuse separately from subgrade material.

C. Remove and dispose of excavated material that is unsuitable or not required for backfilling. Remove underground obstructions.

D. Brace sides of excavations where necessary; maintain until permanent construction is in place. Remove temporary shoring and bracing as backfill is placed.

E. Excavation for Structures:
1. Form bottoms of excavations reasonably level.
2. Maintain moisture level in excavations as near their natural level as possible.

F. Correct over-excavation under footings by use of lean concrete. Correct other over-excavation by use of [Engineered] [____] Fill, compacted to density of existing subgrade.

G. Keep excavations free of water.

3.2 FILLING

A. Prior to placing fill on existing subsoils, scarify to [__] inch depth and recompact to [[__] percent of ASTM [D698 standard] [D1557 modified] Proctor maximum dry density] [[__] percent of ASTM D4254 relative density] at a moisture content from [__] to [__] percentage points of optimum.

**** OR ****

B. Prior to placing fill on existing subsoils:
   1. Proof roll to detect soft and weak zones. Remove soft and spongy soils down to firm subsoil.
   2. Replace undercut areas with [Engineered] [_____] Fill placed in maximum [__] inch deep loose, even, horizontal lifts. Compact each lift to [[__] percent of ASTM [D698 standard] [D1557 modified] Proctor maximum dry density] [[__] percent of ASTM D4254 relative density] at a moisture content from [__] to [__] percentage points of optimum.

C. Fill low areas [outside of structures and under paving] with [Common] [_____] Fill to achieve required grades and elevations.
   1. Place fill in maximum [__] inch deep loose, even, horizontal lifts.
   2. Compact each lift to [[__] percent of ASTM [D698 standard] [D1557 modified] Proctor maximum dry density] [[__] percent of ASTM D4254 relative density] a moisture content from [__] to [__] percentage points of optimum.

D. Fill under structures with [Engineered] [_____] Fill.
   1. Place fill in maximum [__] inch deep loose, even, horizontal lifts.
   2. Compact each lift to [[__] percent of ASTM [D698 standard] [D1557 modified] Proctor maximum dry density] [[__] percent of ASTM D4254 relative density] at a moisture content from [__] to [__] percentage points of optimum.

E. Do not fill over porous, wet, frozen, or soft subgrades.

F. Bench fill into slopes.

G. When moisture must be added to aid in compaction, uniformly apply water to surface, but do not flood. Free water shall not appear on surface during or after compaction operations.

H. Scarify soil too wet for proper compaction and allow to dry. Replace and recompact.

I. Uniformly grade areas to smooth surface at required grades and elevations. Adjust contours to eliminate water ponding and provide positive drainage. Make grade changes gradually. Blend slopes into level grades.

J. Tolerances: Within plus or minus [1] [__] inch of required subgrade elevation.

3.3 TRENCHING

A. Cut trenches sufficiently wide to allow for installation of utilities and for inspection of work.

B. Hand trim excavations; remove loose matter.

C. Remove rocks and obstructions.

D. Correct over-excavation by use of lean concrete or pipe bedding material.

E. Keep trenches free of water.

3.4 BACKFILLING

A. Backfill under structures with [Engineered] [_____] Fill.
   1. Place backfill in loose, even, horizontal lifts maximum [__] inches deep.

2. Compact each lift to [[__] percent of ASTM [D698 standard] [D1557 modified] Proctor maximum dry density] [[__] percent of ASTM D4254 relative density] at a moisture content from [__] to [__] percentage points of optimum.

B. Backfill [outside of structures and under paving] with [Common] [____] Fill.
1. Place backfill in loose, even, horizontal lifts maximum [__] inches deep.
2. Compact each lift to [[__] percent of ASTM [D698 standard] [D1557 modified] Proctor maximum dry density] [[__] percent of ASTM D4254 relative density] at a moisture content from [__] to [__] percentage points of optimum.

3.5 FIELD QUALITY CONTROL

A. Testing and Inspection Services: Perform field in place density tests, ASTM D2922, at following rates; minimum of three tests for each lift or area:
1. Under structures: One test for each [__] square feet, per lift.
2. Under paving: One test for each [__] square feet, per lift.
3. Trenches [and] [below grade walls] [retaining walls] [grade beam backfill]: One test for each [__] linear feet, per lift.

3.6 CLEANING

A. Remove surplus materials and those not suitable for reuse from site.

3.7 PROTECTION

A. Protect graded areas from traffic and erosion; keep free of trash and debris.

END OF SECTION

CONFORMED

SECTION 32 1216

ASPHALT PAVING

PART 1 GENERAL

1.1 RELATED DOCUMENTS

A. Drawings and general provisions of the Contract, including General and Supplementary Conditions and Division 01 Specification Sections, apply to this Section.

1.2 SUMMARY

A. Section Includes:
   1. Hot-mix asphalt paving.
   2. Asphalt surface treatments.

1.3 PREINSTALLATION MEETINGS

A. Preinstallation Conference: Conduct conference at Project site.
   1. Review methods and procedures related to hot-mix asphalt paving including, but not limited to, the following:
      a. Review proposed sources of paving materials, including capabilities and location of plant that will manufacture hot-mix asphalt.
      b. Review requirements for protecting paving work, including restriction of traffic during installation period and for remainder of construction period.

1.4 ACTION SUBMITTALS

A. Product Data: For each type of product.
   1. Include technical data and tested physical and performance properties.
   2. Job-Mix Designs: Certification, by authorities having jurisdiction, of approval of each job mix proposed for the Work.
   3. Job-Mix Designs: For each job mix proposed for the Work.

1.5 INFORMATIONAL SUBMITTALS

A. Qualification Data: For manufacturer and testing agency.

B. Material Certificates: For each paving material. Include statement that mixes containing recycled materials will perform equal to mixes produced from all new materials.

C. Material Test Reports: For each paving material, by a qualified testing agency.

D. Field quality-control reports.

1.6 QUALITY ASSURANCE

A. Quality assurance shall comply with the requirements of Section 39 “Hot Mix Asphalt” of the Caltrans Standard Specifications and City of Turlock Standard Specifications.

1.7 FIELD CONDITIONS

A. Field Conditions shall comply with the requirements of Section 39 “Hot Mix Asphalt” of the Caltrans Standard Specifications and City of Turlock Standard Specifications.

CONFORMED

PART 2 PRODUCTS

2.1 AGGREGATES

A. Aggregates shall comply with the requirements of Section 39 “Hot Mix Asphalt” of the Caltrans Standard Specifications and City of Turlock Standard Specifications.

2.2 ASPHALT MATERIALS

A. Asphalt materials shall comply with the requirements of Section 39 “Hot Mix Asphalt” of the Caltrans Standard Specifications and City of Turlock Standard Specifications.

2.3 MIXES

A. Mixes shall comply with the requirements of Section 39 “Hot Mix Asphalt” of the Caltrans Standard Specifications and City of Turlock Standard Specifications.

PART 3 EXECUTION

3.1 EXAMINATION

A. Examination shall comply with the requirements of Section 39 “Hot Mix Asphalt” of the Caltrans Standard Specifications and City of Turlock Standard Specifications.

3.2 SURFACE PREPARATION

A. Surface Preparation shall comply with the requirements of Section 39 “Hot Mix Asphalt” of the Caltrans Standard Specifications and City of Turlock Standard Specifications.

3.3 PLACING HOT-MIX ASPHALT

A. Placing hot-mix asphalt shall comply with the requirements of Section 39 “Hot Mix Asphalt” of the Caltrans Standard Specifications and City of Turlock Standard Specifications.

3.4 JOINTS

A. Joints shall comply with the requirements of Section 39 “Hot Mix Asphalt” of the Caltrans Standard Specifications and City of Turlock Standard Specifications.

3.5 COMPACTION

A. Compaction shall comply with the requirements of Section 39 “Hot Mix Asphalt” of the Caltrans Standard Specifications and City of Turlock Standard Specifications.

3.6 INSTALLATION TOLERANCES

A. Pavement Thickness: Compact each course to produce the thickness indicated within the following tolerances:
   1. Base Course: Plus or minus 1/2 inch.
   2. Surface Course: Plus 1/4 inch, no minus.

B. Pavement Surface Smoothness: Compact each course to produce a surface smoothness within the following tolerances as determined by using a 10-foot straightedge applied transversely or longitudinally to paved areas:
   1. Base Course: 1/4 inch.
   2. Surface Course: 1/8 inch.
   3. Crowned Surfaces: Test with crowned template centered and at right angle to crown. Maximum allowable variance from template is 1/4 inch.

CONFORMED

3.7 SURFACE TREATMENTS

A. Examination shall comply with the requirements of Section 39 “Hot Mix Asphalt” of the Caltrans Standard Specifications and City of Turlock Standard Specifications.

3.8 FIELD QUALITY CONTROL

A. Testing Agency: Engage a qualified testing agency to perform tests and inspections.

B. Thickness: In-place compacted thickness of hot-mix asphalt courses will be determined according to ASTM D 3549.

C. Surface Smoothness: Finished surface of each hot-mix asphalt course will be tested for compliance with smoothness tolerances.

D. In-Place Density: Testing agency will take samples of uncompacted paving mixtures and compacted pavement according to ASTM D 979 or AASHTO T 168.
   1. Reference maximum theoretical density will be determined by averaging results from four samples of hot-mix asphalt-paving mixture delivered daily to site, prepared according to ASTM D 2041, and compacted according to job-mix specifications.
   2. In-place density of compacted pavement will be determined by testing core samples according to ASTM D 1188 or ASTM D 2726.
      a. One core sample will be taken for every 1000 sq. yd. or less of installed pavement, with no fewer than three cores taken.
      b. Field density of in-place compacted pavement may also be determined by nuclear method according to ASTM D 2950 and correlated with ASTM D 1188 or ASTM D 2726.

E. Replace and compact hot-mix asphalt where core tests were taken.

F. Remove and replace or install additional hot-mix asphalt where test results or measurements indicate that it does not comply with specified requirements.

END OF SECTION

CONFORMED

SECTION 321313

CONCRETE PAVING

PART 1 GENERAL

1.1 RELATED DOCUMENTS

A. Drawings and general provisions of the Contract, including General and Supplementary Conditions and Division 01 Specification Sections, apply to this Section.

1.2 SUMMARY

A. Section Includes Concrete Paving Including the Following:
1. Driveways.
2. Roadways.
3. Parking lots.
4. Curbs and gutters.
5. Walks.

B. Related Requirements:
1. Section 033000 "Cast-in-Place Concrete" for general building applications of concrete.
2. Section 321713 "Parking Bumpers."
3. Section 321723 "Pavement Markings."
4. Section 321726 "Tactile Warning Surfacing" for detectable warning mats.

1.3 DEFINITIONS

A. Cementitious Materials: Portland cement alone or in combination with one or more of blended hydraulic cement, fly ash, slag cement, and other pozzolans.

B. W/C Ratio: The ratio by weight of water to cementitious materials.

1.4 PREINSTALLATION MEETINGS

A. Preinstallation Conference: Conduct conference at Project site.
1. Review methods and procedures related to concrete paving, including but not limited to, the following:
   a. Concrete mixture design.
   b. Quality control of concrete materials and concrete paving construction practices.
2. Require representatives of each entity directly concerned with concrete paving to attend, including the following:
   a. Contractor's superintendent.
   b. Independent testing agency responsible for concrete design mixtures.
   c. Ready-mix concrete manufacturer.
   d. Concrete paving Subcontractor.
   e. Manufacturer's representative of stamped concrete paving system used for stamped detectable warnings.

1.5 ACTION SUBMITTALS

A. Product Data: For each type of product.

B. Samples for Initial Selection: For each type of product, ingredient, or admixture requiring color selection.

C. Samples for Verification: For each type of product or exposed finish, prepared as Samples of size indicated below:
   1. Exposed Aggregate: 10-lb Sample of each mix.

D. Design Mixtures: For each concrete paving mixture. Include alternate design mixtures when characteristics of materials, Project conditions, weather, test results, or other circumstances warrant adjustments.

1.6 INFORMATIONAL SUBMITTALS

A. Qualification Data: For qualified Installer of stamped detectable warnings ready-mix concrete manufacturer and testing agency.

B. Material Certificates: For the following, from manufacturer:
   1. Cementitious materials.
   2. Steel reinforcement and reinforcement accessories.
   3. Fiber reinforcement.
   4. Admixtures.
   5. Curing compounds.
   6. Applied finish materials.
   7. Bonding agent or epoxy adhesive.
   8. Joint fillers.

C. Material Test Reports: For each of the following:
   1. Aggregates: Include service-record data indicating absence of deleterious expansion of concrete due to alkali-aggregate reactivity.

D. Field quality-control reports.

1.7 QUALITY ASSURANCE

A. Stamped Detectable Warning Installer Qualifications: An employer of workers trained and approved by manufacturer of stamped concrete paving systems.

B. Ready-Mix-Concrete Manufacturer Qualifications: A firm experienced in manufacturing ready-mixed concrete products and that complies with ASTM C 94/C 94M requirements for production facilities and equipment.
   1. Manufacturer certified according to NRMCA's "Certification of Ready Mixed Concrete Production Facilities" (Quality Control Manual - Section 3, "Plant Certification Checklist").

C. Testing Agency Qualifications: Qualified according to ASTM C 1077 and ASTM E 329 for testing indicated.
   1. Personnel conducting field tests shall be qualified as ACI Concrete Field Testing Technician, Grade 1, according to ACI CP-1 or an equivalent certification program.

D. Mockups: Build mockups to verify selections made under Sample submittals and to demonstrate aesthetic effects and set quality standards for materials and execution.
   1. Build mockups of full-thickness sections of concrete paving to demonstrate typical joints; surface finish, texture, and color; curing; and standard of workmanship.
   2. Build mockups of concrete paving in the location and of the size indicated or, if not indicated, build mockups where directed by the City of Turlock.
   3. Approval of mockups does not constitute approval of deviations from the Contract Documents contained in mockups unless Architect specifically approves such deviations in writing.
   4. Subject to compliance with requirements, approved mockups may become part of the completed Work if undisturbed at time of Substantial Completion.

1.8 PRECONSTRUCTION TESTING

A. Preconstruction Testing Service: Engage a qualified independent testing agency to perform preconstruction testing on concrete paving mixtures.

1.9 FIELD CONDITIONS

A. Traffic Control: Maintain access for vehicular and pedestrian traffic as required for other construction activities.

B. Cold-Weather Concrete Placement: Protect concrete work from physical damage or reduced strength that could be caused by frost, freezing, or low temperatures. Comply with ACI 306.1 and the following:
1. When air temperature has fallen to or is expected to fall below 40 deg F, uniformly heat water and aggregates before mixing to obtain a concrete mixture temperature of not less than 50 deg F and not more than 80 deg F at point of placement.
2. Do not use frozen materials or materials containing ice or snow.
3. Do not use calcium chloride, salt, or other materials containing antifreeze agents or chemical accelerators unless otherwise specified and approved in design mixtures.

C. Hot-Weather Concrete Placement: Comply with ACI 301 and as follows when hot-weather conditions exist:
1. Cool ingredients before mixing to maintain concrete temperature below 90 deg F at time of placement. Chilled mixing water or chopped ice may be used to control temperature, provided water equivalent of ice is calculated in total amount of mixing water. Using liquid nitrogen to cool concrete is Contractor's option.
2. Cover steel reinforcement with water-soaked burlap, so steel temperature will not exceed ambient air temperature immediately before embedding in concrete.
3. Fog-spray forms, steel reinforcement, and subgrade just before placing concrete. Keep subgrade moisture uniform without standing water, soft spots, or dry areas.

PART 2 PRODUCTS

2.1 CONCRETE, GENERAL

A. ACI Publications: Comply with ACI 301 unless otherwise indicated.

2.2 FORMS

A. Form Materials: Plywood, metal, metal-framed plywood, or other approved panel-type materials to provide full-depth, continuous, straight, and smooth exposed surfaces.
1. Use flexible or uniformly curved forms for curves with a radius of 100 feet or less. Do not use notched and bent forms.

B. Form-Release Agent: Commercially formulated form-release agent that will not bond with, stain, or adversely affect concrete surfaces and that will not impair subsequent treatments of concrete surfaces.

2.3 STEEL REINFORCEMENT

A. Plain-Steel Welded-Wire Reinforcement: ASTM A 1064/A 1064M, fabricated from galvanized-steel wire into flat sheets.

B. Deformed-Steel Welded-Wire Reinforcement: ASTM A 1064/A 1064M, flat sheet.

C. Epoxy-Coated Welded-Wire Reinforcement: ASTM A 884/A 884M, Class A, plain steel.

D. Reinforcing Bars: ASTM A 615/A 615M, Grade 60; deformed.

E. Galvanized Reinforcing Bars: ASTM A 767/A 767M, Class II zinc coated, hot-dip galvanized after fabrication and bending; with ASTM A 615/A 615M, Grade 60 deformed bars.

F. Epoxy-Coated Reinforcing Bars: ASTM A 775/A 775M or ASTM A 934/A 934M; with ASTM A 615/A 615M, Grade 60 deformed bars.

G. Steel Bar Mats: ASTM A 184/A 184M; with ASTM A 615/A 615M, Grade 60 deformed bars; assembled with clips.

H. Plain-Steel Wire: ASTM A 1064/A 1064M, galvanized.

I. Deformed-Steel Wire: ASTM A 1064/A 1064M.

J. Epoxy-Coated-Steel Wire: ASTM A 884/A 884M, Class A; coated, plain.

K. Joint Dowel Bars: ASTM A 615/A 615M, Grade 60 plain-steel bars; zinc coated (galvanized) after fabrication according to ASTM A 767/A 767M, Class I coating. Cut bars true to length with ends square and free of burrs.

L. Epoxy-Coated, Joint Dowel Bars: ASTM A 775/A 775M; with ASTM A 615/A 615M, Grade 60 plain-steel bars.

M. Tie Bars: ASTM A 615/A 615M, Grade 60; deformed.

N. Epoxy Repair Coating: Liquid, two-part, epoxy repair coating, compatible with epoxy coating on reinforcement.

O. Zinc Repair Material: ASTM A 780/A 780M.

2.4 CONCRETE MATERIALS

A. Cementitious Materials shall comply with the requirements of Section 90 of the Caltrans Standard Specifications and City of Turlock Standard Specifications.

B. Normal-Weight Aggregates shall comply with the requirements of Section 90 of the Caltrans Standard Specifications and City of Turlock Standard Specifications.

C. Air-Entraining Admixture: ASTM C 260/C 260M.

D. Chemical Admixtures: Admixtures certified by manufacturer to be compatible with other admixtures and to contain not more than 0.1 percent water-soluble chloride ions by mass of cementitious material.
   1. Water-Reducing Admixture: ASTM C 494/C 494M, Type A.
   2. Retarding Admixture: ASTM C 494/C 494M, Type B.
   3. Water-Reducing and Retarding Admixture: ASTM C 494/C 494M, Type D.
   4. High-Range, Water-Reducing Admixture: ASTM C 494/C 494M, Type F.
   5. High-Range, Water-Reducing and Retarding Admixture: ASTM C 494/C 494M, Type G.
   6. Plasticizing and Retarding Admixture: ASTM C 1017/C 1017M, Type II.

E. Color Pigment: ASTM C 979/C 979M, synthetic mineral-oxide pigments or colored water-reducing admixtures; color stable, free of carbon black, nonfading, and resistant to lime and other alkalis.
   1. Color: As indicated on plans.

F. Water: Potable and complying with ASTM C 94/C 94M.

2.5 FIBER REINFORCEMENT

A. Synthetic Fiber: Monofilament polypropylene fibers engineered and designed for use in decorative concrete paving, complying with ASTM C 1116/C 1116M, Type III, 1/2 to 1-1/2 inches long.

B. Synthetic Fiber: Fibrillated polypropylene fibers engineered and designed for use in decorative concrete paving, complying with ASTM C 1116/C 1116M, Type III, 1/2 to 1-1/2 inches long.

2.6 CURING MATERIALS

A. Absorptive Cover: AASHTO M 182, Class 3, burlap cloth made from jute or kenaf, weighing approximately 9 oz./sq. yd. dry or cotton mats.

B. Moisture-Retaining Cover: ASTM C 171, polyethylene film or white burlap-polyethylene sheet.

C. Water: Potable.

D. Evaporation Retarder: Waterborne, monomolecular, film forming, manufactured for application to fresh concrete.

E. Clear, Waterborne, Membrane-Forming Curing Compound: ASTM C 309, Type 1, Class B, dissipating.

F. White, Waterborne, Membrane-Forming Curing Compound: ASTM C 309, Type 2, Class B, dissipating.

2.7 RELATED MATERIALS

A. Joint Fillers: ASTM D 1751, asphalt-saturated cellulosic fiber or ASTM D 1752, cork or self-expanding cork in preformed strips.

B. Slip-Resistive Aggregate Finish: Factory-graded, packaged, rustproof, nonglazing, abrasive aggregate of fused aluminum-oxide granules or crushed emery aggregate containing not less than 50 percent aluminum oxide and not less than 20 percent ferric oxide; unaffected by freezing, moisture, and cleaning materials.

C. Bonding Agent: ASTM C 1059/C 1059M, Type II, non-redispersible, acrylic emulsion or styrene butadiene.

D. Epoxy-Bonding Adhesive: ASTM C 881/C 881M, two-component epoxy resin capable of humid curing and bonding to damp surfaces; of class suitable for application temperature, of grade complying with requirements, and of the following types:
   1. Types I and II, nonload bearing, for bonding hardened or freshly mixed concrete to hardened concrete.

E. Chemical Surface Retarder: Water-soluble, liquid, set retarder with color dye, for horizontal concrete surface application, capable of temporarily delaying final hardening of concrete to a depth of 1/8 to 1/4 inch.

F. Pigmented Mineral Dry-Shake Hardener: Factory-packaged, dry combination of portland cement, graded quartz aggregate, color pigments, and plasticizing admixture. Use color pigments that are finely ground, nonfading mineral oxides interground with cement.
   1. Color: As indicated on plans.

G. Rock Salt: Sodium chloride crystals, kiln dried, coarse gradation with 100 percent passing 3/8-inch sieve and 85 percent retained on a No. 8 sieve.

2.8 STAMPED DETECTABLE WARNING MATERIALS

A. Detectable Warning Stamp: Semirigid polyurethane mats with formed underside capable of imprinting detectable warning pattern on plastic concrete; perforated with a vent hole at each dome.
   1. Size of Stamp: One piece, matching detectable warning area shown on Drawings.

B. Liquid Release Agent: Manufacturer's standard, clear, evaporating formulation designed to facilitate release of stamp mats.

2.9 CONCRETE MIXTURES

A. Prepare design mixtures, proportioned according to ACI 301, for each type and strength of normal-weight concrete, and as determined by either laboratory trial mixtures or field experience.
   1. Use a qualified independent testing agency for preparing and reporting proposed concrete design mixtures for the trial batch method.
   2. When automatic machine placement is used, determine design mixtures and obtain laboratory test results that comply with or exceed requirements.

B. Cementitious Materials: Use fly ash, pozzolan, slag cement, and silica fume as needed to reduce the total amount of portland cement, which would otherwise be used, by not less than 40 percent. Limit percentage, by weight, of cementitious materials other than portland cement in concrete as follows:
   1. Fly Ash or Pozzolan: 25 percent.
   2. Slag Cement: 50 percent.
   3. Combined Fly Ash or Pozzolan, and Slag Cement: 50 percent, with fly ash or pozzolan not exceeding 25 percent.

C. Add air-entraining admixture at manufacturer's prescribed rate to result in normal-weight concrete at point of placement having an air content as follows:
   1. Air Content: 4-1/2 percent plus or minus 1-1/2 percent for 1-1/2-inch nominal maximum aggregate size.
   2. Air Content: 4-1/2 percent plus or minus 1-1/2 percent for 1-inch nominal maximum aggregate size.
   3. Air Content: 5 percent plus or minus 1-1/2 percent for 3/4-inch nominal maximum aggregate size.

D. Limit water-soluble, chloride-ion content in hardened concrete to 0.15 percent by weight of cement.

E. Chemical Admixtures: Use admixtures according to manufacturer's written instructions.
   1. Use water-reducing admixture in concrete as required for placement and workability.
   2. Use water-reducing and retarding admixture when required by high temperatures, low humidity, or other adverse placement conditions.

F. Synthetic Fiber: Uniformly disperse in concrete mixture at manufacturer's recommended rate, but not less than 1.0 lb/cu. yd.

G. Color Pigment: Add color pigment to concrete mixture according to manufacturer's written instructions and to result in hardened concrete color consistent with approved mockup.

H. Concrete Mixtures shall comply with the requirements of Section 90 of the Caltrans Standard Specifications and City of Turlock Standard Specifications.

I. Ready-Mixed Concrete: Measure, batch, and mix concrete materials and concrete according to ASTM C 94/C 94M and ASTM C 1116/C 1116M. Furnish batch certificates for each batch discharged and used in the Work.
   1. When air temperature is between 85 and 90 deg F, reduce mixing and delivery time from 1-1/2 hours to 75 minutes; when air temperature is above 90 deg F, reduce mixing and delivery time to 60 minutes.

J. Project-Site Mixing: Measure, batch, and mix concrete materials and concrete according to ASTM C 94/C 94M. Mix concrete materials in appropriate drum-type batch machine mixer.
   1. For concrete batches of 1 cu. yd. or smaller, continue mixing at least 1-1/2 minutes, but not more than 5 minutes after ingredients are in mixer, before any part of batch is released.
   2. For concrete batches larger than 1 cu. yd., increase mixing time by 15 seconds for each additional 1 cu. yd..
   3. Provide batch ticket for each batch discharged and used in the Work, indicating Project identification name and number, date, mixture type, mixing time, quantity, and amount of water added.

PART 3 EXECUTION

3.1 EXAMINATION

A. Examine exposed subgrades and subbase surfaces for compliance with requirements for dimensional, grading, and elevation tolerances.

B. Proof-roll prepared subbase surface below concrete paving to identify soft pockets and areas of excess yielding.
   1. Completely proof-roll subbase in one direction and repeat in perpendicular direction. Limit vehicle speed to 3 mph.
   2. Proof-roll with a pneumatic-tired and loaded, 10-wheel, tandem-axle dump truck weighing not less than 15 tons.

C. Proceed with installation only after unsatisfactory conditions have been corrected.

3.2 PREPARATION

A. Remove loose material from compacted subbase surface immediately before placing concrete.

3.3 EDGE FORMS AND SCREED CONSTRUCTION

A. Set, brace, and secure edge forms, bulkheads, and intermediate screed guides to required lines, grades, and elevations. Install forms to allow continuous progress of work and so forms can remain in place at least 24 hours after concrete placement.

B. Clean forms after each use and coat with form-release agent to ensure separation from concrete without damage.

3.4 STEEL REINFORCEMENT INSTALLATION

A. General: Comply with CRSI's "Manual of Standard Practice" for fabricating, placing, and supporting reinforcement.

B. Clean reinforcement of loose rust and mill scale, earth, ice, or other bond-reducing materials.

C. Arrange, space, and securely tie bars and bar supports to hold reinforcement in position during concrete placement. Maintain minimum cover to reinforcement.

D. Install welded-wire reinforcement in lengths as long as practicable. Lap adjoining pieces at least one full mesh, and lace splices with wire. Offset laps of adjoining widths to prevent continuous laps in either direction.

E. Zinc-Coated Reinforcement: Use galvanized-steel wire ties to fasten zinc-coated reinforcement. Repair cut and damaged zinc coatings with zinc repair material.

F. Epoxy-Coated Reinforcement: Use epoxy-coated steel wire ties to fasten epoxy-coated reinforcement. Repair cut and damaged epoxy coatings with epoxy repair coating according to ASTM D 3963/D 3963M.

G. Install fabricated bar mats in lengths as long as practicable. Handle units to keep them flat and free of distortions. Straighten bends, kinks, and other irregularities, or replace units as required before placement. Set mats for a minimum 2-inch overlap of adjacent mats.

3.5 JOINTS

A. General: Form construction, isolation, and contraction joints and tool edges true to line, with faces perpendicular to surface plane of concrete. Construct transverse joints at right angles to centerline unless otherwise indicated.
   1. When joining existing paving, place transverse joints to align with previously placed joints unless otherwise indicated.

B. Construction Joints: Set construction joints at side and end terminations of paving and at locations where paving operations are stopped for more than one-half hour unless paving terminates at isolation joints.
   1. Continue steel reinforcement across construction joints unless otherwise indicated. Do not continue reinforcement through sides of paving strips unless otherwise indicated.
   2. Provide tie bars at sides of paving strips where indicated.
   3. Butt Joints: Use bonding agent at joint locations where fresh concrete is placed against hardened or partially hardened concrete surfaces.
   4. Keyed Joints: Provide preformed keyway-section forms or bulkhead forms with keys unless otherwise indicated. Embed keys at least 1-1/2 inches into concrete.
   5. Doweled Joints: Install dowel bars and support assemblies at joints where indicated. Lubricate or coat with asphalt one-half of dowel length to prevent concrete bonding to one side of joint.

C. Isolation Joints: Form isolation joints of preformed joint-filler strips abutting concrete curbs, catch basins, manholes, inlets, structures, other fixed objects, and where indicated.
   1. Locate expansion joints at intervals of 50 feet unless otherwise indicated.
   2. Extend joint fillers full width and depth of joint.
   3. Terminate joint filler not less than 1/2 inch or more than 1 inch below finished surface if joint sealant is indicated.
   4. Place top of joint filler flush with finished concrete surface if joint sealant is not indicated.
   5. Furnish joint fillers in one-piece lengths. Where more than one length is required, lace or clip joint-filler sections together.
   6. During concrete placement, protect top edge of joint filler with metal, plastic, or other temporary preformed cap. Remove protective cap after concrete has been placed on both sides of joint.

D. Contraction Joints: Form weakened-plane contraction joints, sectioning concrete into areas as indicated. Construct contraction joints for a depth equal to at least one-fourth of the concrete thickness, as follows, to match jointing of existing adjacent concrete paving:
   1. Grooved Joints: Form contraction joints after initial floating by grooving and finishing each edge of joint with grooving tool to a 1/4-inch radius. Repeat grooving of contraction joints after applying surface finishes. Eliminate grooving-tool marks on concrete surfaces.
      a. Tolerance: Ensure that grooved joints are within 3 inches either way from centers of dowels.
   2. Sawed Joints: Form contraction joints with power saws equipped with shatterproof abrasive or diamond-rimmed blades. Cut 1/8-inch-wide joints into concrete when cutting action will not tear, abrade, or otherwise damage surface and before developing random contraction cracks.
      a. Tolerance: Ensure that sawed joints are within 3 inches either way from centers of dowels.
   3. Doweled Contraction Joints: Install dowel bars and support assemblies at joints where indicated. Lubricate or coat with asphalt one-half of dowel length to prevent concrete bonding to one side of joint.

E. Edging: After initial floating, tool edges of paving, gutters, curbs, and joints in concrete with an edging tool to a 1/4-inch radius. Repeat tooling of edges after applying surface finishes. Eliminate edging-tool marks on concrete surfaces.

3.6 CONCRETE PLACEMENT

A. Before placing concrete, inspect and complete formwork installation, steel reinforcement, and items to be embedded or cast-in.

B. Remove snow, ice, or frost from subbase surface and steel reinforcement before placing concrete. Do not place concrete on frozen surfaces.

C. Moisten subbase to provide a uniform dampened condition at time concrete is placed. Do not place concrete around manholes or other structures until they are at required finish elevation and alignment.

D. Comply with ACI 301 requirements for measuring, mixing, transporting, and placing concrete.

E. Do not add water to concrete during delivery or at Project site. Do not add water to fresh concrete after testing.

F. Deposit and spread concrete in a continuous operation between transverse joints. Do not push or drag concrete into place or use vibrators to move concrete into place.

G. Consolidate concrete according to ACI 301 by mechanical vibrating equipment supplemented by hand spading, rodding, or tamping.
   1. Consolidate concrete along face of forms and adjacent to transverse joints with an internal vibrator. Keep vibrator away from joint assemblies, reinforcement, or side forms. Use only square-faced shovels for hand spreading and consolidation. Consolidate with care to prevent dislocating reinforcement dowels and joint devices.

H. Screed paving surface with a straightedge and strike off.

I. Commence initial floating using bull floats or darbies to impart an open-textured and uniform surface plane before excess moisture or bleedwater appears on the surface. Do not further disturb concrete surfaces before beginning finishing operations or spreading surface treatments.

J. Curbs and Gutters: Use design mixture for automatic machine placement. Produce curbs and gutters to required cross section, lines, grades, finish, and jointing.

K. Slip-Form Paving: Use design mixture for automatic machine placement. Produce paving to required thickness, lines, grades, finish, and jointing.
   1. Compact subbase and prepare subgrade of sufficient width to prevent displacement of slip-form paving machine during operations.

3.7 FLOAT FINISHING

A. General: Do not add water to concrete surfaces during finishing operations.

B. Float Finish: Begin the second floating operation when bleedwater sheen has disappeared and concrete surface has stiffened sufficiently to permit operations. Float surface with power-driven floats or by hand floating if area is small or inaccessible to power units. Finish surfaces to true planes. Cut down high spots and fill low spots. Refloat surface immediately to uniform granular texture.
   1. Burlap Finish: Drag a seamless strip of damp burlap across float-finished concrete, perpendicular to line of traffic, to provide a uniform, gritty texture.
   2. Medium-to-Fine-Textured Broom Finish: Draw a soft-bristle broom across float-finished concrete surface, perpendicular to line of traffic, to provide a uniform, fine-line texture.

3. Medium-to-Coarse-Textured Broom Finish: Provide a coarse finish by striating float-finished concrete surface 1/16 to 1/8 inch deep with a stiff-bristled broom, perpendicular to line of traffic.

3.8 SPECIAL FINISHES

A. Pigmented Mineral Dry-Shake Hardener Finish: After initial floating, apply dry-shake materials to paving surface according to manufacturer's written instructions and as follows:
   1. Uniformly spread dry-shake hardener at a rate of 100 lb/100 sq. ft. unless greater amount is recommended by manufacturer to match paving color required.
   2. Uniformly distribute approximately two-thirds of dry-shake hardener over the concrete surface with mechanical spreader; allow hardener to absorb moisture and embed it by power floating. Follow power floating with a second application of pigmented mineral dry-shake hardener, uniformly distributing remainder of material at right angles to first application to ensure uniform color, and embed hardener by final power floating.
   3. After final power floating, apply a hand-troweled finish followed by a broom finish.
   4. Cure concrete with curing compound recommended by dry-shake hardener manufacturer. Apply curing compound immediately after final finishing.

3.9 DETECTABLE WARNING INSTALLATION

A. Blockouts: Form blockouts in concrete for installation of detectable paving units specified in Section 321726 "Tactile Warning Surfacing."
   1. Tolerance for Opening Size: Plus 1/4 inch, no minus.

B. Cast-in-Place Detectable Warning Tiles: Form blockouts in concrete for installation of tiles specified in Section 321726 "Tactile Warning Surfacing." Screed surface of concrete where tiles are to be installed to elevation, so that edges of installed tiles will be flush with surrounding concrete paving. Embed tiles in fresh concrete to comply with Section 321726 "Tactile Warning Surfacing" immediately after screeding concrete surface.

C. Stamped Detectable Warnings: Install stamped detectable warnings as part of a continuous concrete paving placement and according to stamp-mat manufacturer's written instructions.
   1. Before using stamp mats, verify that the vent holes are unobstructed.
   2. Apply liquid release agent to the concrete surface and the stamp mat.
   3. Stamping: While initially finished concrete is plastic, accurately align and place stamp mats in sequence. Uniformly load, gently vibrate, and press mats into concrete to produce imprint pattern on concrete surface. Load and tamp mats directly perpendicular to the stamp-mat surface to prevent distortion in shape of domes. Press and tamp until mortar begins to come through all of the vent holes. Gently remove stamp mats.
   4. Trimming: After 24 hours, cut off the tips of mortar formed by the vent holes.
   5. Remove residual release agent according to manufacturer's written instructions, but no fewer than three days after stamping concrete. High-pressure-wash surface and joint patterns, taking care not to damage stamped concrete. Control, collect, and legally dispose of runoff.

3.10 CONCRETE PROTECTION AND CURING

A. General: Protect freshly placed concrete from premature drying and excessive cold or hot temperatures.

B. Comply with ACI 306.1 for cold-weather protection.

C. Evaporation Retarder: Apply evaporation retarder to concrete surfaces if hot, dry, or windy conditions cause moisture loss approaching 0.2 lb/sq. ft. x h before and during finishing operations. Apply according to manufacturer's written instructions after placing, screeding, and bull floating or darbying concrete but before float finishing.

D. Begin curing after finishing concrete but not before free water has disappeared from concrete surface.

E. Curing Methods: Cure concrete by moisture curing as follows:
   1. Moisture Curing: Keep surfaces continuously moist for not less than seven days with the following materials:
      a. Water.
      b. Continuous water-fog spray.
      c. Absorptive cover, water saturated and kept continuously wet. Cover concrete surfaces and edges with 12-inch lap over adjacent absorptive covers.
   2. Moisture-Retaining-Cover Curing: Cover concrete surfaces with moisture-retaining cover, placed in widest practicable width, with sides and ends lapped at least 12 inches, and sealed by waterproof tape or adhesive. Immediately repair any holes or tears occurring during installation or curing period, using cover material and waterproof tape.
   3. Curing Compound: Apply uniformly in continuous operation by power spray or roller according to manufacturer's written instructions. Recoat areas subjected to heavy rainfall within three hours after initial application. Maintain continuity of coating, and repair damage during curing period.

3.11 PAVING TOLERANCES

A. Comply with tolerances in ACI 117 and as follows:
   1. Elevation: 3/4 inch.
   2. Thickness: Plus 3/8 inch, minus 1/4 inch.
   3. Surface: Gap below 10-feet-long; unleveled straightedge not to exceed 1/2 inch.
   4. Alignment of Tie-Bar End Relative to Line Perpendicular to Paving Edge: 1/2 inch per 12 inches of tie bar.
   5. Lateral Alignment and Spacing of Dowels: 1 inch.
   6. Vertical Alignment of Dowels: 1/4 inch.
   7. Alignment of Dowel-Bar End Relative to Line Perpendicular to Paving Edge: 1/4 inch per 12 inches of dowel.
   8. Joint Spacing: 3 inches.
   9. Contraction Joint Depth: Plus 1/4 inch, no minus.
   10. Joint Width: Plus 1/8 inch, no minus.

3.12 FIELD QUALITY CONTROL

A. Testing Agency: Owner will engage a qualified testing agency to perform tests and inspections.

B. Testing Services: Testing and inspecting of composite samples of fresh concrete obtained according to ASTM C 172/C 172M shall be performed according to the following requirements:
   1. Testing Frequency: Obtain at least one composite sample for each 100 cu. yd. or fraction thereof of each concrete mixture placed each day.
      a. When frequency of testing will provide fewer than five compressive-strength tests for each concrete mixture, testing shall be conducted from at least five randomly selected batches or from each batch if fewer than five are used.
   2. Slump: ASTM C 143/C 143M; one test at point of placement for each composite sample, but not less than one test for each day's pour of each concrete mixture. Perform additional tests when concrete consistency appears to change.
   3. Air Content: ASTM C 231/C 231M, pressure method; one test for each composite sample, but not less than one test for each day's pour of each concrete mixture.
   4. Concrete Temperature: ASTM C 1064/C 1064M; one test hourly when air temperature is 40 deg F and below and when it is 80 deg F and above, and one test for each composite sample.
   5. Compression Test Specimens: ASTM C 31/C 31M; cast and laboratory cure one set of three standard cylinder specimens for each composite sample.
   6. Compressive-Strength Tests: ASTM C 39/C 39M; test one specimen at seven days and two specimens at 28 days.
      a. A compressive-strength test shall be the average compressive strength from two specimens obtained from same composite sample and tested at 28 days.

CONFORMED

C. Strength of each concrete mixture will be satisfactory if average of any three consecutive compressive-strength tests equals or exceeds specified compressive strength and no compressive-strength test value falls below specified compressive strength by more than 500 psi.

D. Test results shall be reported in writing to Architect, concrete manufacturer, and Contractor within 48 hours of testing. Reports of compressive-strength tests shall contain Project identification name and number, date of concrete placement, name of concrete testing and inspecting agency, location of concrete batch in Work, design compressive strength at 28 days, concrete mixture proportions and materials, compressive breaking strength, and type of break for both 7- and 28-day tests.

E. Nondestructive Testing: Impact hammer, sonoscope, or other nondestructive device may be permitted by Architect but will not be used as sole basis for approval or rejection of concrete.

F. Additional Tests: Testing and inspecting agency shall make additional tests of concrete when test results indicate that slump, air entrainment, compressive strengths, or other requirements have not been met, as directed by Architect.

G. Concrete paving will be considered defective if it does not pass tests and inspections.

H. Additional testing and inspecting, at Contractor's expense, will be performed to determine compliance of replaced or additional work with specified requirements.

I. Prepare test and inspection reports.

3.13 REPAIR AND PROTECTION

A. Remove and replace concrete paving that is broken, damaged, or defective or that does not comply with requirements in this Section. Remove work in complete sections from joint to joint unless otherwise approved by Architect.

B. Drill test cores, where directed by Architect, when necessary to determine magnitude of cracks or defective areas. Fill drilled core holes in satisfactory paving areas with portland cement concrete bonded to paving with epoxy adhesive.

C. Protect concrete paving from damage. Exclude traffic from paving for at least 14 days after placement. When construction traffic is permitted, maintain paving as clean as possible by removing surface stains and spillage of materials as they occur.

D. Maintain concrete paving free of stains, discoloration, dirt, and other foreign material. Sweep paving not more than two days before date scheduled for Substantial Completion inspections.

END OF SECTION

CONFORMED

SECTION 32 14 00

UNIT PAVING

PART 1 - GENERAL

1.1 RELATED DOCUMENTS

A. Drawings and general provisions of the Contract, including General and Supplementary Conditions and Division 01 Specification Sections, apply to this Section.

1.2 SUMMARY

A. Section Includes:
1. Concrete pavers set in aggregate setting beds.
2. Aluminum edge restraints.
3. Cast-in-place concrete edge restraints.

B. Related Requirements:
1. Section 321313 "Concrete Paving" for cast-in-place concrete curbs and gutters serving as edge restraints for unit pavers.

1.3 PREINSTALLATION MEETINGS

A. Preinstallation Conference: Conduct conference at Project site.

1.4 ACTION SUBMITTALS

A. Product Data: For materials other than water and aggregates.

B. Product Data: For the following:

1. Pavers.
2. Mortar and grout materials.
3. Edge restraints.
4. Precast concrete curbs.

C. Sieve Analyses: For aggregate setting-bed materials, according to ASTM C 136.

1. Joint materials.
2. Exposed edge restraints.
3. Precast concrete curbs.

1.5 INFORMATIONAL SUBMITTALS

A. Material Certificates: For unit pavers. Include statements of material properties indicating compliance with requirements, including compliance with standards. Provide for each type and size of unit.

1.6 QUALITY ASSURANCE

A. Mockups: Build mockups to verify selections made under Sample submittals, to demonstrate aesthetic effects, and to set quality standards for materials and execution.

1. Subject to compliance with requirements, approved mockups may become part of the completed Work if undisturbed at time of Substantial Completion.

1.7 DELIVERY, STORAGE, AND HANDLING

A. Store pavers on elevated platforms in a dry location. If units are not stored in an enclosed location, cover tops and sides of stacks with waterproof sheeting, securely tied.

B. Store cementitious materials on elevated platforms, under cover, and in a dry location. Do not use cementitious materials that have become damp.

C. Store aggregates where grading and other required characteristics can be maintained and contamination avoided.

D. Store liquids in tightly closed containers protected from freezing.

1.8 FIELD CONDITIONS

A. Cold-Weather Protection: Do not use frozen materials or materials mixed or coated with ice or frost. Do not build on frozen subgrade or setting beds. Remove and replace unit paver work damaged by frost or freezing.

B. Weather Limitations for Mortar and Grout:

1. Cold-Weather Requirements: Comply with cold-weather construction requirements contained in TMS 602/ACI 530.1/ASCE 6.
2. Hot-Weather Requirements: Comply with hot-weather construction requirements contained in TMS 602/ACI 530.1/ASCE 6. Provide artificial shade and windbreaks and use cooled materials as required. Do not apply mortar to substrates with temperatures of 100 deg F (38 deg C) and higher.

a. When ambient temperature exceeds 100 deg F (38 deg C), or when wind velocity exceeds 8 mph (13 km/h) and ambient temperature exceeds 90 deg F (32 deg C), set pavers within 1 minute of spreading setting-bed mortar.

PART 2 - PRODUCTS

2.1 MANUFACTURERS

A. Source Limitations: Obtain each type of unit paver, joint material, and setting material from single source with resources to provide materials and products of consistent quality in appearance and physical properties.

2.2 CONCRETE PAVERS

A. Concrete Pavers: Solid interlocking paving units complying with ASTM C 936/C 936M, made from normal-weight aggregates.

1. Thickness: 2-3/8 inches (60 mm).
2. Face Size and Shape: as indicated.
3. Color: as indicated.

2.3 CURBS AND EDGE RESTRAINTS

A. Aluminum Edge Restraints: Manufacturer's standard as indicated.

2.4 AGGREGATE SETTING-BED MATERIALS

A. Graded Aggregate for Subbase: Sound, crushed stone or gravel complying with ASTM D 448 for Size No. 57.

B. Graded Aggregate for Base: Sound, crushed stone or gravel complying with ASTM D 448 for Size No. 8.

C. Sand for Leveling Course: Sound, sharp, washed, natural sand or crushed stone complying with gradation requirements in ASTM C 33/C 33M for fine aggregate.

D. Sand for Joints: Fine, sharp, washed, natural sand or crushed stone with 100 percent passing No. 16 (1.18-mm) sieve and no more than 10 percent passing No. 200 (0.075-mm) sieve.

1. Provide sand of color needed to produce required joint color.

E. Separation Geotextile: Woven geotextile fabric, manufactured for separation applications; made from polyolefins or polyesters, with elongation less than 50 percent; complying with AASHTO M 288 and the following, measured per test methods referenced:

1. Survivability: Class 2, AASHTO M 288.
2. Apparent Opening Size: No. 60 (0.250-mm) sieve, maximum; ASTM D 4751.
3. Permittivity: 0.02 per second, minimum; ASTM D 4491.
4. UV Stability: 50 percent after 500 hours' exposure, ASTM D 4355.

F. Herbicide: Commercial chemical for weed control, registered with the EPA. Provide in granular, liquid, or wettable powder form.

2.5 MORTAR SETTING-BED MATERIALS

A. Regional Materials: Provide aggregate for mortar that has been extracted, harvested, or recovered, as well as manufactured, within 500 miles (800 km) of Project site.

B. Portland Cement: ASTM C 150/C 150M, Type I or Type II.

C. Hydrated Lime: ASTM C 207, Type S.

D. Sand: ASTM C 144.

E. Water: Potable.

2.6 GROUT MATERIALS

A. Sand-Portland Cement Grout: ANSI A108.10, made of white or gray cement and white or colored aggregate as required to produce color indicated.

B. Standard Cement Grout: ANSI A118.6, sanded.

C. Water: Potable.

2.7 MORTAR AND GROUT MIXES

A. General: Comply with referenced standards and with manufacturers' written instructions for mix proportions, mixing equipment, mixer speeds, mixing containers, mixing times, and other procedures needed to produce setting-bed and joint materials of uniform quality and with optimal performance characteristics. Discard mortars and grout if they have reached their initial set before being used.

B. Mortar-Bed Bond Coat: Mix neat cement and water to a creamy consistency.

C. Job-Mixed Portland Cement Grout: Proportion and mix job-mixed portland cement and aggregate grout to match setting-bed mortar except omit hydrated lime and use enough water to produce a pourable mixture.

PART 3 - EXECUTION

3.1 EXAMINATION

A. Examine surfaces indicated to receive unit paving, with Installer present, for compliance with requirements for installation tolerances and other conditions affecting performance.

B. Where unit paving is to be installed over waterproofing, examine waterproofing installation, with waterproofing Installer present, for protection from paving operations, including areas where waterproofing system is turned up or flashed against vertical surfaces.

C. Proceed with installation only after unsatisfactory conditions have been corrected.

3.2 PREPARATION

A. Remove substances from concrete substrates that could impair mortar bond, including curing and sealing compounds, form oil, and laitance.

B. Sweep concrete substrates to remove dirt, dust, debris, and loose particles.

C. Proceed with unit paver installation only after deficient subgrades have been corrected and are ready to receive subbase and base course for unit pavers.

3.3 INSTALLATION, GENERAL

A. Do not use unit pavers with chips, cracks, voids, discolorations, or other defects that might be visible or cause staining in finished work.

B. Mix pavers from several pallets or cubes, as they are placed, to produce uniform blend of colors and textures.

C. Cut unit pavers with motor-driven masonry saw equipment to provide clean, sharp, unchipped edges. Cut units to provide pattern indicated and to fit adjoining work neatly. Use full units without cutting where possible. Hammer cutting is not acceptable.

D. Joint Pattern: As indicated.

E. Pavers over Waterproofing: Exercise care in placing pavers and setting materials over waterproofing so protection materials are not displaced and waterproofing is not punctured or otherwise damaged. Carefully replace protection materials that become displaced and arrange for repair of damaged waterproofing before covering with paving.

F. Tolerances: Do not exceed 1/16-inch (1.6-mm) unit-to-unit offset from flush (lippage) nor 1/8 inch in 24 inches (3 mm in 600 mm) and 1/4 inch in 10 feet (6 mm in 3 m) from level, or indicated slope, for finished surface of paving.

G. Provide edge restraints as indicated. Install edge restraints before placing unit pavers.

1. Install edge restraints to comply with manufacturer's written instructions. Install stakes at intervals required to hold edge restraints in place during and after unit paver installation.
2. For metal edge restraints with top edge exposed, drive stakes at least 1 inch (25 mm) below top edge.
3. Where pavers set in mortar bed are indicated as edge restraints for pavers set in aggregate setting bed, install pavers set in mortar and allow mortar to cure before placing aggregate setting bed and remainder of pavers. Cut off mortar bed at a steep angle so it will not interfere with aggregate setting bed.

3.4 AGGREGATE SETTING-BED APPLICATIONS

A. Compact soil subgrade uniformly to at least 95 percent of laboratory density.

B. Proof-roll prepared subgrade to identify soft pockets and areas of excess yielding. Excavate soft spots, unsatisfactory soils, and areas of excessive pumping or rutting, as determined by Architect, and replace with compacted backfill or fill as directed.

C. Place separation geotextile over prepared subgrade, overlapping ends and edges at least 12 inches (300 mm).

D. Place aggregate subbase and base, compact by tamping with plate vibrator, and screed to depth indicated.

E. Place drainage geotextile over compacted base course, overlapping ends and edges at least 12 inches (300 mm).

F. Place leveling course and screed to a thickness of 1 to 1-1/2 inches (25 to 38 mm), taking care that moisture content remains constant and density is loose and uniform until pavers are set and compacted.

G. Treat leveling course with herbicide to inhibit growth of grass and weeds.

H. Set pavers with a minimum joint width of 1/16 inch (1.5 mm) and a maximum of 1/8 inch (3 mm), being careful not to disturb leveling base. If pavers have spacer bars, place pavers hand tight against spacer bars. Use string lines to keep straight lines. Fill gaps between units that exceed 3/8 inch (10 mm) with pieces cut to fit from full-size unit pavers.

I. Vibrate pavers into leveling course with a low-amplitude plate vibrator capable of a 3500- to 5000-lbf (16- to 22-kN) compaction force at 80 to 90 Hz. Use vibrator with neoprene mat on face of plate or other means as needed to prevent cracking and chipping of pavers. Perform at least three passes across paving with vibrator.

1. Compact pavers when there is sufficient surface to accommodate operation of vibrator, leaving at least 36 inches (900 mm) of uncompacted pavers adjacent to temporary edges.
2. Before ending each day's work, compact installed concrete pavers except for 36-inch (900-mm) width of uncompacted pavers adjacent to temporary edges (laying faces).
3. As work progresses to perimeter of installation, compact installed pavers that are adjacent to permanent edges unless they are within 36 inches (90 mm) of laying face.
4. Before ending each day's work and when rain interrupts work, cover pavers that have not been compacted and cover leveling course on which pavers have not been placed with nonstaining plastic sheets to protect them from rain.

J. Spread dry sand and fill joints immediately after vibrating pavers into leveling course. Vibrate pavers and add sand until joints are completely filled, then remove excess sand. Leave a slight surplus of sand on the surface for joint filling.

K. Do not allow traffic on installed pavers until sand has been vibrated into joints.

L. Repeat joint-filling process 30 days later.

CONFORMED

3.5 REPAIRING, POINTING, AND CLEANING

A. Remove and replace unit pavers that are loose, chipped, broken, stained, or otherwise damaged or that do not match adjoining units. Provide new units to match adjoining units and install in same manner as original units, with same joint treatment and with no evidence of replacement.

END OF SECTION

CONFORMED

SECTION 32 1713

PARKING BUMPERS

PART 1 GENERAL

1.1 RELATED DOCUMENTS

A. Drawings and general provisions of the Contract, including General and Supplementary Conditions and Division 01 Specification Sections, apply to this Section.

1.2 SUMMARY

A. Section includes wheel stops.

1.3 ACTION SUBMITTALS

A. Product Data: For each type of product.

B. Sustainable Design Submittals:

C. Samples for Initial Selection: For each type of exposed finish requiring color selection.

D. Samples for Verification: For wheel stops, 6 inches long, showing color and cross section; with fasteners.

PART 2 PRODUCTS

2.1 PARKING BUMPERS

A. Concrete Wheel Stops: Precast, steel-reinforced, air-entrained concrete, 4000-psi minimum compressive strength, 4-1/2 inches high by 9 inches wide by 72 inches long. Provide chamfered corners, transverse drainage slots on underside, and a minimum of two factory-formed or -drilled vertical holes through wheel stop for anchoring to substrate.
   1. Surface Appearance: Free of pockets, sand streaks, honeycombs, and other obvious defects. Corners shall be uniform, straight, and sharp.
   2. Mounting Hardware: Galvanized-steel spike or dowel, 1/2-inch diameter, 10-inch minimum length.

PART 3 EXECUTION

3.1 EXAMINATION

A. Verify that pavement is in suitable condition to begin installation according to manufacturer's written instructions.

B. Proceed with installation only after unsatisfactory conditions have been corrected.

3.2 INSTALLATION

A. General: Install wheel stops according to manufacturer's written instructions unless otherwise indicated.

B. Install wheel stops in bed of adhesive before anchoring.

CONFORMED

C. Securely anchor wheel stops to pavement with hardware in each preformed vertical hole in wheel stop as recommended in writing by manufacturer. Recess head of hardware beneath top of wheel stop.

END OF SECTION

CONFORMED

SECTION 32 1723

PAVEMENT MARKINGS

PART 1 GENERAL

1.1 RELATED DOCUMENTS

A. Drawings and general provisions of the Contract, including General and Supplementary Conditions and Division 01 Specification Sections, apply to this Section.

1.2 SUMMARY

A. Section includes painted markings applied to concrete pavement.

1.3 PREINSTALLATION MEETINGS

A. Preinstallation Conference: Conduct conference at Project site.
   1. Review methods and procedures related to marking pavement including, but not limited to, the following:
      a. Pavement aging period before application of pavement markings.
      b. Review requirements for protecting pavement markings, including restriction of traffic during installation period.

1.4 ACTION SUBMITTALS

A. Product Data: For each type of product.
   1. Include technical data and tested physical and performance properties.

B. Shop Drawings: For pavement markings.
   1. Indicate pavement markings, colors, lane separations, defined parking spaces, and dimensions to adjacent work.
   2. Indicate, with international symbol of accessibility, spaces allocated for people with disabilities.

C. Samples: For each exposed product and for each color and texture specified; on rigid backing, 8 inches square.

1.5 QUALITY ASSURANCE

A. Regulatory Requirements: Comply with materials, workmanship, and other applicable requirements of Section 84 “Traffic Stripes and Pavement Markings” of the Caltrans Standard Specifications for pavement-marking work.
   1. Measurement and payment provisions and safety program submittals included in standard specifications do not apply to this Section.

1.6 FIELD CONDITIONS

A. Environmental Limitations: Proceed with pavement marking only on clean, dry surfaces and at a minimum ambient or surface temperature of 40 deg F for alkyd materials, and not exceeding 95 deg F.

PART 2 PRODUCTS

2.1 PAVEMENT-MARKING PAINT

A. Pavement-Marking Paint shall comply with the requirements of Section 84 of the Caltrans Standard Specifications.

CONFORMED

PART 3 EXECUTION

3.1 EXAMINATION

A. Verify that pavement is dry and in suitable condition to begin pavement marking according to manufacturer's written instructions.

B. Proceed with pavement marking only after unsatisfactory conditions have been corrected.

3.2 PAVEMENT MARKING

A. Do not apply pavement-marking paint until layout, colors, and placement have been verified with Architect.

B. Allow paving to age for a minimum of 30 days before starting pavement marking.

C. Sweep and clean surface to eliminate loose material and dust.

D. Apply paint with mechanical equipment to produce pavement markings, of dimensions indicated, with uniform, straight edges. Apply at manufacturer's recommended rates to provide a minimum wet film thickness of 15 mils.
   1. Apply graphic symbols and lettering with paint-resistant, die-cut stencils, firmly secured to pavement. Mask an extended area beyond edges of each stencil to prevent paint application beyond the stencil. Apply paint so that it cannot run beneath the stencil.
   2. Broadcast glass beads uniformly into wet markings at a rate of 6 lb/gal.

3.3 PROTECTING AND CLEANING

A. Protect pavement markings from damage and wear during remainder of construction period.

B. Clean spillage and soiling from adjacent construction using cleaning agents and procedures recommended by manufacturer of affected construction.

END OF SECTION

CONFORMED

SECTION 321726

TACTILE WARNING SURFACING

PART 1 GENERAL

1.1 RELATED DOCUMENTS

A. Drawings and general provisions of the Contract, including General and Supplementary Conditions and Division 01 Specification Sections, apply to this Section.

1.2 SUMMARY

A. Section Includes:
1. Cast-in-place detectable warning tiles.
2. Surface-applied detectable warning tiles.
3. Detectable warning mats.

B. Related Requirements:
1. Section 321313 "Concrete Paving" for concrete walkways serving as substrates for tactile warning surfacing.

1.3 ACTION SUBMITTALS

A. Product Data: For each type of product.

B. Samples for Initial Selection: For each type of exposed finish requiring color selection.

C. Samples for Verification: For each type of tactile warning surface, in manufacturer's standard sizes unless otherwise indicated, showing edge condition, truncated-dome pattern, texture, color, and cross section; with fasteners and anchors.

1.4 CLOSEOUT SUBMITTALS

A. Maintenance Data: For tactile warning surfacing, to include in maintenance manuals.

1.5 QUALITY ASSURANCE

A. Mockups: Build mockups to verify selections made under Sample submittals, to demonstrate aesthetic effects, and to set quality standards for materials and execution.
1. Subject to compliance with requirements, approved mockups may become part of the completed Work if undisturbed at time of Substantial Completion.

1.6 PREINSTALLATION MEETINGS

A. Preinstallation Conference: Conduct conference at Project site.

1.7 PROJECT CONDITIONS

A. Cold-Weather Protection: Do not use frozen materials or materials mixed or coated with ice or frost. Do not build on frozen subgrade or setting beds. Remove and replace unit paver work damaged by frost or freezing.

B. Weather Limitations for Adhesive Application:
1. Apply adhesive only when ambient temperature is above 50 deg F and when temperature has not been below 35 deg F for 12 hours immediately before application. Do not apply when substrate is wet or contains excess moisture.

C. Weather Limitations for Mortar and Grout:
   1. Cold-Weather Requirements: Comply with cold-weather construction requirements contained in ACI 530.1/ASCE 6/TMS 602.
   2. Hot-Weather Requirements: Comply with hot-weather construction requirements contained in ACI 530.1/ASCE 6/TMS 602. Provide artificial shade and windbreaks, and use cooled materials as required. Do not apply mortar to substrates with temperatures of 100 deg F and higher.
      a. When ambient temperature exceeds 100 deg F, or when wind velocity exceeds 8 mph and ambient temperature exceeds 90 deg F, set unit pavers within 1 minute of spreading setting-bed mortar.

1.8 WARRANTY

A. Special Warranty: Manufacturer agrees to repair or replace components of tactile warning surfaces that fail in materials or workmanship within specified warranty period.
   1. Failures include, but are not limited to, the following:
      a. Deterioration of finishes beyond normal weathering and wear.
      b. Separation or delamination of materials and components.
   2. Warranty Period: Five years from date of Substantial Completion.

PART 2 PRODUCTS

2.1 TACTILE WARNING SURFACING, GENERAL

A. Accessibility Requirements: Comply with applicable provisions in the U.S. Architectural & Transportation Barriers Compliance Board's ADA-ABA Accessibility Guidelines for Buildings and Facilities and ICC A117.1 for tactile warning surfaces.
   1. For tactile warning surfaces composed of multiple units, provide units that when installed provide consistent side-to-side and end-to-end dome spacing that complies with requirements.

B. Source Limitations: Obtain each type of tactile warning surfacing, joint material, setting material, anchor, and fastener from single source with resources to provide materials and products of consistent quality in appearance and physical properties.

2.2 DETECTABLE WARNING TILES

A. Cast-in-Place Detectable Warning Tiles: Accessible truncated-dome detectable warning tiles configured for setting flush in new concrete walkway surfaces, with slip-resistant surface treatment on domes and field of tile.
   1. Material: Cast-fiber-reinforced polymer concrete tile.
   2. Color: Safety yellow.
   3. Shapes and Sizes:
      a. Rectangular panel, as shown on plans.
   4. Dome Spacing and Configuration: 2.35-inch spacing, in square pattern.
   5. Mounting:
      a. Permanently embedded detectable warning tile wet-set into freshly poured concrete.
      b. Detectable warning tile set into formed recess in concrete and adhered with adhesive.
      c. Replaceable detectable warning tile wet-set into freshly poured concrete and surface-fastened to permanently embedded anchors.

B. Surface-Applied Detectable Warning Tiles: Accessible truncated-dome detectable warning concrete tiles configured for surface application on existing concrete walkway surfaces, with slip-resistant surface treatment on domes, field of tile, and beveled outside edges.
   1. Material: Cast-fiber-reinforced polymer concrete tile.
   2. Color: Safety yellow.
   3. Shapes and Sizes:
      a. Rectangular panel, as shown on plans.
   4. Dome Spacing and Configuration: 2.35-inch spacing, in square pattern.
   5. Mounting: Adhered to existing concrete walkway.

C. Cast-in-Place Detectable Warning Metal Tiles: Accessible truncated-dome detectable warning metal tiles configured for setting flush in new concrete walkway surfaces, with slip-resistant surface treatment on domes and field of tile.
   1. Material:
      a. Stainless-Steel Plate and Sheet: ASTM A 240/A 240M or ASTM A 666, Type 304.
         1) Finish and Color:
            a) Manufacturer's standard powder coat, safety yellow.
            b) Mill finish.
      b. Cast Iron: Gray iron, ASTM A 48/A 48M, CL 35.
   2. Shapes and Sizes:
      a. Rectangular panel, as shown on plans.
   3. Dome Spacing and Configuration: 2.35-inch spacing, in square pattern.
   4. Mounting:
      a. Permanently embedded detectable warning tile wet-set into freshly poured concrete.
      b. Permanently embedded detectable warning tile set into formed recess in concrete and adhered with adhesive.
      c. Replaceable embedded detectable warning tile fastened to permanently installed anchors.

D. Surface-Applied Detectable Warning Metal Tiles: Accessible truncated-dome detectable warning metal tiles or plates configured for fastening to surface of existing concrete walkway surfaces, with slip-resistant surface treatment on domes, field of tile, and beveled outside edges.
   1. Material: Stainless-Steel Plate and Sheet: ASTM A 240/A 240M or ASTM A 666, Type 304.
   2. Finish and Color:
      a. Manufacturer's standard powder coat, safety yellow.
      b. Mill finish.
   3. Shapes and Sizes:
      a. Rectangular panel, as shown on plans.
   4. Dome Spacing and Configuration: 2.35-inch spacing, in square pattern.
   5. Mounting:
      a. Replaceable surface-applied detectable warning tile fastened with permanently installed anchors to existing concrete walkway.
      b. Permanently fixed detectable warning tile adhered to existing concrete walkway.

2.3 DETECTABLE WARNING MATS

A. Surface-Applied Detectable Warning Mats: Accessible truncated-dome detectable warning resilient mats, UV resistant, manufactured for adhering to existing concrete walkway surfaces, with slip-resistant surface treatment on domes, field of mat, and beveled outside edges.
   1. Material: Modified rubber compound, UV resistant.
   2. Color: safety yellow.
   3. Shapes and Sizes:
      a. Rectangular panel, as shown on plans.
   4. Dome Spacing and Configuration: 2.35-inch spacing, in square pattern.
   5. Mounting: Adhered to pavement surface with adhesive and fastened with fasteners.

2.4 ACCESSORIES

A. Fasteners and Anchors: Manufacturer's standard as required for secure anchorage of tactile warning surfaces, noncorrosive and compatible with each material joined, and complying with the following:
   1. Furnish Type 304 stainless-steel fasteners for exterior use.
   2. Fastener Heads: For nonstructural connections, use flathead or oval countersunk screws and bolts with tamper-resistant heads, colored to match tile.

B. Adhesive: As recommended by manufacturer for adhering tactile warning surfacing unit to pavement.

C. Sealant: As recommended by manufacturer for sealing perimeter of tactile warning surfacing unit.

PART 3 EXECUTION

3.1 EXAMINATION

A. Verify that pavement is in suitable condition to begin installation according to manufacturer's written instructions. Verify that installation of tactile warning surfacing will comply with accessibility requirements upon completion.

B. Proceed with installation only after unsatisfactory conditions have been corrected.

3.2 INSTALLATION OF TACTILE WARNING SURFACING

A. General: Prepare substrate and install tactile warning surfacing according to manufacturer's written instructions unless otherwise indicated.

B. Place tactile warning surfacing units in dimensions and orientation indicated. Comply with location requirements of AASHTO MP 12.

3.3 INSTALLATION OF DETECTABLE WARNING TILES

A. Cast-in-Place Detectable Warning Tiles:
1. Concrete Paving Installation: Comply with installation requirements in Section 321313 "Concrete Paving." Mix, place, and finish concrete to conditions complying with detectable warning tile manufacturer's written requirements for satisfactory embedment of tile.
2. Set each detectable warning tile accurately and firmly in place and completely seat tile back and embedments in wet concrete by tamping or vibrating. If necessary, temporarily apply weight to tiles to ensure full contact with concrete.
3. Set surface of tile flush with surrounding concrete and adjacent tiles, with variations between tiles and between concrete and tiles not exceeding plus or minus 1/8 inch from flush.
4. Protect exposed surfaces of installed tiles from contact with wet concrete. Complete finishing of concrete paving surrounding tiles. Remove concrete from tile surfaces.
5. Clean tiles using methods recommended in writing by manufacturer.

B. Removable Cast-in-Place Detectable Warning Tiles:
1. Concrete Paving Installation: Comply with installation requirements in Section 321313 "Concrete Paving." Mix, place, and finish concrete to conditions complying with detectable warning tile manufacturer's written requirements for satisfactory embedment of removable tile.
2. Set each detectable warning tile accurately and firmly in place with embedding anchors and fasteners attached, and firmly seat tile back in wet concrete by tamping or vibrating. If necessary, temporarily apply weight to tiles to ensure full contact with concrete.
3. Set surface of tile flush with surrounding concrete and adjacent tiles, with variations between tiles and between concrete and tiles not exceeding plus or minus 1/8 inch from flush.
4. Protect exposed surfaces of installed tiles from contact with wet concrete. Complete finishing of concrete paving surrounding tiles. Remove concrete from tile surfaces.
5. Clean tiles using methods recommended in writing by manufacturer.

C. Surface-Applied Detectable Warning Tiles:
1. Lay out detectable warning tiles as indicated and mark concrete pavement.
2. Prepare existing paving surface by grinding and cleaning as recommended by manufacturer.
   a. Cut perimeter kerf in existing concrete pavement to receive metal tile flange.
3. Apply adhesive to back of tiles in amounts and pattern recommended by manufacturer, and set tiles in place. Firmly seat tiles in adhesive bed, eliminating air pockets and establishing full adhesion to pavement. If necessary, temporarily apply weight to tiles to ensure full contact with concrete.
4. Install anchor devices through face of tiles and into pavement using anchors located as recommended by manufacturer. Set heads of anchors flush with top surface of mat.
5. Mask perimeter of tiles and adjacent concrete, and apply sealant in continuous bead around perimeter of tile installation.

6. Remove masking, adhesive, excess sealant, and soil from exposed surfaces of detectable warning tiles and surrounding concrete pavement using cleaning agents recommended in writing by manufacturer.
7. Protect installed tiles from traffic until adhesive has set.

3.4 INSTALLATION OF DETECTABLE WARNING MATS

A. Lay out detectable warning mats as indicated and mark concrete pavement at edges of mats.

B. Prepare existing paving surface by grinding and cleaning as recommended by manufacturer.

C. Apply adhesive to back of mat in amounts and pattern recommended by manufacturer, and set mat in place. Firmly seat mat in adhesive bed, eliminating air pockets and establishing full adhesion to pavement. If necessary, temporarily apply weight to mat to ensure full contact with adhesive.

D. Install anchor devices through face of mat and into pavement using anchors located as recommended by manufacturer. Set heads of anchors flush with mat surface.

E. Mask mat perimeter and adjacent concrete, and apply sealant in continuous bead around perimeter of mat.

F. Remove masking, adhesive, excess sealant, and soil from exposed surfaces of detectable warning mat and surrounding concrete pavement using cleaning agents recommended in writing by manufacturer.

G. Protect installed mat from traffic until adhesive has set.

3.5 INSTALLATION OF DETECTABLE WARNING UNIT PAVERS

A. Aggregate Setting-Bed Applications:
1. Place aggregate base, compact by tamping with plate vibrator, and screed to depth indicated.
2. Place leveling course and screed to a thickness of 1 to 1-1/2 inches, taking care that moisture content remains constant and density is loose and uniform until unit pavers are set and compacted.
3. Treat leveling course with herbicide to inhibit growth of grass and weeds.
4. Set unit pavers with a minimum joint width of 1/16 inch and a maximum of 1/8 inch, being careful not to disturb leveling base. If pavers have spacer bars, place pavers hand tight against spacer bars. Use string lines to keep straight lines.
5. Vibrate pavers into leveling course with a low-amplitude plate vibrator capable of a 3500- to 5000-lbf compaction force at 80 to 90 Hz.
6. Spread dry sand and fill joints immediately after vibrating pavers into leveling course. Vibrate pavers and add sand until joints are completely filled, then remove excess sand. Leave a slight surplus of sand on the surface for joint filling.

B. Mortar Setting-Bed Applications:
1. Saturate concrete subbase with clean water several hours before placing setting bed. Remove surface water about one hour before placing setting bed.
2. Apply mortar-bed bond coat over surface of concrete subbase about 15 minutes before placing mortar bed. Limit area of bond coat to avoid its drying out before placing setting bed. Do not exceed 1/16-inch thickness for bond coat.
3. Apply mortar bed over bond coat; spread and screed mortar bed to uniform thickness at subgrade elevations required for accurate setting of pavers to finished grades indicated.
4. Mix and place only that amount of mortar bed that can be covered with pavers before initial set. Before placing pavers, cut back, bevel edge, and remove and discard setting-bed material that has reached initial set.
5. Place pavers before initial set of cement occurs. Immediately before placing pavers on mortar bed, apply uniform 1/16-inch-thick bond coat to mortar bed or to back of each paver with a flat trowel.

6. Tamp or beat pavers with a wooden block or rubber mallet to obtain full contact with setting bed and to bring finished surfaces within indicated tolerances. Set each paver in a single operation before initial set of mortar; do not return to areas already set or disturb pavers for purposes of realigning finished surfaces or adjusting joints.
7. Spaced Joint Widths: Provide 3/8-inch nominal joint width with variations not exceeding plus or minus 1/16 inch.
8. Grouted Joints: Grout paver joints complying with ANSI A108.10. Grout joints as soon as possible after initial set of setting bed.
    a. Force grout into joints, taking care not to smear grout on adjoining surfaces.
    b. Tool exposed joints slightly concave when thumbprint hard.
    c. Cure grout by maintaining in a damp condition for seven days unless otherwise recommended by grout or liquid-latex manufacturer.
9. Remove excess grout from exposed paver surfaces; wash and scrub clean.
10. Protect installation from traffic until grout has set.

3.6 CLEANING AND PROTECTION

A. Remove and replace tactile warning surfacing that is broken or damaged or does not comply with requirements in this Section. Remove in complete sections from joint to joint unless otherwise approved by Architect. Replace using tactile warning surfacing installation methods acceptable to Architect.

B. Protect tactile warning surfacing from damage and maintain free of stains, discoloration, dirt, and other foreign material.

END OF SECTION

CONFORMED

SECTION 32 84 00

PLANTING IRRIGATION

PART 1 - GENERAL

1.1 SUMMARY

A. Section Includes:

1. Piping.
2. Pressure-reducing valves.
3. Automatic control valves.
4. Sprinklers.
5. Quick couplers.
6. Controllers.
7. Boxes for automatic control valves.

1.2 DEFINITIONS

A. Circuit Piping: Downstream from control valves to sprinklers, specialties, and drain valves. Piping is under pressure during flow.

B. Main Piping: Downstream from point of connection to water distribution piping to, and including, control valves. Piping is under water-distribution-system pressure.

C. Low Voltage: As defined in NFPA 70 for circuits and equipment operating at less than 50 V or for remote-control, signaling power-limited circuits.

1.3 ACTION SUBMITTALS

A. Product Data: For each type of product indicated. Include rated capacities, operating characteristics, and furnished specialties and accessories.

1.4 INFORMATIONAL SUBMITTALS

A. Zoning Chart: Show each irrigation zone and its control valve.

1.5 CLOSEOUT SUBMITTALS

A. Operation and Maintenance Data: For sprinklers controllers and automatic control valves to include in operation and maintenance manuals.

1.6 DELIVERY, STORAGE, AND HANDLING

A. Deliver piping with factory-applied end caps. Maintain end caps through shipping, storage, and handling to prevent pipe-end damage and to prevent entrance of dirt, debris, and moisture.

B. Store plastic piping protected from direct sunlight. Support to prevent sagging and bending.

1.7 PROJECT CONDITIONS

A. Interruption of Existing Water Service: Do not interrupt water service to facilities occupied by Owner or others unless permitted under the following conditions and then only after arranging to provide temporary water service according to requirements indicated:

1. Notify Owner no fewer than two days in advance of proposed interruption of water service.
2. Do not proceed with interruption of water service without Owner's written permission.

PART 2 - PRODUCTS

2.1 PIPES, TUBES, AND FITTINGS

A. Comply with requirements in the piping schedule for applications of pipe, tube, and fitting materials, and for joining methods for specific services, service locations, and pipe sizes.

B. PVC Pipe: ASTM D 1785, PVC 1120 compound, Schedule 40.

1. PVC Socket Fittings: ASTM D 2466, Schedule 40.
2. PVC Socket Unions: Construction similar to MSS SP-107, except both headpiece and tailpiece shall be PVC with socket ends.

C. PVC Pipe, Pressure Rated: ASTM D 2241, PVC 1120 compound.

1. PVC Socket Fittings: ASTM D 2467, Schedule 80.
2. PVC Socket Unions: Construction similar to MSS SP-107, except both headpiece and tailpiece shall be PVC with socket or threaded ends.

2.2 PIPING JOINING MATERIALS

A. Solvent Cements for Joining PVC Piping: ASTM D 2564. Include primer according to ASTM F 656.

2.3 MANUAL VALVES

A. Plastic Ball Valves:

1. Description:

    a. Standard: MSS SP-122.
    b. Pressure Rating: 125 psig (860 kPa) minimum.
    c. Body Material: PVC.
    d. Type: Union.
    e. End Connections: Socket or threaded.
    f. Port: Full.

B. Bronze Gate Valves:
1. Description:

    a. Standard: MSS SP-80, Type 2.
    b. Class: 125.
    c. CWP Rating: 200 psig (1380 kPa).
    d. Body Material: ASTM B 62 bronze with integral seat and screw-in bonnet.
    e. Ends: Threaded or solder joint.
    f. Stem: Bronze, nonrising.
    g. Disc: Solid wedge; bronze.
    h. Packing: Asbestos free.
    i. Handwheel: Malleable iron, bronze, or aluminum.

2.4 BUBBLERS

A. General Requirements: Designed for point source water delivery.

B. Bubblers:
1. Description:

    a. Body Material: ABS.
    b. Nozzle: ABS .

2.5 QUICK COUPLERS

A. Basis-of-Design Product: Subject to compliance with requirements, provide product indicated on Drawings or equal product:

    1. Hunter Industries Incorporated.

B. Description: Factory-fabricated, bronze or brass, two-piece assembly. Include coupler water-seal valve; removable upper body with spring-loaded or weighted, rubber-covered cap; hose swivel with ASME B1.20.7, 3/4-11.5NH threads for garden hose on outlet; and operating key.

    1. Locking-Top Option: Vandal-resistant locking feature. Include one matching key(s).

2.6 CONTROLLERS

A. Basis-of-Design Product: Subject to compliance with requirements, provide product indicated on Drawings or equal product:

1. Hunter Industries Incorporated.

2. John Deere Greentech – (Wireless Relay Assembly)

B. Description:

1. Controller Stations for Automatic Control Valves: Each station is variable from approximately **1-144** minutes. Include switch for manual or automatic operation of each station.
2. Exterior Control Enclosures: NEMA 250, Type 4, weatherproof, with locking cover and two matching keys; include provision for grounding.

a. Body Material: Stainless-steel sheet metal.
b. Mounting: Provide product indicated on Drawings or equal product.

PART 3 - EXECUTION

3.1 EARTHWORK

A. Excavating, trenching, and backfilling are specified in Section 312000 "Earth Moving."

B. Install warning tape directly above pressure piping, 12 inches (300 mm) below finished grades, except 6 inches (150 mm) below subgrade under pavement and slabs.

C. Drain Pockets: Excavate to sizes indicated. Backfill with cleaned gravel or crushed stone, graded from 3/4 to 3 inches (19 to 75 mm) , to 12 inches (300 mm) below grade. Cover gravel or crushed stone with sheet of asphalt-saturated felt and backfill remainder with excavated material.

D. Provide minimum cover over top of underground piping according to the following:

1. Irrigation Main Piping: Minimum depth of 24 inches below finished grade, or not less than 18 inches (450 mm) below average local frost depth, whichever is deeper.
2. Sleeves: 24 inches (600 mm) .

3.2 PREPARATION

A. Set stakes to identify locations of proposed irrigation system. Obtain Architect's approval before excavation.

3.3 PIPING INSTALLATION

A. Location and Arrangement: Drawings indicate location and arrangement of piping systems. Install piping as indicated unless deviations are approved on Coordination Drawings.

B. Install piping at minimum uniform slope of 0.5 percent down toward drain valves.

C. Install piping free of sags and bends.

D. Install groups of pipes parallel to each other, spaced to permit valve servicing.

E. Install fittings for changes in direction and branch connections.

F. Install flanges adjacent to valves and to final connections to other components with NPS 2-1/2 (DN 65) or larger pipe connection.

G. Install underground thermoplastic piping according to ASTM D 2774.

H. Install expansion loops in control-valve boxes for plastic piping.

I. Lay piping on solid subbase, uniformly sloped without humps or depressions.

J. Install PVC piping in dry weather when temperature is above 40 deg F (5 deg C). Allow joints to cure at least 24 hours at temperatures above 40 deg F (5 deg C) before testing.

K. Install piping in sleeves under parking lots, roadways, and sidewalks.

L. Install sleeves made of Schedule 40 PVC pipe and socket fittings, and solvent-cemented joints.

3.4 JOINT CONSTRUCTION

A. Ream ends of pipes and tubes and remove burrs. Bevel plain ends of steel pipe.

B. Remove scale, slag, dirt, and debris from inside and outside of pipe and fittings before assembly.

C. Threaded Joints: Thread pipe with tapered pipe threads according to ASME B1.20.1. Cut threads full and clean using sharp dies. Ream threaded pipe ends to remove burrs and restore full ID. Join pipe fittings and valves as follows:

1. Apply appropriate tape or thread compound to external pipe threads unless dry seal threading is specified.
2. Damaged Threads: Do not use pipe or pipe fittings with threads that are corroded or damaged. Do not use pipe sections that have cracked or open welds.

D. PVC Piping Solvent-Cemented Joints: Clean and dry joining surfaces. Join pipe and fittings according to the following:

1. Comply with ASTM F 402 for safe-handling practice of cleaners, primers, and solvent cements.
2. PVC Pressure Piping: Join schedule number, ASTM D 1785, PVC pipe and PVC socket fittings according to ASTM D 2672. Join other-than-schedule-number PVC pipe and socket fittings according to ASTM D 2855.
3. PVC Nonpressure Piping: Join according to ASTM D 2855.

3.5 VALVE INSTALLATION

A. Throttling Valves: Install in underground piping in boxes for automatic control valves.

3.6 BUBBLER INSTALLATION

A. Install after hydrostatic test is completed.

B. Install at manufacturer's recommended heights.

C. Locate to maintain a minimum distance of 4 inches (100 mm) from walls and 2 inches (50 mm) from other boundaries unless otherwise indicated.

3.7 AUTOMATIC IRRIGATION-CONTROL SYSTEM INSTALLATION

A. Equipment Mounting: Install exterior freestanding controllers on preformed plastic base.

1. Place and secure anchorage devices. Use setting drawings, templates, diagrams, instructions, and directions furnished with items to be embedded.
2. Install anchor bolts to elevations required for proper attachment to supported equipment.

B. Install control cable in same trench as irrigation piping and at least 2 inches (51 mm) below or beside piping. Provide conductors of size not smaller than recommended by controller manufacturer. Install cable in separate sleeve under paved areas.

3.8 CONNECTIONS

A. Comply with requirements for piping specified in Section 221113 "Facility Water Distribution Piping" for water supply from exterior water service piping, water meters, protective enclosures, and backflow preventers. Drawings indicate general arrangement of piping, fittings, and specialties.

B. Install piping adjacent to equipment, valves, and devices to allow service and maintenance.

C. Connect wiring between controllers and automatic control valves.

3.9 IDENTIFICATION

A. Identify system components. Comply with requirements for identification specified in Section 220553 "Identification for Plumbing Piping and Equipment."

B. Equipment Nameplates and Signs: Install engraved plastic-laminate equipment nameplates and signs on each automatic controller.

1. Text: In addition to identifying unit, distinguish between multiple units, inform operator of operational requirements, indicate safety and emergency precautions, and warn of hazards and improper operations.

C. Warning Tapes: Arrange for installation of continuous, underground, detectable warning tapes over underground piping during backfilling of trenches. See Section 312000 "Earth Moving" for warning tapes.

3.10 FIELD QUALITY CONTROL

A. Manufacturer's Field Service: Engage a factory-authorized service representative to inspect, test, and adjust components, assemblies, and equipment installations, including connections.

B. Perform tests and inspections.

1. Manufacturer's Field Service: Engage a factory-authorized service representative to inspect components, assemblies, and equipment installations, including connections, and to assist in testing.

C. Tests and Inspections:

1. Leak Test: After installation, charge system and test for leaks. Repair leaks and retest until no leaks exist.
2. Operational Test: After electrical circuitry has been energized, operate controllers and automatic control valves to confirm proper system operation.
3. Test and adjust controls and safeties. Replace damaged and malfunctioning controls and equipment.

D. Any irrigation product will be considered defective if it does not pass tests and inspections.

E. Prepare test and inspection reports.

3.11 STARTUP SERVICE

A. Perform startup service.

1. Verify that controllers are installed and connected according to the Contract Documents.
2. Verify that electrical wiring installation complies with manufacturer's submittal.

3.12 ADJUSTING

A. Adjust settings of controllers.

B. Adjust automatic control valves to provide flow rate at rated operating pressure required for each sprinkler circuit.

3.13 CLEANING

A. Flush dirt and debris from piping before installing sprinklers and other devices.

3.14 DEMONSTRATION

A. Train Owner's maintenance personnel to adjust, operate, and maintain automatic control valves and controllers.

3.15 PIPING SCHEDULE

A. Install components having pressure rating equal to or greater than system operating pressure.

B. Piping in control-valve boxes and aboveground may be joined with flanges or unions instead of joints indicated.

C. Underground irrigation main piping, NPS 4 (DN 100) and smaller , shall be the following:
   1. Schedule 40 , PVC pipe and socket fittings, and solvent-cemented joints.

D. Circuit piping shall be the following:
   1. Schedule 40, PVC pipe and socket fittings; and solvent-cemented joints.

END OF SECTION

CONFORMED

SECTION 32 93 00

PLANTS

PART 1 - GENERAL

1.1 SUMMARY

A. Section Includes:

1. Plants.
2. Tree stabilization.
3. Tree-watering devices.
4. Landscape edgings.
5. Tree grates.

1.2 DEFINITIONS

A. Backfill: The earth used to replace or the act of replacing earth in an excavation.

B. Container-Grown Stock: Healthy, vigorous, well-rooted plants grown in a container, with a well-established root system reaching sides of container and maintaining a firm ball when removed from container. Container shall be rigid enough to hold ball shape and protect root mass during shipping and be sized according to ANSI Z60.1 for type and size of plant required.

C. Finish Grade: Elevation of finished surface of planting soil.

D. Pesticide: A substance or mixture intended for preventing, destroying, repelling, or mitigating a pest. Pesticides include insecticides, miticides, herbicides, fungicides, rodenticides, and molluscicides. They also include substances or mixtures intended for use as a plant regulator, defoliant, or desiccant. Some sources classify herbicides separately from pesticides.

E. Pests: Living organisms that occur where they are not desired or that cause damage to plants, animals, or people. Pests include insects, mites, grubs, mollusks (snails and slugs), rodents (gophers, moles, and mice), unwanted plants (weeds), fungi, bacteria, and viruses.

F. Planting Area: Areas to be planted.

G. Planting Soil: Existing, on-site soil; imported soil; or manufactured soil that has been modified with soil amendments and perhaps fertilizers to produce a soil mixture best for plant growth. See Section 329113 "Soil Preparation" for drawing designations for planting soils.

H. Plant; Plants; Plant Material: These terms refer to vegetation in general, including trees, shrubs, vines, ground covers, ornamental grasses, bulbs, corms, tubers, or herbaceous vegetation.

I. Root Flare: Also called "trunk flare." The area at the base of the plant's stem or trunk where the stem or trunk broadens to form roots; the area of transition between the root system and the stem or trunk.

J. Stem Girdling Roots: Roots that encircle the stems (trunks) of trees below the soil surface.

K. Subgrade: The surface or elevation of subsoil remaining after excavation is complete, or the top surface of a fill or backfill before planting soil is placed.

1.3 ACTION SUBMITTALS

A. Product Data: For each type of product.

1. Plant Materials: Include quantities, sizes, quality, and sources for plant materials.

B. Samples for Verification: For each of the following:
1. Compost Mulch: 1-pint (0.5-L) volume of each organic mulch required; in sealed plastic bags labeled with composition of materials by percentage of weight and source of mulch. Each Sample shall be typical of the lot of material to be furnished; provide an accurate representation of color, texture, and organic makeup.
2. Mineral Mulch: 2 lb (1.0 kg) of each mineral mulch required, in sealed plastic bags labeled with source of mulch. Sample shall be typical of the lot of material to be delivered and installed on-site; provide an accurate indication of color, texture, and makeup of the material.

1.4 INFORMATIONAL SUBMITTALS

A. Product Certificates: For each type of manufactured product, from manufacturer, and complying with the following:

1. Manufacturer's certified analysis of standard products.
2. Analysis of other materials by a recognized laboratory made according to methods established by the Association of Official Analytical Chemists, where applicable.

B. Pesticides and Herbicides: Product label and manufacturer's application instructions specific to Project.

C. Sample Warranty: For special warranty.

1.5 CLOSEOUT SUBMITTALS

A. Maintenance Data: Recommended procedures to be established by Owner for maintenance of plants during a calendar year. Submit before expiration of required maintenance periods.

1.6 QUALITY ASSURANCE

A. Soil-Testing Laboratory Qualifications: An independent or university laboratory, recognized by the State Department of Agriculture, with the experience and capability to conduct the testing indicated and that specializes in types of tests to be performed.

B. Soil Analysis: For each unamended soil type, furnish soil analysis and a written report by a qualified soil-testing laboratory stating percentages of organic matter; gradation of sand, silt, and clay content; cation exchange capacity;deleterious material; pH; and mineral and plant-nutrient content of the soil.
   1. Testing methods and written recommendations shall comply with USDA's Handbook No. 60.
   2. The soil-testing laboratory shall oversee soil sampling; with depth, location, and number of samples to be taken per instructions from Architect. A minimum of one representative samples shall be taken from varied locations for each soil to be used or amended for planting purposes.
   3. Report suitability of tested soil for plant growth.
      a. Based upon the test results, state recommendations for soil treatments and soil amendments to be incorporated. State recommendations in weight per 1000 sq. ft. or volume per cu. yd. for nitrogen, phosphorus, and potash nutrients and soil amendments to be added to produce satisfactory planting soil suitable for healthy, viable plants.
      b. Report presence of problem salts, minerals, or heavy metals, including aluminum, arsenic, barium, cadmium, chromium, cobalt, lead, lithium, and vanadium. If such problem materials are present, provide additional recommendations for corrective action.

C. Provide quality, size, genus, species, and variety of plants indicated, complying with applicable requirements in ANSI Z60.1.

   1. Notify Architect of sources of planting materials seven days in advance of delivery to site.

1.7 DELIVERY, STORAGE, AND HANDLING

A. Packaged Materials: Deliver packaged materials in original, unopened containers showing weight, certified analysis, name and address of manufacturer, and indication of compliance with state and Federal laws if applicable.

B. Bulk Materials:

   1. Do not dump or store bulk materials near structures, utilities, walkways and pavements, or on existing turf areas or plants.
   2. Provide erosion-control measures to prevent erosion or displacement of bulk materials; discharge of soil-bearing water runoff; and airborne dust reaching adjacent properties, water conveyance systems, or walkways.
   3. Accompany each delivery of bulk materials with appropriate certificates.

C. Do not prune trees and shrubs before delivery. Protect bark, branches, and root systems from sun scald, drying, wind burn, sweating, whipping, and other handling and tying damage. Do not bend or bind-tie trees or shrubs in such a manner as to destroy

their natural shape. Provide protective covering of plants during shipping and delivery. Do not drop plants during delivery and handling.

D. Handle planting stock by root ball.

E. Deliver plants after preparations for planting have been completed, and install immediately. If planting is delayed more than six hours after delivery, set plants and trees in their appropriate aspect (sun, filtered sun, or shade), protect from weather and mechanical damage, and keep roots moist.

1. Shade and protect plants from the wind when stored outside.

2. Plants requiring shade shall be stored in a shady/filtered light location or under a temporary sunscreen.

3. Plants shall not be stored on paved surfaces (i.e. Asphalt, concrete pavers, etc.)

4. Protect plants stored on the project from drying out at all times by covering the balls or roots with moist sawdust, wood chips, shredded bark, peat moss, or other similar mulching material.

5. Keep plants, including those in containers, in a moist condition until planted, by watering with fine mist spray.
6. Set balled stock on ground and cover ball with soil, peat moss, sawdust, or other acceptable material.
7. Do not remove container-grown stock from containers before time of planting.
8. Water root systems of plants stored on-site deeply and thoroughly with a fine-mist spray. Water as often as necessary to maintain root systems in a moist, but not overly wet condition.

1.8 PROJECT CONDITIONS

A. Field Measurements: Verify actual grade elevations, service and utility locations, irrigation system components, and dimensions of plantings and construction contiguous with new plantings by field measurements before proceeding with planting work.

B. Interruption of Existing Services or Utilities: Do not interrupt services or utilities to facilities occupied by Owner or others unless permitted under the following conditions and then only after arranging to provide temporary services or utilities according to requirements indicated:
1. Notify Owner no fewer than two days in advance of proposed interruption of each service or utility.
2. Do not proceed with interruption of services or utilities without Owner's written permission.

C. Planting Restrictions: Plant during one of the following periods. Coordinate planting periods with maintenance periods to provide required maintenance from date of Substantial Completion.

1. Spring Planting: .
2. Fall Planting: .

D. Weather Limitations: Proceed with planting only when existing and forecasted weather conditions permit planting to be performed when beneficial and optimum results may be obtained. Apply products during favorable weather conditions according to manufacturer's written instructions and warranty requirements.

1.9 WARRANTY

A. Special Warranty: Installer agrees to repair or replace plantings and accessories that fail in materials, workmanship, or growth within specified warranty period.

1. Failures include, but are not limited to, the following:

   a. Death and unsatisfactory growth, except for defects resulting from abuse, lack of adequate maintenance, or neglect by Owner, or incidents that are beyond Contractor’s control.
   b. Structural failures including plantings falling or blowing over.
   c. Faulty performance of tree stabilization edgings and tree grates .
   d. Deterioration of metals, metal finishes, and other materials beyond normal weathering.

2. Warranty Periods: From date of Substantial Completion .

   a. Trees, Shrubs, Vines, and Ornamental Grasses: 12 months.
   b. Ground Covers, Biennials, Perennials, and Other Plants: 12 months.

3. Include the following remedial actions as a minimum:

   a. Immediately remove dead plants and replace unless required to plant in the succeeding planting season.
   b. Replace plants that are more than 25 percent dead or in an unhealthy condition at end of warranty period.
   c. A limit of one replacement of each plant is required except for losses or replacements due to failure to comply with requirements.

1.10 MAINTENANCE SERVICE

A. Initial Plant Establishment: Provide maintenance by skilled employees of landscape Installer. Maintain as required in Part 3. Begin maintenance immediately after plants are installed and continue until plantings are acceptably healthy and well established but for not less than period below.

1. Establishment Period: 2 months from date of planting completion.

B. Initial Maintenance Service for Plants: Provide maintenance by skilled employees of landscape Installer. Maintain as required in Part 3. Begin maintenance immediately after establishment but for not less than maintenance period below.

1. Maintenance Period: 2 months from date of establishment period completion.

PART 2 - PRODUCTS

2.1 PLANT MATERIAL

A. General: Furnish nursery-grown plants true to genus, species, variety, cultivar, stem form, shearing, and other features indicated in Plant List, Plant Schedule, or Plant Legend indicated on Drawings and complying with ANSI Z60.1; and with healthy root systems developed by transplanting or root pruning. Provide well-shaped, fully branched, healthy, vigorous stock, densely foliated when in leaf and free of disease, pests, eggs, larvae, and defects such as knots, sun scald, injuries, abrasions, and disfigurement.

1. Trees with damaged, crooked, or multiple leaders; tight vertical branches where bark is squeezed between two branches or between branch and trunk ("included bark"); crossing trunks; cut-off limbs more than 3/4 inch (19 mm) in diameter; or with stem girdling roots are unacceptable.
2. Collected Stock: Do not use plants harvested from the wild, from native stands, from an established landscape planting, or not grown in a nursery unless otherwise indicated.

B. Provide plants of sizes, grades, and ball or container sizes complying with ANSI Z60.1 for types and form of plants required. Plants of a larger size may be used if acceptable to Architect, with a proportionate increase in size of roots or balls.

C. Root-Ball Depth: Furnish trees and shrubs with root balls measured from top of root ball, which begins at root flare according to ANSI Z60.1. Root flare shall be visible before planting.

D. Labeling: Label at least one plant of each variety, size, and caliper with a securely attached, waterproof tag bearing legible designation of common name and full scientific name, including genus and species. Include nomenclature for hybrid, variety, or cultivar, if applicable for the plant.

E. If formal arrangements or consecutive order of plants is indicated on Drawings, select stock for uniform height and spread, and number the labels to assure symmetry in planting.

2.2 FERTILIZERS

A. Commercial Fertilizer: Commercial-grade complete fertilizer of neutral character, consisting of fast- and slow-release nitrogen, 50 percent derived from natural organic

sources of urea formaldehyde, phosphorous, and potassium in the following composition:

1. Composition: 1 lb/1000 sq. ft. of actual nitrogen, 4 percent phosphorous, and 2 percent potassium, by weight.

2. Composition: Nitrogen, phosphorous, and potassium in amounts recommended in soil reports from a qualified soil-testing laboratory.

B. Slow-Release Fertilizer: Granular or pelleted fertilizer consisting of 50 percent water-insoluble nitrogen, phosphorus, and potassium in the following composition:

1. Composition: 20 percent nitrogen, 10 percent phosphorous, and 10 percent potassium, by weight.

2. Composition: Nitrogen, phosphorous, and potassium in amounts recommended in soil reports from a qualified soil-testing laboratory.

C. Planting Tablets: Tightly compressed chip-type, long-lasting, slow-release, commercial-grade planting fertilizer in tablet form. Tablets shall break down with soil bacteria, converting nutrients into a form that can be absorbed by plant roots.
1. Nutrient Composition: 20 percent nitrogen, 10 percent phosphorous, and 5 percent potassium, by weight plus micronutrients.

2.3 PLANTING SOILS

A. Planting Soil: Existing, in-place surface soil. Verify suitability of existing surface soil to produce viable planting soil. Remove stones, roots, plants, sod, clods, clay lumps, pockets of coarse sand, concrete slurry, concrete layers or chunks, cement, plaster, building debris, and other extraneous materials harmful to plant growth. Mix surface soil with soil amendments as specified in soils lab reports.

2.4 MULCHES

A. Organic Mulch: Free from deleterious materials and suitable as a top dressing of trees and shrubs, consisting of one of the following:

1. Type: Ground or shredded bark .
2. Size Range: 3 inches (76 mm) maximum, 1/2 inch (13 mm) minimum .
3. Color: Natural.

B. Compost Mulch: Well-composted, stable, and weed-free organic matter, pH of 5.5 to 8; moisture content 35 to 55 percent by weight; 100 percent passing through a 1-inch (25-mm) sieve; soluble-salt content of 2 to 5 dS/m; not exceeding 0.5 percent inert contaminants and free of substances toxic to plantings; and as follows:

1. Organic Matter Content: 50 to 60 percent of dry weight.

2.5 PESTICIDES

A. General: Pesticide registered and approved by the EPA, acceptable to authorities having jurisdiction, and of type recommended by manufacturer for each specific problem and as required for Project conditions and application. Do not use restricted pesticides unless authorized in writing by authorities having jurisdiction.

B. Pre-Emergent Herbicide (Selective and Nonselective): Effective for controlling the germination or growth of weeds within planted areas at the soil level directly below the mulch layer.

C. Post-Emergent Herbicide (Selective and Nonselective): Effective for controlling weed growth that has already germinated.

2.6 TREE-STABILIZATION MATERIALS

A. Stakes and Guys:

1. Upright and Guy Stakes: Rough-sawn, sound, new hardwood, free of knots, holes, cross grain, and other defects, 2-by-2-inch nominal (38-by-38-mm actual) by length indicated, pointed at one end.

2.7 MISCELLANEOUS PRODUCTS

A. Wood Pressure-Preservative Treatment: AWPA U1, Use Category UC4a; acceptable to authorities having jurisdiction, and containing no arsenic or chromium.

B. Burlap: Non-synthetic, biodegradable.

C. Planter Drainage Gravel: Washed, sound crushed stone or gravel complying with ASTM D 448 for Size No. 8.

D. Planter Filter Fabric: Nonwoven geotextile manufactured for separation applications and made of polypropylene, polyolefin, or polyester fibers or combination of them.

E. Mycorrhizal Fungi: Dry, granular inoculant containing at least 5300 spores per lb (0.45 kg) of vesicular-arbuscular mycorrhizal fungi and 95 million spores per lb (0.45 kg) of ectomycorrhizal fungi, 33 percent hydrogel, and a maximum of 5.5 percent inert material.

PART 3 - EXECUTION

3.1 EXAMINATION

A. Examine areas to receive plants, with Installer present, for compliance with requirements and conditions affecting installation and performance of the Work.

1. Verify that no foreign or deleterious material or liquid such as paint, paint washout, concrete slurry, concrete layers or chunks, cement, plaster, oils,

gasoline, diesel fuel, paint thinner, turpentine, tar, roofing compound, or acid has been deposited in soil within a planting area.

2. Verify that plants and vehicles loaded with plants can travel to planting locations with adequate overhead clearance.
3. Suspend planting operations during periods of excessive soil moisture until the moisture content reaches acceptable levels to attain the required results.
4. Uniformly moisten excessively dry soil that is not workable or which is dusty.

B. If contamination by foreign or deleterious material or liquid is present in soil within a planting area, remove the soil and contamination as directed by Architect and replace with new planting soil.

C. Proceed with installation only after unsatisfactory conditions have been corrected.

3.2 PREPARATION

A. Protect structures, utilities, sidewalks, pavements, and other facilities and turf areas and existing plants from damage caused by planting operations.

B. Install erosion-control measures to prevent erosion or displacement of soils and discharge of soil-bearing water runoff or airborne dust to adjacent properties and walkways.

C. Apply antidesiccant to trees and shrubs using power spray to provide an adequate film over trunks (before wrapping), branches, stems, twigs, and foliage to protect during digging, handling, and transportation.

1. If deciduous trees or shrubs are moved in full leaf, spray with antidesiccant at nursery before moving and again two weeks after planting.

D. Lay out individual tree and shrub locations and areas for multiple plantings. Stake locations, outline areas, adjust locations when requested, and obtain Architect's acceptance of layout before excavating or planting. Make minor adjustments as required.

E. Lay out plants at locations directed by Architect. Stake locations of individual trees and shrubs and outline areas for multiple plantings.

3.3 PLANTING AREA ESTABLISHMENT

A. Finish Grading: Grade planting areas to a smooth, uniform surface plane with loose, uniformly fine texture. Roll and rake, remove ridges, and fill depressions to meet finish grades.

B. Before planting, obtain Architect's acceptance of finish grading; restore planting areas if eroded or otherwise disturbed after finish grading.

3.4 EXCAVATION FOR TREES AND SHRUBS

A. Planting Pits and Trenches: Excavate circular planting pits.

1. Excavate planting pits with sides sloping inward at a 45-degree angle. Excavations with vertical sides are unacceptable. Trim perimeter of bottom leaving center area of bottom raised slightly to support root ball and assist in drainage away from center. Do not further disturb base. Ensure that root ball will sit on undisturbed base soil to prevent settling. Scarify sides of planting pit smeared or smoothed during excavation.
2. Excavate approximately three times as wide as ball diameter for container-grown stock.
3. Do not excavate deeper than depth of the root ball, measured from the root flare to the bottom of the root ball.
4. If area under the plant was initially dug too deep, add soil to raise it to the correct level and thoroughly tamp the added soil to prevent settling.
5. Maintain required angles of repose of adjacent materials as shown on the Drawings. Do not excavate subgrades of adjacent paving, structures, hardscapes, or other new or existing improvements.
6. Maintain supervision of excavations during working hours.
7. Keep excavations covered or otherwise protected when unattended by Installer's personnel.
8. If drain tile is indicated on Drawings or required under planting areas, excavate to top of porous backfill over tile.

B. Backfill Soil: Subsoil and topsoil removed from excavations may be used as backfill soil unless otherwise indicated.

C. Obstructions: Notify Architect if unexpected rock or obstructions detrimental to trees or shrubs are encountered in excavations.

D. Drainage: Notify Architect if subsoil conditions evidence unexpected water seepage or retention in tree or shrub planting pits.

3.5 TREE, SHRUB, AND VINE PLANTING

A. Before planting, verify that root flare is visible at top of root ball according to ANSI Z60.1. If root flare is not visible, remove soil in a level manner from the root ball to where the top-most root emerges from the trunk. After soil removal to expose the root flare, verify that root ball still meets size requirements.

B. Roots: Remove stem girdling roots and kinked roots. Remove injured roots by cutting cleanly; do not break.

C. Container-Grown Stock: Set each plant plumb and in center of planting pit or trench with root flare 1 inch (25 mm) above adjacent finish grades.

1. Backfill: Planting soil. For trees, use excavated soil for backfill.
2. Carefully remove root ball from container without damaging root ball or plant.
3. Backfill around root ball in layers, tamping to settle soil and eliminate voids and air pockets. When planting pit is approximately one-half filled, water thoroughly before placing remainder of backfill. Repeat watering until no more water is absorbed.

4. Place planting tablets equally distributed around each planting pit when pit is approximately one-half filled. Place tablets beside the root ball about 1 inch (25 mm) from root tips; do not place tablets in bottom of the hole.

   a. Quantity: As indicated on Drawings.

5. Continue backfilling process. Water again after placing and tamping final layer of soil.

D. When planting on slopes, set the plant so the root flare on the uphill side is flush with the surrounding soil on the slope; the edge of the root ball on the downhill side will be above the surrounding soil. Apply enough soil to cover the downhill side of the root ball.

3.6 TREE, SHRUB, AND VINE PRUNING

A. Remove only dead, dying, or broken branches. Do not prune for shape.

B. Prune, thin, and shape trees, shrubs, and vines as directed by Architect.

C. Prune, thin, and shape trees, shrubs, and vines according to standard professional horticultural and arboricultural practices. Unless otherwise indicated by Architect, do not cut tree leaders; remove only injured, dying, or dead branches from trees and shrubs; and prune to retain natural character.

D. Do not apply pruning paint to wounds.

3.7 TREE STABILIZATION

A. Install trunk stabilization as follows unless otherwise indicated:

1. Upright Staking and Tying: Stake trees of 2- through 5-inch (50- through 125-mm) caliper. Stake trees of less than 2-inch (50-mm) caliper only as required to prevent wind tip out. Use a minimum of two stakes of length required to penetrate at least 18 inches (450 mm) below bottom of backfilled excavation and to extend to the dimension indicated on Drawings above grade. Set vertical stakes and space to avoid penetrating root balls or root masses.
2. Support trees with bands of flexible ties at contact points with tree trunk. Allow enough slack to avoid rigid restraint of tree.

3.8 ROOT-BARRIER INSTALLATION

A. Install root barrier where trees are planted within 60 inches (1500 mm) of paving or other hardscape elements, such as walls, curbs, and walkways, unless otherwise indicated on Drawings.

B. Align root barrier vertically, and run it linearly along and adjacent to the paving or other hardscape elements to be protected from invasive roots.

3.9 GROUND COVER AND PLANT PLANTING

A. Set out and space ground cover and plants other than trees, shrubs, and vines as indicated on Drawings in even rows with triangular spacing.

B. Dig holes large enough to allow spreading of roots.

C. Work soil around roots to eliminate air pockets and leave a slight saucer indentation around plants to hold water.

D. Water thoroughly after planting, taking care not to cover plant crowns with wet soil.

E. Protect plants from hot sun and wind; remove protection if plants show evidence of recovery from transplanting shock.

3.10 PLANTING AREA MULCHING

A. Mulch backfilled surfaces of planting areas and other areas indicated.

1. Trees in Turf Areas: Apply organic mulch ring of 3-inch (75-mm) average thickness, with 60-inch (900-mm) radius around trunks or stems. Do not place mulch within 3 inches (75 mm) of trunks or stems.
2. Organic Mulch in Planting Areas: Apply 3-inch (75-mm) average thickness of organic mulch over whole surface of planting area, and finish level with adjacent finish grades. Do not place mulch within 3 inches (75 mm) of trunks or stems.

3.11 TREE GRATE INSTALLATION

A. Tree Grates: Install according to manufacturer's written instructions. Set grate segments flush with adjoining surfaces. Shim from supporting substrate with soil-resistant plastic. Maintain a 3-inch- (75-mm-) minimum growth radius around base of tree; break away portions of casting, if necessary, according to manufacturer's written instructions.

3.12 PLANT MAINTENANCE

A. Maintain plantings by pruning, cultivating, watering, weeding, fertilizing, mulching, restoring planting saucers, adjusting and repairing tree-stabilization devices, resetting to proper grades or vertical position, and performing other operations as required to establish healthy, viable plantings. Spray or treat as required to keep trees and shrubs free of insects and disease.

B. Fill in, as necessary, soil subsidence that may occur because of settling or other processes. Replace mulch materials damaged or lost in areas of subsidence.

C. Apply treatments as required to keep plant materials, planted areas, and soils free of pests and pathogens or disease. Use integrated pest management practices when possible to minimize use of pesticides and reduce hazards. Treatments include

physical controls such as hosing off foliage, mechanical controls such as traps, and biological control agents.

3.13 PESTICIDE APPLICATION

A. Apply pesticides and other chemical products and biological control agents according to authorities having jurisdiction and manufacturer's written recommendations. Coordinate applications with Owner's operations and others in proximity to the Work. Notify Owner before each application is performed.

B. Pre-Emergent Herbicides (Selective and Nonselective): Apply to tree, shrub, and ground-cover areas according to manufacturer's written recommendations. Do not apply to seeded areas.

C. Post-Emergent Herbicides (Selective and Nonselective): Apply only as necessary to treat already-germinated weeds and according to manufacturer's written recommendations.

3.14 REPAIR AND REPLACEMENT

A. General: Repair or replace existing or new trees and other plants that are damaged by construction operations, in a manner approved by Architect.

1. Submit details of proposed pruning and repairs.
2. Perform repairs of damaged trunks, branches, and roots within 24 hours, if approved.
3. Replace trees and other plants that cannot be repaired and restored to full-growth status, as determined by Architect.

B. Remove and replace trees that are more than 25 percent dead or in an unhealthy condition before the end of the corrections period or are damaged during construction operations that Architect determines are incapable of restoring to normal growth pattern.

1. Provide new trees of same size as those being replaced for each tree of 6 inches (150 mm) or smaller in caliper size.
2. Provide one new tree(s) of 6-inch (150-mm) caliper size for each tree being replaced that measures more than 6 inches (150 mm) in caliper size.
3. Species of Replacement Trees: Same species being replaced.

3.15 CLEANING AND PROTECTION

A. During planting, keep adjacent paving and construction clean and work area in an orderly condition. Clean wheels of vehicles before leaving site to avoid tracking soil onto roads, walks, or other paved areas.

B. Remove surplus soil and waste material including excess subsoil, unsuitable soil, trash, and debris and legally dispose of them off Owner's property.

C. Protect plants from damage due to landscape operations and operations of other contractors and trades. Maintain protection during installation and maintenance periods. Treat, repair, or replace damaged plantings.

D. After installation and before Substantial Completion , remove nursery tags, nursery stakes, tie tape, labels, wire, burlap, and other debris from plant material, planting areas, and Project site.

3.16 DISPOSAL

A. Remove surplus soil and waste material including excess subsoil, unsuitable soil, trash, and debris and legally dispose of them off Owner’s property.

END OF SECTION

CONFORMED

SECTION 33 4100

STORM UTILITY DRAINAGE PIPING

PART 1 GENERAL

1.1 RELATED DOCUMENTS

A. Drawings and general provisions of the Contract, including General and Supplementary Conditions and Division 01 Specification Sections, apply to this Section.

B. Section 51, “Concrete Structures,” Section 64, “Plastic Pipe”, Section 70, “Miscellaneous Drainage Facilities”, Section 75, “Miscellaneous Metal”, and Section 90, “Concrete” of the Caltrans Standard Specifications and City of Turlock Standard Specifications.

1.2 SUMMARY

A. Section Includes:
1. Pipe and fittings.
2. Nonpressure transition couplings.
3. Expansion joints and deflection fittings.
4. Drains.
5. Encasement for piping.
6. Manholes.
7. Catch basins.
8. Stormwater inlets.
9. Pipe outlets.

1.3 DEFINITIONS

A. FRP: Fiberglass-reinforced plastic.

1.4 ACTION SUBMITTALS

A. Product Data: For each type of product indicated.

B. Shop Drawings:
1. Manholes: Include plans, elevations, sections, details, frames, and covers.
2. Stormwater inlets: Include plans, elevations, sections, details, frames, covers, and grates.

1.5 DELIVERY, STORAGE, AND HANDLING

A. Do not store plastic manholes, pipe, and fittings in direct sunlight.

B. Protect pipe, pipe fittings, and seals from dirt and damage.

C. Handle manholes according to manufacturer's written rigging instructions.

D. Handle stormwater inlets according to manufacturer's written rigging instructions.

1.6 PROJECT CONDITIONS

A. Interruption of Existing Storm Drainage Service: Do not interrupt service to facilities occupied by Owner or others unless permitted under the following conditions and then only after arranging to provide temporary service according to requirements indicated:
1. Notify City no fewer than two days in advance of proposed interruption of service.
2. Do not proceed with interruption of service without City's written permission.

CONFORMED

PART 2 PRODUCTS

2.1 PIPE AND FITTINGS

A. Pipe and fittings shall comply with the requirements of Section 64 “Plastic Pipe”, of the Caltrans Standard Specifications and City of Turlock Standard Specifications.

2.2 DRAINS

A. Drains shall comply with the requirements of Section 70 “Miscellaneous Drainage Facilities”, of the Caltrans Standard Specifications and City of Turlock Standard Specifications.

2.3 MANHOLES

A. Manholes shall comply with the requirements of Section 51 “Concrete Structures”, Section 70 “Miscellaneous Drainage Facilities”, and Section 75 “Miscellaneous Metal” of the Caltrans Standard Specifications and City of Turlock Standard Specifications.

2.4 CONCRETE

A. Concrete shall comply with the requirements of Section 51 “Concrete Structures”, of the Caltrans Standard Specifications and City of Turlock Standard Specifications.

2.5 STORMWATER INLETS

A. Stormwater inlets shall comply with the requirements of Section 51, “Concrete Structures,” Section 70, “Miscellaneous Drainage Facilities”, Section 75, “Miscellaneous Metal”, and Section 90, “Concrete” of the Caltrans Standard Specifications and City of Turlock Standard Specifications.

2.6 PIPE OUTLETS

A. Riprap at Outfall: Broken, irregularly sized and shaped, graded stone according to NSSGA's "Quarried Stone for Erosion and Sediment Control."

B. Flared End Sections: Shall comply with Caltrans Standard Plan No, D94B.

C. Lockable Trash Guard: Galvanized metal trash guard for installation on Flared End Section shall be removable and lockable.

PART 3 EXECUTION

3.1 EARTHWORK

A. Earthwork shall comply with Section 14 “Trenching and Backfilling” of the City of Turlock Standard Specifications.

3.2 PIPING INSTALLATION

A. Pipe and Fittings shall comply with the requirements of Section 64 “Plastic Pipe”, of the Caltrans Standard Specifications and City of Turlock Standard Specifications.

3.3 DRAIN INSTALLATION

A. Drain installation shall comply with the requirements of Section 51, “Concrete Structures,” Section 70, “Miscellaneous Drainage Facilities”, Section 75, “Miscellaneous Metal”, and Section 90, “Concrete” of the Caltrans Standard Specifications and City of Turlock Standard Specifications.

3.4 MANHOLE INSTALLATION

A. Manhole installation shall comply with the requirements of Section 51, “Concrete Structures,” Section 70, “Miscellaneous Drainage Facilities”, Section 75, “Miscellaneous Metal”, and Section 90, “Concrete” of the Caltrans Standard Specifications and City of Turlock Standard Specifications.

3.5 STORMWATER INLET AND OUTLET INSTALLATION

A. Construct inlet head walls, aprons, and sides of reinforced concrete, as indicated.

B. Construct riprap of broken stone, as indicated.

C. Install outlets that spill onto grade, anchored with concrete, where indicated.

D. Install outlets that spill onto grade, with flared end sections that match pipe, where indicated.

E. Construct energy dissipaters at outlets, as indicated.

3.6 CONCRETE PLACEMENT

A. Place cast-in-place concrete according to ACI 318.

3.7 IDENTIFICATION

A. Arrange for installation of green warning tape directly over piping and at outside edge of underground structures.
   1. Use warning tape or detectable warning tape over ferrous piping.
   2. Use detectable warning tape over nonferrous piping and over edges of underground structures.

3.8 FIELD QUALITY CONTROL

A. Inspect interior of piping to determine whether line displacement or other damage has occurred. Inspect after approximately 24 inches of backfill is in place, and again at completion of Project.
   1. Submit separate reports for each system inspection.
   2. Defects requiring correction include the following:
      a. Alignment: Less than full diameter of inside of pipe is visible between structures.
      b. Deflection: Flexible piping with deflection that prevents passage of ball or cylinder of size not less than 92.5 percent of piping diameter.
      c. Damage: Crushed, broken, cracked, or otherwise damaged piping.
      d. Infiltration: Water leakage into piping.
      e. Exfiltration: Water leakage from or around piping.
   3. Replace defective piping using new materials, and repeat inspections until defects are within allowances specified.
   4. Reinspect and repeat procedure until results are satisfactory.

B. Test new piping systems, and parts of existing systems that have been altered, extended, or repaired, for leaks and defects.
   1. Do not enclose, cover, or put into service before inspection and approval.
   2. Test completed piping systems according to requirements of authorities having jurisdiction.
   3. Schedule tests and inspections by authorities having jurisdiction with at least 24 hours' advance notice.
   4. Submit separate report for each test.
   5. Gravity-Flow Storm Drainage Piping: Test according to requirements of authorities having jurisdiction, UNI-B-6, and the following:
      a. Exception: Piping with soiltight joints unless required by authorities having jurisdiction.
      b. Option: Test plastic piping according to ASTM F 1417.
      c. Option: Test concrete piping according to ASTM C 924.

CONFORMED

C. Leaks and loss in test pressure constitute defects that must be repaired.

D. Replace leaking piping using new materials, and repeat testing until leakage is within allowances specified.

3.9 CLEANING

A. Clean interior of piping of dirt and superfluous materials. Flush with water.

END OF SECTION

APPENDIX A

FEDERAL WAGE RATES

CONFORMED

General Decision Number: CA170029 03/10/2017 CA29

Superseded General Decision Number: CA20160029

State: California

Construction Types: Building, Heavy (Heavy and Dredging) and Highway

Counties: Alameda, Calaveras, Contra Costa, Fresno, Kings, Madera, Mariposa, Merced, Monterey, San Benito, San Francisco, San Joaquin, San Mateo, Santa Clara, Santa Cruz, Stanislaus and Tuolumne Counties in California.

BUILDING CONSTRUCTION PROJECTS; DREDGING PROJECTS (does not include hopper dredge work); HEAVY CONSTRUCTION PROJECTS (does not include water well drilling); HIGHWAY CONSTRUCTION PROJECTS

Note: Under Executive Order (EO) 13658, an hourly minimum wage of $10.20 for calendar year 2017 applies to all contracts subject to the Davis-Bacon Act for which the contract is awarded (and any solicitation was issued) on or after January 1, 2015. If this contract is covered by the EO, the contractor must pay all workers in any classification listed on this wage determination at least $10.20 (or the applicable wage rate listed on this wage determination, if it is higher) for all hours spent performing on the contract in calendar year 2017. The EO minimum wage rate will be adjusted annually. Additional information on contractor requirements and worker protections under the EO is available at www.dol.gov/whd/govcontracts.

Modification Number	Publication Date
0	01/06/2017
1	01/20/2017
2	01/27/2017
3	02/17/2017
4	02/24/2017
5	03/03/2017
6	03/10/2017

ASBE0016-004 01/01/2015

AREA 1: CALAVERAS, FRESNO, KINGS, MADERA, MARIPOSA, MERCED, MONTEREY, SAN BENITO, SAN JOAQUIN, SANTA CRUZ, STANISLAUS & TOULMNE COUNTIES

AREA 2: ALAMEDA, CONTRA COSTA, SAN FRANSICO, SAN MATEO & SANTA CLARA COUNTIES

	Rates	Fringes
Asbestos Removal worker/hazardous material handler (Includes preparation, wetting,		

CONFORMED

stripping, removal,
scrapping, vacuuming, bagging
and disposing of all
insulation materials from
mechanical systems, whether
they contain asbestos or not)
Area 1.....$ 28.30 7.75
Area 2.....$ 32.38 7.75

ASBE0016-008 08/01/2016

AREA 1: ALAMEDA, CONTRA COSTA, MONTEREY, SAN BENITO, SAN FRANSICO, SAN MATEO, SANTA CLARA, & SANTA CRUZ

AREA 2: CALAVERAS, COLUSA, FRESNO, KINGS, MADERA, MARIPOSA, MERCED, SAN JOAQUIN, STANISLAU, & TUOLUMNE

	Rates	Fringes
Asbestos Workers/Insulator (Includes the application of all insulating materials, Protective Coverings, Coatings, and Finishes to all types of mechanical systems)		
Area 1	$ 62.36	23.10
Area 2	$ 46.96	23.10

BOIL0549-001 01/01/2013

AREA 1: ALAMEDA, CONTRA COSTA, SAN FRANCISCO, SAN MATEO & SANTA CLARA COUNTIES

AREA 2: REMAINING COUNTIES

	Rates	Fringes
BOILERMAKER		
Area 1	$ 42.06	33.43
Area 2	$ 38.37	31.32

BRCA0003-001 08/01/2016

	Rates	Fringes
MARBLE FINISHER	$ 31.17	14.94

BRCA0003-003 08/01/2016

	Rates	Fringes
MARBLE MASON	$ 41.77	26.36

BRCA0003-005 05/01/2016

	Rates	Fringes
BRICKLAYER		

CONFORMED

(1) Fresno, Kings, Madera, Mariposa, Merced	$ 37.04	21.13
(7) San Francisco, San Mateo	$ 40.89	25.78
(8) Alameda, Contra Costa, San Benito, Santa Clara	$ 42.70	21.67
(9) Calaveras, San Joaquin, Stanislaus, Toulumne	$ 38.21	20.71
(16) Monterey, Santa Cruz	$ 39.51	23.49

BRCA0003-008 07/01/2016

	Rates	Fringes
TERRAZZO FINISHER	$ 34.43	16.58
TERRAZZO WORKER/SETTER	$ 42.41	26.31

BRCA0003-011 10/01/2016

AREA 1: Alameda, Contra Costa, Monterey, San Benito, San Francisco, San Mateo, Santa Clara, Santa Cruz

AREA 2: Calaveras, San Joaquin, Stanislaus, Tuolumne

AREA 3: Fresno, Kings, Madera, Mariposa, Merced

	Rates	Fringes
TILE FINISHER		
Area 1	$ 25.46	14.54
Area 2	$ 23.31	12.90
Area 3	$ 23.88	13.68
Tile Layer		
Area 1	$ 43.90	16.29
Area 2	$ 37.71	14.19
Area 3	$ 34.40	15.59

CARP0022-001 07/01/2016

San Francisco County

	Rates	Fringes
Carpenters		
Bridge Builder/Highway Carpenter	$ 44.40	28.20
Hardwood Floorlayer, Shingler, Power Saw Operator, Steel Scaffold & Steel Shoring Erector, Saw Filer	$ 44.55	28.20
Journeyman Carpenter	$ 44.40	28.20
Millwright	$ 44.50	29.79

CARP0034-001 07/01/2016

	Rates	Fringes

CONFORMED

Diver
Assistant Tender, ROV
Tender/Technician.....$ 43.65 31.40
Diver standby.....$ 48.61 31.40
Diver Tender.....$ 47.82 31.40
Diver wet.....$ 93.17 31.40
Manifold Operator (mixed gas).....$ 52.82 31.40
Manifold Operator (Standby).$ 47.82 31.40

DEPTH PAY (Surface Diving):
050 to 100 ft $2.00 per foot
101 to 150 ft $3.00 per foot
151 to 220 ft $4.00 per foot

SATURATION DIVING:
The standby rate shall apply until saturation starts. The saturation diving rate applies when divers are under pressure continuously until work task and decompression are complete. The diver rate shall be paid for all saturation hours.

DIVING IN ENCLOSURES:
Where it is necessary for Divers to enter pipes or tunnels, or other enclosures where there is no vertical ascent, the following premium shall be paid: Distance traveled from entrance 26 feet to 300 feet: $1.00 per foot. When it is necessary for a diver to enter any pipe, tunnel or other enclosure less than 48" in height, the premium will be $1.00 per foot.

WORK IN COMBINATION OF CLASSIFICATIONS:
Employees working in any combination of classifications within the diving crew (except dive supervisor) in a shift are paid in the classification with the highest rate for that shift.

CARP0034-003 07/01/2014

	Rates	Fringes
Piledriver.....$	40.60	30.73

CARP0035-007 07/01/2016

AREA 1: Alameda, Contra Costa, San Francisco, San Mateo, Santa Clara counties

AREA 2: Monterey, San Benito, Santa Cruz Counties

AREA 3: Calaveras, Fresno, Kings, Madera, Mariposa, Merced, San Joaquin, Stanislaus, Tuolumne Counties

	Rates	Fringes
Modular Furniture Installer		
Area 1		

CONFORMED

Installer I	$ 24.91	19.62
Installer II	$ 21.48	19.63
Lead Installer	$ 28.36	20.13
Master Installer	$ 32.58	19.63
Area 2		
Installer I	$ 22.26	19.63
Installer II	$ 19.31	19.63
Lead Installer	$ 25.23	20.13
Master Installer	$ 28.86	20.13
Area 3		
Installer I	$ 21.31	19.63
Installer II	$ 18.54	19.63
Lead Installer	$ 24.11	20.13
Master Installer	$ 31.13	20.13

CARP0035-008 08/01/2016

AREA 1: Alameda, Contra Costa, San Francisco, San Mateo, Santa Clara counties

AREA 2: Monterey, San Benito, Santa Cruz Counties

AREA 3: San Joaquin

AREA 4: Calaveras, Fresno, Kings, Madera, Mariposa, Merced, Stanislaus, Tuolumne Counties

	Rates	Fringes
Drywall Installers/Lathers:		
Area 1	$ 44.40	28.64
Area 2	$ 38.52	28.64
Area 3	$ 39.02	28.64
Area 4	$ 37.67	28.64
Drywall Stocker/Scrapper		
Area 1	$ 22.20	16.57
Area 2	$ 19.26	16.57
Area 3	$ 19.51	16.57
Area 4	$ 18.84	16.57

CARP0152-001 07/01/2016

Contra Costa County

	Rates	Fringes
Carpenters		
Bridge Builder/Highway Carpenter	$ 44.40	28.20
Hardwood Floorlayer, Shingler, Power Saw Operator, Steel Scaffold & Steel Shoring Erector, Saw Filer	$ 44.55	28.20
Journeyman Carpenter	$ 44.40	28.20
Millwright	$ 44.50	29.79

CARP0152-002 07/01/2016

CONFORMED

San Joaquin County

	Rates	Fringes
Carpenters		
Bridge Builder/Highway Carpenter	$ 44.40	28.20
Hardwood Floorlayer, Shingler, Power Saw Operator, Steel Scaffold & Steel Shoring Erector, Saw Filer	$ 38.67	28.20
Journeyman Carpenter	$ 38.52	28.20
Millwright	$ 41.02	29.79

CARP0152-004 07/01/2016

Calaveras, Mariposa, Merced, Stanislaus and Tuolumne Counties

	Rates	Fringes
Carpenters		
Bridge Builder/Highway Carpenter	$ 44.40	28.20
Hardwood Floorlayer, Shingler, Power Saw Operator, Steel Scaffold & Steel Shoring Erector, Saw Filer	$ 37.32	28.20
Journeyman Carpenter	$ 37.17	28.20
Millwright	$ 39.67	29.79

CARP0217-001 07/01/2016

San Mateo County

	Rates	Fringes
Carpenters		
Bridge Builder/Highway Carpenter	$ 44.40	28.20
Hardwood Floorlayer, Shingler, Power Saw Operator, Steel Scaffold & Steel Shoring Erector, Saw Filer	$ 44.55	28.20
Journeyman Carpenter	$ 44.40	28.20
Millwright	$ 44.50	29.79

CARP0405-001 07/01/2016

Santa Clara County

	Rates	Fringes
Carpenters		
Bridge Builder/Highway Carpenter	$ 44.40	28.20
Hardwood Floorlayer, Shingler, Power Saw		

CONFORMED

Operator, Steel Scaffold &
Steel Shoring Erector, Saw
Filer.....$ 44.55 28.20
Journeyman Carpenter.....$ 44.40 28.20
Millwright.....$ 44.50 29.79

CARP0405-002 07/01/2016

San Benito County

	Rates	Fringes
Carpenters		
Bridge Builder/Highway Carpenter	$ 44.40	28.20
Hardwood Floorlayer, Shingler, Power Saw Operator, Steel Scaffold & Steel Shoring Erector, Saw Filer	$ 38.58	28.20
Journeyman Carpenter	$ 38.52	28.20
Millwright	$ 41.02	29.79

CARP0505-001 07/01/2016

Santa Cruz County

	Rates	Fringes
Carpenters		
Bridge Builder/Highway Carpenter	$ 44.40	28.20
Hardwood Floorlayer, Shingler, Power Saw Operator, Steel Scaffold & Steel Shoring Erector, Saw Filer	$ 38.67	28.20
Journeyman Carpenter	$ 38.52	28.20
Millwright	$ 41.02	29.79

CARP0605-001 07/01/2016

Monterey County

	Rates	Fringes
Carpenters		
Bridge Builder/Highway Carpenter	$ 44.40	28.20
Hardwood Floorlayer, Shingler, Power Saw Operator, Steel Scaffold & Steel Shoring Erector, Saw Filer	$ 38.67	28.20
Journeyman Carpenter	$ 38.52	28.20
Millwright	$ 41.02	29.79

CARP0701-001 07/01/2016

Fresno and Madera Counties

CONFORMED

	Rates	Fringes
Carpenters		
Bridge Builder/Highway Carpenter	$ 44.40	28.20
Hardwood Floorlayer, Shingler, Power Saw Operator, Steel Scaffold & Steel Shoring Erector, Saw Filer	$ 37.32	28.20
Journeyman Carpenter	$ 37.17	28.20
Millwright	$ 39.67	29.79

CARP0713-001 07/01/2016

Alameda County

	Rates	Fringes
Carpenters		
Bridge Builder/Highway Carpenter	$ 44.40	28.20
Hardwood Floorlayer, Shingler, Power Saw Operator, Steel Scaffold & Steel Shoring Erector, Saw Filer	$ 44.55	28.20
Journeyman Carpenter	$ 44.40	28.20
Millwright	$ 44.50	29.79

CARP1109-001 07/01/2016

Kings County

	Rates	Fringes
Carpenters		
Bridge Builder/Highway Carpenter	$ 44.40	28.20
Hardwood Floorlayer, Shingler, Power Saw Operator, Steel Scaffold & Steel Shoring Erector, Saw Filer	$ 37.32	28.20
Journeyman Carpenter	$ 37.17	28.20
Millwright	$ 39.67	29.79

ELEC0006-004 12/01/2016

SAN FRANCISCO COUNTY

	Rates	Fringes
Sound & Communications		
Installer	$ 35.57	3%+18.05
Technician	$ 40.50	3%+18.05

SCOPE OF WORK: Including any data system whose only function is to transmit or receive information; excluding all other

CONFORMED

data systems or multiple systems which include control function or power supply; inclusion or exclusion of terminations and testings of conductors determined by their function; excluding fire alarm work when installed in raceways (including wire and cable pulling) and when performed on new or major remodel building projects or jobs for which the conductors for the fire alarm system are installed in conduit; excluding installation of raceway systems, line voltage work, industrial work, life-safety systems (all buildings having floors located more than 75' above the lowest floor level having building access); excluding energy management systems.

FOOTNOTE: Fire alarm work when installed in raceways (including wire and cable pulling), on projects which involve new or major remodel building construction, for which the conductors for the fire alarm system are installed in the conduit, shall be performed by the inside electrician.

ELEC0006-007 06/01/2016

SAN FRANCISCO COUNTY

	Rates	Fringes
ELECTRICIAN	$ 64.00	30.38

ELEC0100-002 03/01/2017

FRESNO, KINGS, AND MADERA COUNTIES

	Rates	Fringes
ELECTRICIAN	$ 36.50	21.65

ELEC0100-005 12/01/2016

FRESNO, KINGS, MADERA

	Rates	Fringes
Communications System		
Installer	$ 30.64	3%+17.86
Technician	$ 34.89	3%+17.86

SCOPE OF WORK

Includes the installation testing, service and maintenance, of the following systems which utilize the transmission and/or transference of voice, sound, vision and digital for commercial, education, security and entertainment purposes for the following: TV monitoring and surveillance, background-foreground music, intercom and telephone interconnect, inventory control systems, microwave transmission, multi-media, multiplex, nurse call system, radio page, school intercom and sound, burglar alarms, and low voltage master clock systems.

A. SOUND AND VOICE TRANSMISSION/TRANSFERENCE SYSTEMS

CONFORMED

Background foreground music, Intercom and telephone interconnect systems, Telephone systems Nurse call systems, Radio page systems, School intercom and sound systems, Burglar alarm systems, Low voltage, master clock systems, Multi-media/multiplex systems, Sound and musical entertainment systems, RF systems, Antennas and Wave Guide,

B. FIRE ALARM SYSTEMS Installation, wire pulling and testing

C. TELEVISION AND VIDEO SYSTEMS Television monitoring and surveillance systems Video security systems, Video entertainment systems, Video educational systems, Microwave transmission systems, CATV and CCTV

D. SECURITY SYSTEMS Perimeter security systems Vibration sensor systems Card access systems Access control systems, Sonar/infrared monitoring equipment

E. COMMUNICATIONS SYSTEMS THAT TRANSMIT OR RECEIVE INFORMATION AND/OR CONTROL SYSTEMS THAT ARE INTRINSIC TO THE ABOVE LISTED SYSTEMS SCADA (Supervisory Control and Data Acquisition) PCM (Pulse Code Modulation) Inventory Control Systems, Digital Data Systems Broadband and Baseband and Carriers Point of Sale Systems, VSAT Data Systems Data Communication Systems RF and Remote Control Systems, Fiber Optic Data Systems

WORK EXCLUDED Raceway systems are not covered (excluding Ladder-Rack for the purpose of the above listed systems). Chases and/or nipples (not to exceed 10 feet) may be installed on open wiring systems. Energy management systems. SCADA (Supervisory Control and Data Acquisition) when not intrinsic to the above listed systems (in the scope). Fire alarm systems when installed in raceways (including wire and cable pulling) shall be performed at the electrician wage rate, when either of the following two (2) conditions apply:
1. The project involves new or major remodel building trades construction.
2. The conductors for the fire alarm system are installed in conduit.

ELEC0234-001 12/25/2016

MONTEREY, SAN BENITO AND SANTA CRUZ COUNTIES

	Rates	Fringes
ELECTRICIAN		
Zone A	$ 44.65	24.44
Zone B	$ 49.12	24.57

Zone A: All of Santa Cruz, Monterey, and San Benito Counties within 25 air miles of Highway 1 and Dolan Road in Moss Landing, and an area extending 5 miles east and west of Highway 101 South to the San Luis Obispo County Line

Zone B: Any area outside of Zone A

CONFORMED

ELEC0234-003 12/01/2016

MONTEREY, SAN BENITO, AND SANTA CRUZ COUNTIES

	Rates	Fringes
Sound & Communications		
Installer	$ 35.07	18.60
Technician	$ 37.94	16.30

SCOPE OF WORK: Including any data system whose only function is to transmit or receive information; excluding all other data systems or multiple systems which include control function or power supply; inclusion or exclusion of terminations and testings of conductors determined by their function; excluding fire alarm work when installed in raceways (including wire and cable pulling) and when performed on new or major remodel building projects or jobs for which the conductors for the fire alarm system are installed in conduit; excluding installation of raceway systems, line voltage work, industrial work, life-safety systems (all buildings having floors located more than 75' above the lowest floor level having building access); excluding energy management systems.

FOOTNOTE: Fire alarm work when installed in raceways (including wire and cable pulling), on projects which involve new or major remodel building construction, for which the conductors for the fire alarm system are installed in the conduit, shall be performed by the inside electrician.

---

* ELEC0302-001 02/27/2017

CONTRA COSTA COUNTY

	Rates	Fringes
CABLE SPLICER	$ 54.92	26.75
ELECTRICIAN	$ 48.51	26.56

ELEC0302-003 12/01/2016

CONTRA COSTA COUNTY

	Rates	Fringes
Sound & Communications		
Installer	$ 35.07	18.05
Technician	$ 39.93	18.20

SCOPE OF WORK: Including any data system whose only function is to transmit or receive information; excluding all other data systems or multiple systems which include control function or power supply; inclusion or exclusion of terminations and testings of conductors determined by their function; excluding fire alarm work when installed in raceways (including wire and cable pulling) and when

CONFORMED

performed on new or major remodel building projects or jobs for which the conductors for the fire alarm system are installed in conduit; excluding installation of raceway systems, line voltage work, industrial work, life-safety systems (all buildings having floors located more than 75' above the lowest floor level having building access); excluding energy management systems.

FOOTNOTE: Fire alarm work when installed in raceways (including wire and cable pulling), on projects which involve new or major remodel building construction, for which the conductors for the fire alarm system are installed in the conduit, shall be performed by the inside electrician.

ELEC0332-001 05/30/2016

SANTA CLARA COUNTY

	Rates	Fringes
CABLE SPLICER	$ 67.87	33.28
ELECTRICIAN	$ 59.02	32.75

FOOTNOTES: Work under compressed air or where gas masks are required, orwork on ladders, scaffolds, stacks, "Bosun's chairs," or other structures and where the workers are not protected by permanent guard rails at a distance of 40 to 60 ft. from the ground or supporting structures: to be paid one and one-half times the straight-time rate of pay. Work on structures of 60 ft. or over (as described above): to be paid twice the straight-time rate of pay.

ELEC0332-003 11/30/2015

SANTA CLARA COUNTY

	Rates	Fringes
Sound & Communications		
Installer	$ 34.32	17.33
Technician	$ 39.08	17.47

SCOPE OF WORK: Including any data system whose only function is to transmit or receive information; excluding all other data systems or multiple systems which include control function or power supply; inclusion or exclusion of terminations and testings of conductors determined by their function; excluding fire alarm work when installed in raceways (including wire and cable pulling) and when performed on new or major remodel building projects or jobs for which the conductors for the fire alarm system are installed in conduit; excluding installation of raceway systems, line voltage work, industrial work, life-safety systems (all buildings having floors located more than 75' above the lowest floor level having building access); excluding energy management systems.

CONFORMED

FOOTNOTE: Fire alarm work when installed in raceways (including wire and cable pulling), on projects which involve new or major remodel building construction, for which the conductors for the fire alarm system are installed in the conduit, shall be performed by the inside electrician.

ELEC0595-001 06/01/2016

ALAMEDA COUNTY

	Rates	Fringes
CABLE SPLICER	$ 58.95	34.14
ELECTRICIAN	$ 52.40	33.95

ELEC0595-002 12/01/2016

CALAVERAS AND SAN JOAQUIN COUNTIES

	Rates	Fringes
CABLE SPLICER	$ 40.54	7.5%+23.49
ELECTRICIAN		
(1) Tunnel work	$ 37.01	7.5%+23.49
(2) All other work	$ 35.25	7.5%+23.49

ELEC0595-006 12/01/2016

ALAMEDA COUNTY

	Rates	Fringes
Sound & Communications		
Installer	$ 35.07	3%+17.55
Technician	$ 39.93	3%+17.55

SCOPE OF WORK: Including any data system whose only function is to transmit or receive information; excluding all other data systems or multiple systems which include control function or power supply; inclusion or exclusion of terminations and testings of conductors determined by their function; excluding fire alarm work when installed in raceways (including wire and cable pulling) and when performed on new or major remodel building projects or jobs for which the conductors for the fire alarm system are installed in conduit; excluding installation of raceway systems, line voltage work, industrial work, life-safety systems (all buildings having floors located more than 75' above the lowest floor level having building access); excluding energy management systems.

FOOTNOTE: Fire alarm work when installed in raceways (including wire and cable pulling), on projects which involve new or major remodel building construction, for which the conductors for the fire alarm system are installed in the conduit, shall be performed by the inside electrician.

CONFORMED

ELEC0595-008 12/01/2016

CALAVERAS AND SAN JOAQUIN COUNTIES

	Rates	Fringes
Communications System		
Installer	$ 30.64	3%+17.55
Technician	$ 34.89	3%+17.55

SCOPE OF WORK: Including any data system whose only function is to transmit or receive information; excluding all other data systems or multiple systems which include control function or power supply; inclusion or exclusion of terminations and testings of conductors determined by their function; excluding fire alarm work when installed in raceways (including wire and cable pulling) and when performed on new or major remodel building projects or jobs for which the conductors for the fire alarm system are installed in conduit; excluding installation of raceway systems, line voltage work, industrial work, life-safety systems (all buildings having floors located more than 75' above the lowest floor level having building access); excluding energy management systems.

FOOTNOTE: Fire alarm work when installed in raceways (including wire and cable pulling), on projects which involve new or major remodel building construction, for which the conductors for the fire alarm system are installed in the conduit, shall be performed by the inside electrician.

ELEC0617-001 06/01/2016

SAN MATEO COUNTY

	Rates	Fringes
ELECTRICIAN	$ 55.30	32.19

ELEC0617-003 12/01/2016

SAN MATEO COUNTY

	Rates	Fringes
Sound & Communications		
Installer	$ 35.07	18.86
Technician	$ 39.93	18.86

SCOPE OF WORK: Including any data system whose only function is to transmit or receive information; excluding all other data systems or multiple systems which include control function or power supply; inclusion or exclusion of terminations and testings of conductors determined by their function; excluding fire alarm work when installed in raceways (including wire and cable pulling) and when performed on new or major remodel building projects or

CONFORMED

jobs for which the conductors for the fire alarm system are installed in conduit; excluding installation of raceway systems, line voltage work, industrial work, life-safety systems (all buildings having floors located more than 75' above the lowest floor level having building access); excluding energy management systems.

FOOTNOTE: Fire alarm work when installed in raceways (including wire and cable pulling), on projects which involve new or major remodel building construction, for which the conductors for the fire alarm system are installed in the conduit, shall be performed by the inside electrician.

ELEC0684-001 12/01/2016

MARIPOSA, MERCED, STANISLAUS AND TUOLUMNE COUNTIES

	Rates	Fringes
ELECTRICIAN	$ 36.40	3%+20.73

CABLE SPLICER = 110% of Journeyman Electrician

ELEC0684-004 12/01/2016

MARIPOSA, MERCED, STANISLAUS AND TUOLUMNE COUNTIES

	Rates	Fringes
Communications System		
Installer	$ 30.64	3%+17.86
Technician	$ 34.89	3%+17.86

SCOPE OF WORK: Including any data system whose only function is to transmit or receive information; excluding all other data systems or multiple systems which include control function or power supply; inclusion or exclusion of terminations and testings of conductors determined by their function; excluding fire alarm work when installed in raceways (including wire and cable pulling) and when performed on new or major remodel building projects or jobs for which the conductors for the fire alarm system are installed in conduit; excluding installation of raceway systems, line voltage work, industrial work, life-safety systems (all buildings having floors located more than 75' above the lowest floor level having building access); excluding energy management systems.

FOOTNOTE: Fire alarm work when installed in raceways (including wire and cable pulling), on projects which involve new or major remodel building construction, for which the conductors for the fire alarm system are installed in the conduit, shall be performed by the inside electrician.

ELEC1245-001 06/01/2015

CONFORMED

	Rates	Fringes
LINE CONSTRUCTION		
(1) Lineman; Cable splicer	$ 52.85	15.53
(2) Equipment specialist (operates crawler tractors, commercial motor vehicles, backhoes, trenchers, cranes (50 tons and below), overhead & underground distribution line equipment)	$ 42.21	14.32
(3) Groundman	$ 32.28	14.03
(4) Powderman	$ 47.19	14.60

HOLIDAYS: New Year's Day, M.L. King Day, Memorial Day, Independence Day, Labor Day, Veterans Day, Thanksgiving Day and day after Thanksgiving, Christmas Day

---

ELEV0008-001 01/01/2017

	Rates	Fringes
ELEVATOR MECHANIC	$ 63.44	31.585

FOOTNOTE:
PAID VACATION: Employer contributes 8% of regular hourly rate as vacation pay credit for employees with more than 5 years of service, and 6% for 6 months to 5 years of service.
PAID HOLIDAYS: New Years Day, Memorial Day, Independence Day, Labor Day, Veterans Day, Thanksgiving Day, Friday after Thanksgiving, and Christmas Day.

ENGI0003-008 07/01/2013

	Rates	Fringes
Dredging: (DREDGING: CLAMSHELL & DIPPER DREDGING; HYDRAULIC SUCTION DREDGING:)		
AREA 1:		
(1) Leverman	$ 40.53	27.81
(2) Dredge Dozer; Heavy duty repairman	$ 35.57	27.81
(3) Booster Pump Operator; Deck Engineer; Deck mate; Dredge Tender; Winch Operator	$ 34.45	27.81
(4) Bargeman; Deckhand; Fireman; Leveehand; Oiler	$ 31.15	27.81
AREA 2:		
(1) Leverman	$ 42.53	27.81
(2) Dredge Dozer; Heavy duty repairman	$ 37.57	27.81
(3) Booster Pump Operator; Deck Engineer; Deck mate;		

CONFORMED

Dredge Tender; Winch Operator.....$ 36.45 27.81
(4) Bargeman; Deckhand; Fireman; Leveehand; Oiler..$ 33.15 27.81

AREA DESCRIPTIONS

AREA 1: ALAMEDA,BUTTE, CONTRA COSTA, KINGS, MARIN, MERCED, NAPA, SACRAMENTO, SAN BENITO, SAN FRANCISCO, SAN JOAQUIN, SAN MATEO, SANTA CLARA, SANTA CRUZ, SOLANO, STANISLAUS, SUTTER, YOLO, AND YUBA COUNTIES

AREA 2: MODOC COUNTY

THE REMAINGING COUNTIES ARE SPLIT BETWEEN AREA 1 AND AREA 2 AS NOTED BELOW:

ALPINE COUNTY:
Area 1: Northernmost part
Area 2: Remainder

CALAVERAS COUNTY:
Area 1: Remainder
Area 2: Eastern part

COLUSA COUNTY:
Area 1: Eastern part
Area 2: Remainder

ELDORADO COUNTY:
Area 1: North Central part
Area 2: Remainder

FRESNO COUNTY:
Area 1: Remainder
Area 2: Eastern part

GLENN COUNTY:
Area 1: Eastern part
Area 2: Remainder

LASSEN COUNTY:
Area 1: Western part along the Southern portion of border with Shasta County
Area 2: Remainder

MADERA COUNTY:
Area 1: Except Eastern part
Area 2: Eastern part

MARIPOSA COUNTY
Area 1: Except Eastern part
Area 2: Eastern part

MONTERREY COUNTY
Area 1: Except Southwestern part
Area 2: Southwestern part

NEVADA COUNTY:
Area 1: All but the Northern portion along the border of

CONFORMED

Sierra County
Area 2: Remainder

PLACER COUNTY:
Area 1: Al but the Central portion
Area 2: Remainder

PLUMAS COUNTY:
Area 1: Western portion
Area 2: Remainder

SHASTA COUNTY:
Area 1: All but the Northeastern corner
Area 2: Remainder

SIERRA COUNTY:
Area 1: Western part
Area 2: Remainder

SISKIYOU COUNTY:
Area 1: Central part
Area 2: Remainder

SONOMA COUNTY:
Area 1: All but the Northwestern corner
Area 2: Remainder

TEHAMA COUNTY:
Area 1: All but the Western border with Mendocino & Trinity Counties
Area 2: Remainder

TRINITY COUNTY:
Area 1: East Central part and the Northeastern border with Shasta County
Area 2: Remainder

TUOLUMNE COUNTY:
Area 1: Except Eastern part
Area 2: Eastern part

ENGI0003-018 06/30/2014

"AREA 1" WAGE RATES ARE LISTED BELOW

"AREA 2" RECEIVES AN ADDITIONAL $2.00 PER HOUR ABOVE AREA 1 RATES.

SEE AREA DEFINITIONS BELOW

	Rates	Fringes
OPERATOR: Power Equipment (AREA 1:)		
GROUP 1	$ 39.85	27.44
GROUP 2	$ 38.32	27.44
GROUP 3	$ 36.84	27.44
GROUP 4	$ 35.46	27.44

CONFORMED

GROUP 5.....$ 34.19 27.44
GROUP 6.....$ 32.87 27.44
GROUP 7.....$ 31.73 27.44
GROUP 8.....$ 30.59 27.44
GROUP 8-A.....$ 28.38 27.44

OPERATOR: Power Equipment
(Cranes and Attachments -
AREA 1:)

GROUP 1
Cranes.....$ 40.73 27.44
Oiler.....$ 33.76 27.44
Truck crane oiler.....$ 37.33 27.44

GROUP 2
Cranes.....$ 38.97 27.44
Oiler.....$ 33.50 27.44
Truck crane oiler.....$ 37.04 27.44

GROUP 3
Cranes.....$ 37.23 27.44
Hydraulic.....$ 32.87 27.44
Oiler.....$ 33.26 27.44
Truck Crane Oiler.....$ 36.77 27.44

GROUP 4
Cranes.....$ 34.19 27.44

OPERATOR: Power Equipment
(Piledriving - AREA 1:)

GROUP 1
Lifting devices.....$ 41.07 27.44
Oiler.....$ 31.81 27.44
Truck crane oiler.....$ 34.09 27.44

GROUP 2
Lifting devices.....$ 39.25 27.44
Oiler.....$ 31.54 27.44
Truck Crane Oiler.....$ 33.84 27.44

GROUP 3
Lifting devices.....$ 37.57 27.44
Oiler.....$ 31.32 27.44
Truck Crane Oiler.....$ 33.55 27.44

GROUP 4
Lifting devices.....$ 35.80 27.44

GROUP 5
Lifting devices.....$ 34.50 27.44

GROUP 6
Lifting devices.....$ 33.16 27.44

OPERATOR: Power Equipment
(Steel Erection - AREA 1:)

GROUP 1
Cranes.....$ 41.70 27.44
Oiler.....$ 32.15 27.44
Truck Crane Oiler.....$ 34.38 27.44

GROUP 2
Cranes.....$ 39.93 27.44
Oiler.....$ 31.88 27.44
Truck Crane Oiler.....$ 34.16 27.44

GROUP 3
Cranes.....$ 38.45 27.44
Hydraulic.....$ 32.67 27.44
Oiler.....$ 31.66 27.44
Truck Crane Oiler.....$ 33.89 27.44

GROUP 4
Cranes.....$ 36.43 27.44

CONFORMED

GROUP 5		
Cranes	$ 35.13	27.44
OPERATOR: Power Equipment (Tunnel and Underground Work - AREA 1:)		
SHAFTS, STOPES, RAISES:		
GROUP 1	$ 35.95	27.44
GROUP 1-A	$ 38.32	27.44
GROUP 2	$ 34.59	27.44
GROUP 3	$ 33.36	27.44
GROUP 4	$ 32.22	27.44
GROUP 5	$ 31.08	27.44
UNDERGROUND:		
GROUP 1	$ 35.85	27.44
GROUP 1-A	$ 38.32	27.44
GROUP 2	$ 34.59	27.44
GROUP 3	$ 33.26	27.44
GROUP 4	$ 32.12	27.44
GROUP 5	$ 30.98	27.44

FOOTNOTE: Work suspended by ropes or cables, or work on a Yo-Yo Cat: $.60 per hour additional.

POWER EQUIPMENT OPERATOR CLASSIFICATIONS

GROUP 1: Operator of helicopter (when used in erection work); Hydraulic excavator, 7 cu. yds. and over; Power shovels, over 7 cu. yds.

GROUP 2: Highline cableway; Hydraulic excavator, 3-1/2 cu. yds. up to 7 cu. yds.; Licensed construction work boat operator, on site; Power blade operator (finish); Power shovels, over 1 cu. yd. up to and including 7 cu. yds. m.r.c.

GROUP 3: Asphalt milling machine; Cable backhoe; Combination backhoe and loader over 3/4 cu. yds.; Continuous flight tie back machine assistant to engineer or mechanic; Crane mounted continuous flight tie back machine, tonnage to apply; Crane mounted drill attachment, tonnage to apply; Dozer, slope brd; Gradall; Hydraulic excavator, up to 3 1/2 cu. yds.; Loader 4 cu. yds. and over; Long reach excavator; Multiple engine scraper (when used as push pull); Power shovels, up to and including 1 cu. yd.; Pre-stress wire wrapping machine; Side boom cat, 572 or larger; Track loader 4 cu. yds. and over; Wheel excavator (up to and including 750 cu. yds. per hour)

GROUP 4: Asphalt plant engineer/box person; Chicago boom; Combination backhoe and loader up to and including 3/4 cu. yd.; Concrete batch plant (wet or dry); Dozer and/or push cat; Pull- type elevating loader; Gradesetter, grade checker (GPS, mechanical or otherwise); Grooving and grinding machine; Heading shield operator; Heavy-duty drilling equipment, Hughes, LDH, Watson 3000 or similar; Heavy-duty repairperson and/or welder; Lime spreader; Loader under 4 cu. yds.; Lubrication and service engineer (mobile and grease rack); Mechanical finishers or spreader machine (asphalt, Barber-Greene and similar); Miller

CONFORMED

Formless M-9000 slope paver or similar; Portable crushing and screening plants; Power blade support; Roller operator, asphalt; Rubber-tired scraper, self-loading (paddle-wheels, etc.); Rubber- tired earthmoving equipment (scrapers); Slip form paver (concrete); Small tractor with drag; Soil stabilizer (P & H or equal); Spider plow and spider puller; Tubex pile rig; Unlicensed constuction work boat operator, on site; Timber skidder; Track loader up to 4 yds.; Tractor-drawn scraper; Tractor, compressor drill combination; Welder; Woods-Mixer (and other similar Pugmill equipment)

GROUP 5: Cast-in-place pipe laying machine; Combination slusher and motor operator; Concrete conveyor or concrete pump, truck or equipment mounted; Concrete conveyor, building site; Concrete pump or pumpcrete gun; Drilling equipment, Watson 2000, Texoma 700 or similar; Drilling and boring machinery, horizontal (not to apply to waterliners, wagon drills or jackhammers); Concrete mixer/all; Person and/or material hoist; Mechanical finishers (concrete) (Clary, Johnson, Bidwell Bridge Deck or similar types); Mechanical burm, curb and/or curb and gutter machine, concrete or asphalt); Mine or shaft hoist; Portable crusher; Power jumbo operator (setting slip-forms, etc., in tunnels); Screed (automatic or manual); Self-propelled compactor with dozer; Tractor with boom D6 or smaller; Trenching machine, maximum digging capacity over 5 ft. depth; Vermeer T-600B rock cutter or similar

GROUP 6: Armor-Coater (or similar); Ballast jack tamper; Boom- type backfilling machine; Assistant plant engineer; Bridge and/or gantry crane; Chemical grouting machine, truck-mounted; Chip spreading machine operator; Concrete saw (self-propelled unit on streets, highways, airports and canals); Deck engineer; Drilling equipment Texoma 600, Hughes 200 Series or similar up to and including 30 ft. m.r.c.; Drill doctor; Helicopter radio operator; Hydro-hammer or similar; Line master; Skidsteer loader, Bobcat larger than 743 series or similar (with attachments); Locomotive; Lull hi-lift or similar; Oiler, truck mounted equipment; Pavement breaker, truck-mounted, with compressor combination; Paving fabric installation and/or laying machine; Pipe bending machine (pipelines only); Pipe wrapping machine (tractor propelled and supported); Screed (except asphaltic concrete paving); Self- propelled pipeline wrapping machine; Tractor; Self-loading chipper; Concrete barrier moving machine

GROUP 7: Ballast regulator; Boom truck or dual-purpose A-frame truck, non-rotating - under 15 tons; Cary lift or similar; Combination slurry mixer and/or cleaner; Drilling equipment, 20 ft. and under m.r.c.; Firetender (hot plant); Grouting machine operator; Highline cableway signalperson; Stationary belt loader (Kolman or similar); Lift slab machine (Vagtborg and similar types); Maginnes internal full slab vibrator; Material hoist (1 drum); Mechanical trench shield; Pavement breaker with or without compressor combination); Pipe cleaning machine (tractor propelled and supported); Post driver; Roller (except asphalt); Chip Seal; Self-propelled automatically applied concrete curing

CONFORMED

mahcine (on streets, highways, airports and canals); Self-propelled compactor (without dozer); Signalperson; Slip-form pumps (lifting device for concrete forms); Tie spacer; Tower mobile; Trenching machine, maximum digging capacity up to and including 5 ft. depth; Truck- type loader

GROUP 8: Bit sharpener; Boiler tender; Box operator; Brakeperson; Combination mixer and compressor (shotcrete/gunite); Compressor operator; Deckhand; Fire tender; Forklift (under 20 ft.); Generator; Gunite/shotcrete equipment operator; Hydraulic monitor; Ken seal machine (or similar); Mixermobile; Oiler; Pump operator; Refrigeration plant; Reservoir-debris tug (self-propelled floating); Ross Carrier (construction site); Rotomist operator; Self-propelled tape machine; Shuttlecar; Self-propelled power sweeper operator (includes vacuum sweeper); Slusher operator; Surface heater; Switchperson; Tar pot firetender; Tugger hoist, single drum; Vacuum cooling plant; Welding machine (powered other than by electricity)

GROUP 8-A: Elevator operator; Skidsteer loader-Bobcat 743 series or smaller, and similar (without attachments); Mini excavator under 25 H.P. (backhoe-trencher); Tub grinder wood chipper

---

ALL CRANES AND ATTACHMENTS

GROUP 1: Clamshell and dragline over 7 cu. yds.; Crane, over 100 tons; Derrick, over 100 tons; Derrick barge pedestal-mounted, over 100 tons; Self-propelled boom-type lifting device, over 100 tons

GROUP 2: Clamshell and dragline over 1 cu. yd. up to and including 7 cu. yds.; Crane, over 45 tons up to and including 100 tons; Derrick barge, 100 tons and under; Self-propelled boom-type lifting device, over 45 tons; Tower crane

GROUP 3: Clamshell and dragline up to and including 1 cu. yd.; Cranes 45 tons and under; Self-propelled boom-type lifting device 45 tons and under;

GROUP 4: Boom Truck or dual purpose A-frame truck, non-rotating over 15 tons; Truck-mounted rotating telescopic boom type lifting device, Manitex or similar (boom truck) over 15 tons; Truck-mounted rotating telescopic boom type lifting device, Manitex or similar (boom truck) - under 15 tons;

PILEDRIVERS

GROUP 1: Derrick barge pedestal mounted over 100 tons; Clamshell over 7 cu. yds.; Self-propelled boom-type lifting device over 100 tons; Truck crane or crawler, land or barge mounted over 100 tons

CONFORMED

GROUP 2: Derrick barge pedestal mounted 45 tons to and including 100 tons; Clamshell up to and including 7 cu. yds.; Self-propelled boom-type lifting device over 45 tons; Truck crane or crawler, land or barge mounted, over 45 tons up to and including 100 tons; Fundex F-12 hydraulic pile rig

GROUP 3: Derrick barge pedestal mounted under 45 tons; Self-propelled boom-type lifting device 45 tons and under; Skid/scow piledriver, any tonnage; Truck crane or crawler, land or barge mounted 45 tons and under

GROUP 4: Assistant operator in lieu of assistant to engineer; Forklift, 10 tons and over; Heavy-duty repairperson/welder

GROUP 5: Deck engineer

GROUP 6: Deckhand; Fire tender

STEEL ERECTORS

GROUP 1: Crane over 100 tons; Derrick over 100 tons; Self-propelled boom-type lifting device over 100 tons

GROUP 2: Crane over 45 tons to 100 tons; Derrick under 100 tons; Self-propelled boom-type lifting device over 45 tons to 100 tons; Tower crane

GROUP 3: Crane, 45 tons and under; Self-propelled boom-type lifting device, 45 tons and under

GROUP 4: Chicago boom; Forklift, 10 tons and over; Heavy-duty repair person/welder

GROUP 5: Boom cat

TUNNEL AND UNDERGROUND WORK

GROUP 1-A: Tunnel bore machine operator, 20' diameter or more

GROUP 1: Heading shield operator; Heavy-duty repairperson; Mucking machine (rubber tired, rail or track type); Raised bore operator (tunnels); Tunnel mole bore operator

GROUP 2: Combination slusher and motor operator; Concrete pump or pumpcrete gun; Power jumbo operator

GROUP 3: Drill doctor; Mine or shaft hoist

GROUP 4: Combination slurry mixer cleaner; Grouting Machine operator; Motorman

GROUP 5: Bit Sharpener; Brakeman; Combination mixer and compressor (gunite); Compressor operator; Oiler; Pump

CONFORMED

operator; Slusher operator

AREA DESCRIPTIONS:

POWER EQUIPMENT OPERATORS, CRANES AND ATTACHMENTS,TUNNEL AND UNDERGROUND [These areas do not apply to Piledrivers and Steel Erectors]

AREA 1: ALAMEDA, BUTTE, CONTRA COSTA, KINGS, MARIN, MERCED, NAPA, SACRAMENTO, SAN BENITO, SAN FRANCISCO, SAN JOAQUIN, SAN MATEO, SANTA CLARA, SANTA CRUZ, SOLANO, STANISLAUS, SUTTER, YOLO, AND YUBA COUNTIES

AREA 2 - MODOC COUNTY

THE REMAINING COUNTIES ARE SPLIT BETWEEN AREA 1 AND AREA 2 AS NOTED BELOW:

ALPINE COUNTY:
Area 1: Northernmost part
Area 2: Remainder

CALAVERAS COUNTY:
Area 1: Except Eastern part
Area 2: Eastern part

COLUSA COUNTY:
Area 1: Eastern part
Area 2: Remainder

DEL NORTE COUNTY:
Area 1: Extreme Southwestern corner
Area 2: Remainder

ELDORADO COUNTY:
Area 1: North Central part
Area 2: Remainder

FRESNO COUNTY
Area 1: Except Eastern part
Area 2: Eastern part

GLENN COUNTY:
Area 1: Eastern part
Area 2: Remainder

HUMBOLDT COUNTY:
Area 1: Except Eastern and Southwestern parts
Area 2: Remainder

LAKE COUNTY:
Area 1: Southern part
Area 2: Remainder

LASSEN COUNTY:
Area 1: Western part along the Southern portion of border with Shasta County
Area 2: Remainder

CONFORMED

MADERA COUNTY
Area 1: Remainder
Area 2: Eastern part

MARIPOSA COUNTY
Area 1: Remainder
Area 2: Eastern part

MENDOCINO COUNTY:
Area 1: Central and Southeastern parts
Area 2: Remainder

MONTEREY COUNTY
Area 1: Remainder
Area 2: Southwestern part

NEVADA COUNTY:
Area 1: All but the Northern portion along the border of Sierra County
Area 2: Remainder

PLACER COUNTY:
Area 1: All but the Central portion
Area 2: Remainder

PLUMAS COUNTY:
Area 1: Western portion
Area 2: Remainder

SHASTA COUNTY:
Area 1: All but the Northeastern corner
Area 2: Remainder

SIERRA COUNTY:
Area 1: Western part
Area 2: Remainder

SISKIYOU COUNTY:
Area 1: Central part
Area 2: Remainder

SONOMA COUNTY:
Area 1: All but the Northwestern corner
Area 2: Reaminder

TEHAMA COUNTY:
Area 1: All but the Western border with mendocino & Trinity Counties
Area 2: Remainder

TRINITY COUNTY:
Area 1: East Central part and the Northeaster border with Shasta County
Area 2: Remainder

TULARE COUNTY;
Area 1: Remainder
Area 2: Eastern part

TUOLUMNE COUNTY:

CONFORMED

Area 1: Remainder
Area 2: Eastern Part

ENGI0003-019 07/01/2013

SEE AREA DESCRIPTIONS BELOW

	Rates	Fringes
OPERATOR: Power Equipment (LANDSCAPE WORK ONLY)		
GROUP 1		
AREA 1	$ 29.64	25.71
AREA 2	$ 31.64	25.71
GROUP 2		
AREA 1	$ 26.04	25.71
AREA 2	$ 28.04	25.71
GROUP 3		
AREA 1	$ 21.43	25.71
AREA 2	$ 23.43	25.71

GROUP DESCRIPTIONS:

GROUP 1: Landscape Finish Grade Operator: All finish grade work regardless of equipment used, and all equipment with a rating more than 65 HP.

GROUP 2: Landscape Operator up to 65 HP: All equipment with a manufacturer's rating of 65 HP or less except equipment covered by Group 1 or Group 3. The following equipment shall be included except when used for finish work as long as manufacturer's rating is 65 HP or less: A-Frame and Winch Truck, Backhoe, Forklift, Hydragraphic Seeder Machine, Roller, Rubber-Tired and Track Earthmoving Equipment, Skiploader, Straw Blowers, and Trencher 31 HP up to 65 HP.

GROUP 3: Landscae Utility Operator: Small Rubber-Tired Tractor, Trencher Under 31 HP.

AREA DESCRIPTIONS:

AREA 1: ALAMEDA, BUTTE, CONTRA COSTA, KINGS, MARIN, MERCED, NAPA, SACRAMENTO, SAN BENITO, SAN FRANCISCO, SAN JOAQUIN, SAN MATEO, SANTA CLARA, SANTA CRUZ, SOLANO, STANISLAUS, SUTTER, YOLO, AND YUBA COUNTIES

AREA 2 - MODOC COUNTY

THE REMAINING COUNTIES ARE SPLIT BETWEEN AREA 1 AND AREA 2 AS NOTED BELOW:

ALPINE COUNTY:
Area 1: Northernmost part
Area 2: Remainder

CALAVERAS COUNTY:
Area 1: Except Eastern part
Area 2: Eastern part

CONFORMED

COLUSA COUNTY:
Area 1: Eastern part
Area 2: Remainder

DEL NORTE COUNTY:
Area 1: Extreme Southwestern corner
Area 2: Remainder

ELDORADO COUNTY:
Area 1: North Central part
Area 2: Remainder

FRESNO COUNTY
Area 1: Except Eastern part
Area 2: Eastern part

GLENN COUNTY:
Area 1: Eastern part
Area 2: Remainder

HUMBOLDT COUNTY:
Area 1: Except Eastern and Southwestern parts
Area 2: Remainder

LAKE COUNTY:
Area 1: Southern part
Area 2: Remainder

LASSEN COUNTY:
  Area 1: Western part along the Southern portion of border
  with Shasta County
Area 2: Remainder

MADERA COUNTY
Area 1: Remainder
Area 2: Eastern part

MARIPOSA COUNTY
Area 1: Remainder
Area 2: Eastern part

MENDOCINO COUNTY:
Area 1: Central and Southeastern parts
Area 2: Remainder

MONTEREY COUNTY
Area 1: Remainder
Area 2: Southwestern part

NEVADA COUNTY:
  Area 1: All but the Northern portion along the border of
  Sierra County
Area 2: Remainder

PLACER COUNTY:
Area 1: All but the Central portion
Area 2: Remainder

PLUMAS COUNTY:

CONFORMED

Area 1: Western portion
Area 2: Remainder

SHASTA COUNTY:
Area 1: All but the Northeastern corner
Area 2: Remainder

SIERRA COUNTY:
Area 1: Western part
Area 2: Remainder

SISKIYOU COUNTY:
Area 1: Central part
Area 2: Remainder

SONOMA COUNTY:
Area 1: All but the Northwestern corner
Area 2: Reaminder

TEHAMA COUNTY:
  Area 1: All but the Western border with mendocino & Trinity
  Counties
Area 2: Remainder

TRINITY COUNTY:
  Area 1: East Central part and the Northeaster border with
  Shasta County
Area 2: Remainder

TULARE COUNTY;
Area 1: Remainder
Area 2: Eastern part

TUOLUMNE COUNTY:
Area 1: Remainder
Area 2: Eastern Part

IRON0377-002 07/01/2016

	Rates	Fringes
Ironworkers:		
Fence Erector	$ 28.33	20.64
Ornamental, Reinforcing and Structural	$ 34.75	29.20

PREMIUM PAY:

$6.00 additional per hour at the following locations:

China Lake Naval Test Station, Chocolate Mountains Naval
Reserve-Niland,
Edwards AFB, Fort Irwin Military Station, Fort Irwin Training
Center-Goldstone, San Clemente Island, San Nicholas Island,
Susanville Federal Prison, 29 Palms - Marine Corps, U.S. Marine
Base - Barstow, U.S. Naval Air Facility - Sealey, Vandenberg AFB

$4.00 additional per hour at the following locations:

CONFORMED

Army Defense Language Institute - Monterey, Fallon Air Base, Naval Post Graduate School - Monterey, Yermo Marine Corps Logistics Center

$2.00 additional per hour at the following locations:

Port Hueneme, Port Mugu, U.S. Coast Guard Station - Two Rock

LABO0067-002 06/27/2016

AREA "A" - ALAMEDA, CONTRA COSTA, MARIN, SAN FRANCISCO, SAN MATEO AND SANTA CLARA COUNTIES

AREA "B" - ALPINE, AMADOR, BUTTE, CALAVERAS, COLUSA, DEL NORTE, EL DORADO, FRESNO, GLENN, HUMBOLDT, KINGS, LAKE, LASSEN, MADERA, MARIPOSA, MENDOCINO, MERCED, MODOC, MONTEREY, NAPA, NEVADA, PLACER, PLUMAS, SACRAMENTO, SAN BENITO, SAN JOAQUIN, SANTA CRUZ, SHASTA, SIERRA, SISKIYOU, SOLANO, SONOMA, STANISLAUS, SUTTER, TEHAMA, TRINITY, TULARE, TUOLUMNE, YOLO AND YUBA COUNTIES

	Rates	Fringes
Asbestos Removal Laborer		
Areas A & B	$ 20.66	10.02
LABORER (Lead Removal)		
Area A	$ 30.00	21.34
Area B	$ 29.00	21.34

ASBESTOS REMOVAL-SCOPE OF WORK: Site mobilization; initial site clean-up; site preparation; removal of asbestos-containing materials from walls and ceilings; or from pipes, boilers and mechanical systems only if they are being scrapped; encapsulation, enclosure and disposal of asbestos-containing materials by hand or with equipment or machinery; scaffolding; fabrication of temporary wooden barriers; and assembly of decontamination stations.

LABO0067-006 06/30/2014

AREA "A" - ALAMEDA, CONTRA COSTA, MARIN, SAN FRANCISCO, SAN MATEO AND SANTA CLARA COUNTIES

AREA "B" - ALPINE, AMADOR, BUTTE, CALAVERAS, COLUSA, EL DORADO, FRESNO, GLENN, KINGS, LASSEN, MADERA, MARIPOSA, MERCED, MODOC, MONTEREY, NAPA, NEVADA, PLACER, PLUMAS, SACRAMENTO, SAN BENITO, SAN JOAQUIN, SANTA CRUZ, SHASTA, SIERRA, SISKIYOU, SOLANO, SONOMA, STANISLAUS, SUTTER, TEHAMA, TRINITY, TULARE, TUOLUMNE, YOLO AND YUBA COUNTIES

	Rates	Fringes
Laborers: (CONSTRUCTION CRAFT LABORERS - AREA A:)		
Construction Specialist		

CONFORMED

Group	$ 29.09	18.66
GROUP 1	$ 28.39	18.66
GROUP 1-a	$ 28.61	18.66
GROUP 1-c	$ 28.44	18.66
GROUP 1-e	$ 28.94	18.66
GROUP 1-f	$ 28.97	18.66
GROUP 1-g (Contra Costa County)	$ 28.59	18.66
GROUP 2	$ 28.24	18.66
GROUP 3	$ 28.14	18.66
GROUP 4	$ 21.83	18.66

See groups 1-b and 1-d under laborer classifications.

Laborers: (CONSTRUCTION CRAFT LABORERS - AREA B:)

Construction Specialist Group	$ 28.09	18.66
GROUP 1	$ 27.39	18.66
GROUP 1-a	$ 27.61	18.66
GROUP 1-c	$ 27.44	18.66
GROUP 1-e	$ 27.94	18.66
GROUP 1-f	$ 27.97	18.66
GROUP 2	$ 27.24	18.66
GROUP 3	$ 27.14	18.66
GROUP 4	$ 20.83	18.66

See groups 1-b and 1-d under laborer classifications.

Laborers: (GUNITE - AREA A:)

GROUP 1	$ 29.35	18.66
GROUP 2	$ 28.85	18.66
GROUP 3	$ 28.26	18.66
GROUP 4	$ 28.14	18.66

Laborers: (GUNITE - AREA B:)

GROUP 1	$ 28.35	18.66
GROUP 2	$ 27.85	18.66
GROUP 3	$ 27.26	18.66
GROUP 4	$ 27.14	18.66

Laborers: (WRECKING - AREA A:)

GROUP 1	$ 28.39	18.66
GROUP 2	$ 28.24	18.66

Laborers: (WRECKING - AREA B:)

GROUP 1	$ 27.39	18.66
GROUP 2	$ 27.24	18.66

Landscape Laborer (GARDENERS, HORTICULTURAL & LANDSCAPE LABORERS - AREA A:)

(1) New Construction	$ 28.14	18.66
(2) Establishment Warranty Period	$ 21.83	18.66

Landscape Laborer (GARDENERS, HORTICULURAL & LANDSCAPE LABORERS - AREA B:)

(1) New Construction	$ 27.14	18.66
(2) Establishment Warranty Period	$ 20.83	18.66

FOOTNOTES:

Laborers working off or with or from bos'n chairs, swinging scaffolds, belts shall receive $0.25 per hour above the applicable wage rate. This shall not apply to workers entitled to receive the wage rate set forth in Group 1-a below.

CONFORMED

LABORER CLASSIFICATIONS

CONSTRUCTION SPECIALIST GROUP: Asphalt ironer and raker; Chainsaw; Laser beam in connection with laborers' work; Cast-in- place manhole form setter; Pressure pipelayer; Davis trencher - 300 or similar type (and all small trenchers); Blaster; Diamond driller; Multiple unit drill; Hydraulic drill

GROUP 1: Asphalt spreader boxes (all types); Barko, Wacker and similar type tampers; Buggymobile; Caulker, bander, pipewrapper, conduit layer, plastic pipelayer; Certified hazardous waste worker including Leade Abatement; Compactors of all types; Concrete and magnesite mixer, 1/2 yd. and under; Concrete pan work; Concrete sander; Concrete saw; Cribber and/or shoring; Cut granite curb setter; Dri-pak-it machine; Faller, logloader and bucker; Form raiser, slip forms; Green cutter; Headerboard, Hubsetter, aligner, by any method; High pressure blow pipe (1-1/2" or over, 100 lbs. pressure/over); Hydro seeder and similar type; Jackhammer operator; Jacking of pipe over 12 inches; Jackson and similar type compactor; Kettle tender, pot and worker applying asphalt, lay-kold, creosote, lime, caustic and similar type materials (applying means applying, dipping or handling of such materials); Lagging, sheeting, whaling, bracing, trenchjacking, lagging hammer; Magnesite, epoxyresin, fiberglass, mastic worker (wet or dry); No joint pipe and stripping of same, including repair of voids; Pavement breaker and spader, including tool grinder; Perma curb; Pipelayer (including grade checking in connection with pipelaying); Precast-manhole setter; Pressure pipe tester; Post hole digger, air, gas and electric; Power broom sweeper; Power tampers of all types (except as shown in Group 2); Ram set gun and stud gun; Riprap stonepaver and rock-slinger, including placing of sacked concrete and/or sand (wet or dry) and gabions and similar type; Rotary scarifier or multiple head concrete chipping scarifier; Roto and Ditch Witch; Rototiller; Sandblaster, pot, gun, nozzle operators; Signalling and rigging; Tank cleaner; Tree climber; Turbo blaster; Vibrascreed, bull float in connection with laborers' work; Vibrator; Hazardous waste worker (lead removal); Asbestos and mold removal worker

GROUP 1-a: Joy drill model TWM-2A; Gardner-Denver model DH143 and similar type drills; Track driller; Jack leg driller; Wagon driller; Mechanical drillers, all types regardless of type or method of power; Mechanical pipe layers, all types regardless of type or method of power; Blaster and powder; All work of loading, placing and blasting of all powder and explosives of whatever type regardless of method used for such loading and placing; High scalers (including drilling of same); Tree topper; Bit grinder

GROUP 1-b: Sewer cleaners shall receive $4.00 per day above Group 1 wage rates. "Sewer cleaner" means any worker who

CONFORMED

handles or comes in contact with raw sewage in small diameter sewers. Those who work inside recently active, large diameter sewers, and all recently active sewer manholes shal receive $5.00 per day above Group 1 wage rates.

GROUP 1-c: Burning and welding in connection with laborers' work; Synthetic thermoplastics and similar type welding

GROUP 1-d: Maintenance and repair track and road beds. All employees performing work covered herein shall receive $ .25 per hour above their regular rate for all work performed on underground structures not specifically covered herein. This paragraph shall not be construed to apply to work below ground level in open cut. It shall apply to cut and cover work of subway construction after the temporary cover has been placed.

GROUP 1-e: Work on and/or in bell hole footings and shafts thereof, and work on and in deep footings. (A deep footing is a hole 15 feet or more in depth.) In the event the depth of the footing is unknown at the commencement of excavation, and the final depth exceeds 15 feet, the deep footing wage rate would apply to all employees for each and every day worked on or in the excavation of the footing from the date of inception.

GROUP 1-f: Wire winding machine in connection with guniting or shot crete

GROUP 1-g, CONTRA COSTA COUNTY: Pipelayer (including grade checking in connection with pipelaying); Caulker; Bander; Pipewrapper; Conduit layer; Plastic pipe layer; Pressure pipe tester; No joint pipe and stripping of same, including repair of voids; Precast manhole setters, cast in place manhole form setters

GROUP 2: Asphalt shoveler; Cement dumper and handling dry cement or gypsum; Choke-setter and rigger (clearing work); Concrete bucket dumper and chute; Concrete chipping and grinding; Concrete laborer (wet or dry); Driller tender, chuck tender, nipper; Guinea chaser (stake), grout crew; High pressure nozzle, adductor; Hydraulic monitor (over 100 lbs. pressure); Loading and unloading, carrying and hauling of all rods and materials for use in reinforcing concrete construction; Pittsburgh chipper and similar type brush shredders; Sloper; Single foot, hand-held, pneumatic tamper; All pneumatic, air, gas and electric tools not listed in Groups 1 through 1-f; Jacking of pipe - under 12 inches

GROUP 3: Construction laborers, including bridge and general laborer; Dump, load spotter; Flag person; Fire watcher; Fence erector; Guardrail erector; Gardener, horticultural and landscape laborer; Jetting; Limber, brush loader and piler; Pavement marker (button setter); Maintenance, repair track and road beds; Streetcar and railroad construction track laborer; Temporary air and water lines, Victaulic or similar; Tool room attendant (jobsite only)

CONFORMED

GROUP 4: Final clean-up work of debris, grounds and building including but not limited to: street cleaner; cleaning and washing windows; brick cleaner (jobsite only); material cleaner (jobsite only). The classification "material cleaner" is to be utilized under the following conditions:
A: at demolition site for the salvage of the material.
B: at the conclusion of a job where the material is to be salvaged and stocked to be reused on another job.
C: for the cleaning of salvage material at the jobsite or temporary jobsite yard.

The material cleaner classification should not be used in the performance of "form stripping, cleaning and oiling and moving to the next point of erection".

GUNITE LABORER CLASSIFICATIONS

GROUP 1: Structural Nozzleman

GROUP 2: Nozzleman, Gunman, Potman, Groundman

GROUP 3: Reboundman

GROUP 4: Gunite laborer

WRECKING WORK LABORER CLASSIFICATIONS

GROUP 1: Skilled wrecker (removing and salvaging of sash, windows and materials)

GROUP 2: Semi-skilled wrecker (salvaging of other building materials)

LABO0073-002 06/30/2014

CALAVERAS AND SAN JOAQUIN COUNTIES

	Rates	Fringes
LABORER (TRAFFIC CONTROL/LANE CLOSURE)		
Escort Driver, Flag Person	$ 27.14	19.03
Traffic Control Person I	$ 27.44	19.03
Traffic Control Person II	$ 24.94	19.03

TRAFFIC CONTROL PERSON I: Layout of traffic control, crash cushions, construction area and roadside signage.

TRAFFIC CONTROL PERSON II: Installation and removal of temporary/permanent signs, markers, delineators and crash cushions.

LABO0073-003 06/30/2014

CONFORMED

SAN JOAQUIN COUNTY

	Rates	Fringes
LABORER		
Mason Tender-Brick	$ 31.11	17.34

LABO0073-005 06/30/2014

	Rates	Fringes
Tunnel and Shaft Laborers:		
GROUP 1	$ 34.60	19.49
GROUP 2	$ 34.37	19.49
GROUP 3	$ 34.12	19.49
GROUP 4	$ 33.67	19.49
GROUP 5	$ 33.13	19.49
Shotcrete Specialist	$ 35.12	19.49

TUNNEL AND SHAFT CLASSIFICATIONS

GROUP 1: Diamond driller; Groundmen; Gunite and shotcrete nozzlemen

GROUP 2: Rodmen; Shaft work & raise (below actual or excavated ground level)

GROUP 3: Bit grinder; Blaster, driller, powdermen, heading; Cherry pickermen - where car is lifted; Concrete finisher in tunnel; Concrete screedman; Grout pumpman and potman; Gunite & shotcrete gunman & potman; Headermen; High pressure nozzleman; Miner - tunnel, including top and bottom man on shaft and raise work; Nipper; Nozzleman on slick line; Sandblaster - potman, Robotic Shotcrete Placer, Segment Erector, Tunnel Muck Hauler, Steel Form raiser and setter; Timberman, retimberman (wood or steel or substitute materials therefore); Tugger (for tunnel laborer work); Cable tender; Chuck tender; Powderman - primer house

GROUP 4: Vibrator operator, pavement breaker; Bull gang - muckers, trackmen; Concrete crew - includes rodding and spreading, Dumpmen (any method)

GROUP 5: Grout crew; Reboundman; Swamper/ Brakeman

LABO0166-001 07/01/2006

ALAMEDA AND CONTRA COSTA COUNTIES:

	Rates	Fringes
Brick Tender	$ 25.91	14.65

FOOTNOTES: Work on jobs where heat-protective clothing is required: $2.00 per hour additional. Work at grinders: $.25 per hour additional. Manhole work: $2.00 per day additional.

LABO0166-002 07/01/2007

CONFORMED

SAN FRANCISCO AND SAN MATEO COUNTIES:

	Rates	Fringes
MASON TENDER, BRICK	$ 26.93	16.50

FOOTNOTES: Underground work such as sewers, manholes, catch basins, sewer pipes, telephone conduits, tunnels and cut trenches: $5.00 per day additional. Work in live sewage: $2.50 per day additional.

LABO0261-003 06/30/2014

SAN FRANCISCO AND SAN MATEO COUNTIES

	Rates	Fringes
LABORER (TRAFFIC CONTROL/LANE CLOSURE)		
Escort Driver, Flag Person	$ 28.14	19.03
Traffic Control Person I	$ 28.44	19.03
Traffic Control Person II	$ 25.94	19.03

TRAFFIC CONTROL PERSON I: Layout of traffic control, crash cushions, construction area and roadside signage.

TRAFFIC CONTROL PERSON II: Installation and removal of temporary/permanent signs, markers, delineators and crash cushions.

LABO0261-005 06/30/2014

SAN FRANCISCO AND SAN MATEO COUNTIES

	Rates	Fringes
Tunnel and Shaft Laborers:		
GROUP 1	$ 34.60	19.49
GROUP 2	$ 34.37	19.49
GROUP 3	$ 34.12	19.49
GROUP 4	$ 33.67	19.49
GROUP 5	$ 33.13	19.49
Shotcrete Specialist	$ 35.12	19.49

TUNNEL AND SHAFT CLASSIFICATIONS

GROUP 1: Diamond driller; Groundmen; Gunite and shotcrete nozzlemen

GROUP 2: Rodmen; Shaft work & raise (below actual or excavated ground level)

GROUP 3: Bit grinder; Blaster, driller, powdermen, heading; Cherry pickermen - where car is lifted; Concrete finisher in tunnel; Concrete screedman; Grout pumpman and potman; Gunite & shotcrete gunman & potman; Headermen; High pressure nozzleman; Miner - tunnel, including top and

CONFORMED

bottom man on shaft and raise work; Nipper; Nozzleman on slick line; Sandblaster - potman, Robotic Shotcrete Placer, Segment Erector, Tunnel Muck Hauler, Steel Form raiser and setter; Timberman, retimberman (wood or steel or substitute materials therefore); Tugger (for tunnel laborer work); Cable tender; Chuck tender; Powderman - primer house

GROUP 4: Vibrator operator, pavement breaker; Bull gang - muckers, trackmen; Concrete crew - includes rodding and spreading, Dumpmen (any method)

GROUP 5: Grout crew; Reboundman; Swamper/ Brakeman

LABO0270-003 06/30/2014

AREA A: SANTA CLARA

AREA B: MONTEREY, SAN BENITO AND SANTA CRUZ COUNTIES

	Rates	Fringes
LABORER (TRAFFIC CONTROL/LANE CLOSURE)		
Escort Driver, Flag Person		
Area A	$ 28.14	19.03
Area B	$ 27.14	19.03
Traffic Control Person I		
Area A	$ 28.44	19.03
Area B	$ 27.44	19.03
Traffic Control Person II		
Area A	$ 25.94	19.03
Area B	$ 24.94	19.03

TRAFFIC CONTROL PERSON I: Layout of traffic control, crash cushions, construction area and roadside signage.

TRAFFIC CONTROL PERSON II: Installation and removal of temporary/permanent signs, markers, delineators and crash cushions.

LABO0270-004 06/30/2014

MONTEREY, SAN BENITO, SANTA CLARA, AND SANTA CRUZ COUNTIES

	Rates	Fringes
Tunnel and Shaft Laborers:		
GROUP 1	$ 34.60	19.49
GROUP 2	$ 34.37	19.49
GROUP 3	$ 34.12	19.49
GROUP 4	$ 33.67	19.49
GROUP 5	$ 33.13	19.49
Shotcrete Specialist	$ 35.12	19.49

TUNNEL AND SHAFT CLASSIFICATIONS

GROUP 1: Diamond driller; Groundmen; Gunite and shotcrete

CONFORMED

nozzlemen

GROUP 2: Rodmen; Shaft work & raise (below actual or excavated ground level)

GROUP 3: Bit grinder; Blaster, driller, powdermen, heading; Cherry pickermen - where car is lifted; Concrete finisher in tunnel; Concrete screedman; Grout pumpman and potman; Gunite & shotcrete gunman & potman; Headermen; High pressure nozzleman; Miner - tunnel, including top and bottom man on shaft and raise work; Nipper; Nozzleman on slick line; Sandblaster - potman, Robotic Shotcrete Placer, Segment Erector, Tunnel Muck Hauler, Steel Form raiser and setter; Timberman, retimberman (wood or steel or substitute materials therefore); Tugger (for tunnel laborer work); Cable tender; Chuck tender; Powderman - primer house

GROUP 4: Vibrator operator, pavement breaker; Bull gang - muckers, trackmen; Concrete crew - includes rodding and spreading, Dumpmen (any method)

GROUP 5: Grout crew; Reboundman; Swamper/ Brakeman

LABO0270-005 07/01/2013

MONTEREY AND SAN BENITO COUNTIES

	Rates	Fringes
LABORER		
Mason Tender-Brick	$ 31.70	16.53

LABO0294-001 06/30/2014

FRESNO, KINGS AND MADERA COUNTIES

	Rates	Fringes
LABORER (Brick)		
Mason Tender-Brick	$ 31.11	17.34

LABO0294-002 06/30/2014

FRESNO, KINGS, AND MADERA COUNTIES

	Rates	Fringes
LABORER (TRAFFIC CONTROL/LANE CLOSURE)		
Escort Driver, Flag Person	$ 27.14	19.03
Traffic Control Person I	$ 27.44	19.03
Traffic Control Person II	$ 24.94	19.03

TRAFFIC CONTROL PERSON I: Layout of traffic control, crash cushions, construction area and roadside signage.

TRAFFIC CONTROL PERSON II: Installation and removal of temporary/permanent signs, markers, delineators and crash cushions.

CONFORMED

LABO0294-005 06/30/2014

FRESNO, KINGS, AND MADERA COUNTIES

	Rates	Fringes
Tunnel and Shaft Laborers:		
GROUP 1	$ 34.60	19.49
GROUP 2	$ 34.37	19.49
GROUP 3	$ 34.12	19.49
GROUP 4	$ 33.67	19.49
GROUP 5	$ 33.13	19.49
Shotcrete Specialist	$ 35.12	19.49

TUNNEL AND SHAFT CLASSIFICATIONS

GROUP 1: Diamond driller; Groundmen; Gunite and shotcrete nozzlemen

GROUP 2: Rodmen; Shaft work & raise (below actual or excavated ground level)

GROUP 3: Bit grinder; Blaster, driller, powdermen, heading; Cherry pickermen - where car is lifted; Concrete finisher in tunnel; Concrete screedman; Grout pumpman and potman; Gunite & shotcrete gunman & potman; Headermen; High pressure nozzleman; Miner - tunnel, including top and bottom man on shaft and raise work; Nipper; Nozzleman on slick line; Sandblaster - potman, Robotic Shotcrete Placer, Segment Erector, Tunnel Muck Hauler, Steel Form raiser and setter; Timberman, retimberman (wood or steel or substitute materials therefore); Tugger (for tunnel laborer work); Cable tender; Chuck tender; Powderman - primer house

GROUP 4: Vibrator operator, pavement breaker; Bull gang - muckers, trackmen; Concrete crew - includes rodding and spreading, Dumpmen (any method)

GROUP 5: Grout crew; Reboundman; Swamper/ Brakeman

LABO0304-002 06/30/2014

ALAMEDA COUNTY

	Rates	Fringes
LABORER (TRAFFIC CONTROL/LANE CLOSURE)		
Escort Driver, Flag Person	$ 28.14	19.03
Traffic Control Person I	$ 28.44	19.03
Traffic Control Person II	$ 25.94	19.03

TRAFFIC CONTROL PERSON I: Layout of traffic control, crash cushions, construction area and roadside signage.

TRAFFIC CONTROL PERSON II: Installation and removal of temporary/permanent signs, markers, delineators and crash

CONFORMED

cushions.

LABO0304-003 06/30/2014

ALAMEDA COUNTY

	Rates	Fringes
Tunnel and Shaft Laborers:		
GROUP 1	$ 34.60	19.49
GROUP 2	$ 34.37	19.49
GROUP 3	$ 34.12	19.49
GROUP 4	$ 33.67	19.49
GROUP 5	$ 33.13	19.49
Shotcrete Specialist	$ 35.12	19.49

TUNNEL AND SHAFT CLASSIFICATIONS

GROUP 1: Diamond driller; Groundmen; Gunite and shotcrete nozzlemen

GROUP 2: Rodmen; Shaft work & raise (below actual or excavated ground level)

GROUP 3: Bit grinder; Blaster, driller, powdermen, heading; Cherry pickermen - where car is lifted; Concrete finisher in tunnel; Concrete screedman; Grout pumpman and potman; Gunite & shotcrete gunman & potman; Headermen; High pressure nozzleman; Miner - tunnel, including top and bottom man on shaft and raise work; Nipper; Nozzleman on slick line; Sandblaster - potman, Robotic Shotcrete Placer, Segment Erector, Tunnel Muck Hauler, Steel Form raiser and setter; Timberman, retimberman (wood or steel or substitute materials therefore); Tugger (for tunnel laborer work); Cable tender; Chuck tender; Powderman - primer house

GROUP 4: Vibrator operator, pavement breaker; Bull gang - muckers, trackmen; Concrete crew - includes rodding and spreading, Dumpmen (any method)

GROUP 5: Grout crew; Reboundman; Swamper/ Brakeman

LABO0324-002 06/30/2014

CONTRA COSTA COUNTY

	Rates	Fringes
LABORER (TRAFFIC CONTROL/LANE CLOSURE)		
Escort Driver, Flag Person	$ 28.14	19.03
Traffic Control Person I	$ 28.44	19.03
Traffic Control Person II	$ 25.94	19.03

TRAFFIC CONTROL PERSON I: Layout of traffic control, crash cushions, construction area and roadside signage.

TRAFFIC CONTROL PERSON II: Installation and removal of

CONFORMED

temporary/permanent signs, markers, delineators and crash cushions.

LABO0324-006 06/30/2014

CONTRA COSTA COUNTY

	Rates	Fringes
Tunnel and Shaft Laborers:		
GROUP 1	$ 34.60	19.49
GROUP 2	$ 34.37	19.49
GROUP 3	$ 34.12	19.49
GROUP 4	$ 33.67	19.49
GROUP 5	$ 33.13	19.49
Shotcrete Specialist	$ 35.12	19.49

TUNNEL AND SHAFT CLASSIFICATIONS

GROUP 1: Diamond driller; Groundmen; Gunite and shotcrete nozzlemen

GROUP 2: Rodmen; Shaft work & raise (below actual or excavated ground level)

GROUP 3: Bit grinder; Blaster, driller, powdermen, heading; Cherry pickermen - where car is lifted; Concrete finisher in tunnel; Concrete screedman; Grout pumpman and potman; Gunite & shotcrete gunman & potman; Headermen; High pressure nozzleman; Miner - tunnel, including top and bottom man on shaft and raise work; Nipper; Nozzleman on slick line; Sandblaster - potman, Robotic Shotcrete Placer, Segment Erector, Tunnel Muck Hauler, Steel Form raiser and setter; Timberman, retimberman (wood or steel or substitute materials therefore); Tugger (for tunnel laborer work); Cable tender; Chuck tender; Powderman - primer house

GROUP 4: Vibrator operator, pavement breaker; Bull gang - muckers, trackmen; Concrete crew - includes rodding and spreading, Dumpmen (any method)

GROUP 5: Grout crew; Reboundman; Swamper/ Brakeman

LABO1130-002 06/30/2014

MARIPOSA, MERCED, STANISLAUS, AND TUOLUMNE COUNTIES

	Rates	Fringes
LABORER (TRAFFIC CONTROL/LANE CLOSURE)		
Escort Driver, Flag Person	$ 27.14	19.03
Traffic Control Person I	$ 27.44	19.03
Traffic Control Person II	$ 24.94	19.03

TRAFFIC CONTROL PERSON I: Layout of traffic control, crash cushions, construction area and roadside signage.

CONFORMED

TRAFFIC CONTROL PERSON II: Installation and removal of temporary/permanent signs, markers, delineators and crash cushions.

LABO1130-003 06/30/2014

MARIPOSA, MERCED, STANISLAUS, AND TUOLUMNE COUNTIES

	Rates	Fringes
Tunnel and Shaft Laborers:		
GROUP 1	$ 34.60	19.49
GROUP 2	$ 34.37	19.49
GROUP 3	$ 34.12	19.49
GROUP 4	$ 33.67	19.49
GROUP 5	$ 33.13	19.49
Shotcrete Specialist	$ 35.12	19.49

TUNNEL AND SHAFT CLASSIFICATIONS

GROUP 1: Diamond driller; Groundmen; Gunite and shotcrete nozzlemen

GROUP 2: Rodmen; Shaft work & raise (below actual or excavated ground level)

GROUP 3: Bit grinder; Blaster, driller, powdermen, heading; Cherry pickermen - where car is lifted; Concrete finisher in tunnel; Concrete screedman; Grout pumpman and potman; Gunite & shotcrete gunman & potman; Headermen; High pressure nozzleman; Miner - tunnel, including top and bottom man on shaft and raise work; Nipper; Nozzleman on slick line; Sandblaster - potman, Robotic Shotcrete Placer, Segment Erector, Tunnel Muck Hauler, Steel Form raiser and setter; Timberman, retimberman (wood or steel or substitute materials therefore); Tugger (for tunnel laborer work); Cable tender; Chuck tender; Powderman - primer house

GROUP 4: Vibrator operator, pavement breaker; Bull gang - muckers, trackmen; Concrete crew - includes rodding and spreading, Dumpmen (any method)

GROUP 5: Grout crew; Reboundman; Swamper/ Brakeman

LABO1130-005 06/30/2014

MARIPOSA, MERCED, STANISLAUS AND TUOLUMNE COUNTIES

	Rates	Fringes
LABORER		
Mason Tender-Brick	$ 31.11	17.34

LABO1414-004 08/03/2016

SAN FRANCISCO AND SAN MATEO COUNTIES:

	Rates	Fringes

CONFORMED

PLASTER TENDER.....$ 34.15 19.28

Work on a swing stage scaffold: $1.00 per hour additional.

LABO1414-007 08/03/2016

CALAVERAS, FRESNO, KINGS, MADERA, MARIPOSA, MERCED, SAN JOAQUIN, STANISLAUS & TUOLUMNE

	Rates	Fringes
Plasterer tender.....$	34.15	19.28

Work on a swing stage scaffold: $1.00 per hour additional.

LABO1414-008 08/03/2016

ALAMEDA AND CONTRA COSTA COUNTIES:

	Rates	Fringes
Plasterer tender.....$	34.15	19.28

Work on a swing stage scaffold: $1.00 per hour additional.

LABO1414-010 08/03/2016

SANTA CLARA AND SANTA CRUZ COUNTIES

	Rates	Fringes
PLASTER TENDER		
4 Stories and under.....$	32.15	19.28
5 Stories and above.....$	34.15	19.28

Work on a swing stage scaffold: $1.00 per hour additional.

LABO1414-011 08/03/2016

MONTEREY AND SAN BENITO COUNTIES

	Rates	Fringes
Plasterer tender.....$	34.15	19.28

Work on a swing stage scaffold: $1.00 per hour additional.

PAIN0016-001 01/01/2017

ALAMEDA, CONTRA COSTA, MONTEREY, SAN BENITO, SAN MATEO, SANTA CLARA, AND SANTA CRUZ COUNTIES

	Rates	Fringes
Painters:.....$	38.87	22.83

PREMIUMS:

CONFORMED

EXOTIC MATERIALS - $0.75 additional per hour.
SPRAY WORK: - $0.50 additional per hour.
INDUSTRIAL PAINTING - $0.25 additional per hour
  [Work on industrial buildings used for the manufacture and processing of goods for sale or service; steel construction (bridges), stacks, towers, tanks, and similar structures]

HIGH WORK:
over 50 feet - $2.00 per hour additional
100 to 180 feet - $4.00 per hour additional
Over 180 feet - $6.00 per houir additional

PAIN0016-003 01/01/2017

AREA 1: ALAMEDA, CONTRA COSTA, SAN FRANCISCO, SAN MATEO & SANTA CLARA COUNTIES

AREA 2: CALAVERAS, MARIPOA, MERCED, MONTEREY, SAN BENITO, SAN JOAQUIN, SANTA CRUZ, STANISLAUS & TUOLUMNE COUNTIES

	Rates	Fringes
Drywall Finisher/Taper		
AREA 1	$ 44.16	25.64
AREA 2	$ 40.03	24.29

PAIN0016-012 01/01/2017

ALAMEDA, CONTRA COSTA, MARIPOSA, MERCED, MONTEREY, SAN BENITO, SAN FRANCISCO, SAN MATEO, SANTA CLARA AND SANTA CRUZ COUNTIES

	Rates	Fringes
SOFT FLOOR LAYER	$ 47.39	24.64

PAIN0016-015 01/01/2017

CALAVERAS, MARIPOSA, MERCED, SAN JOAQUIN, STANISLAUS & TUOLUMNE COUNTIES

	Rates	Fringes
PAINTER		
Brush	$ 32.16	18.26

FOOTNOTES:
SPRAY/SANDBLAST: $0.50 additional per hour.
EXOTIC MATERIALS: $1.00 additional per hour.
  HIGH TIME: Over 50 ft above ground or water level $2.00 additional per hour. 100 to 180 ft above ground or water level $4.00 additional per hour. Over 180 ft above ground or water level $6.00 additional per hour.

PAIN0016-022 01/01/2017

CONFORMED

SAN FRANCISCO COUNTY

	Rates	Fringes
PAINTER	$ 42.49	22.83

PAIN0169-001 01/01/2017

FRESNO, KINGS, MADERA, MARIPOSA AND MERCED COUNTIES:

	Rates	Fringes
GLAZIER	$ 34.93	24.03

PAIN0169-005 01/01/2017

ALAMEDA CONTRA COSTA, MONTEREY, SAN BENITO, SAN FRANCISCO, SAN MATEO, SANTA CLARA & SANTA CRUZ COUNTIES

	Rates	Fringes
GLAZIER	$ 45.13	26.79

PAIN0294-004 01/01/2015

FRESNO, KINGS AND MADERA COUNTIES

	Rates	Fringes
PAINTER		
Brush, Roller	$ 25.67	15.68
Drywall Finisher/Taper	$ 30.47	16.81

FOOTNOTE:
Spray Painters & Paperhangers recive $1.00 additional per hour. Painters doing Drywall Patching receive $1.25 additional per hour. Lead Abaters & Sandblasters receive $1.50 additional per hour. High Time - over 30 feet (does not include work from a lift) $0.75 per hour additional.

PAIN0294-005 01/01/2015

FRESNO, KINGS & MADERA

	Rates	Fringes
SOFT FLOOR LAYER	$ 30.83	17.39

PAIN0767-001 01/01/2017

CALAVERAS, SAN JOAQUIN, STANISLAUS AND TUOLUMNE COUNTIES:

	Rates	Fringes
GLAZIER	$ 34.57	25.96

PAID HOLIDAYS: New Year's Day, Martin Luther King, Jr. Day,

CONFORMED

President's Day, Memorial Day, Independence Day, Labor Day, Veteran's Day, Thanksgiving Day, and Christmas Day.

Employee rquired to wear a body harness shall receive $1.50 per hour above the basic hourly rate at any elevation.

PAIN1176-001 07/01/2014

HIGHWAY IMPR0VEMENT

	Rates	Fringes
Parking Lot Striping/Highway Marking:		
GROUP 1	$ 34.26	11.65
GROUP 2	$ 29.12	11.65
GROUP 3	$ 29.46	11.65

CLASSIFICATIONS

GROUP 1: Striper: Layout and application of painted traffic stripes and marking; hot thermo plastic; tape, traffic stripes and markings

GROUP 2: Gamecourt & Playground Installer

GROUP 3: Protective Coating, Pavement Sealing

PAIN1237-003 01/01/2017

CALAVERAS; SAN JOAQUIN COUNTIES; STANISLAUS AND TUOLUMNE COUNTIES:

	Rates	Fringes
SOFT FLOOR LAYER	$ 33.93	20.39

PLAS0066-002 07/01/2016

ALAMEDA, CONTRA COSTA, SAN MATEO AND SAN FRANCISCO COUNTIES:

	Rates	Fringes
PLASTERER	$ 39.52	35.37

PLAS0300-001 07/01/2014

	Rates	Fringes
PLASTERER		
AREA 188: Fresno	$ 29.44	22.26
AREA 224: San Benito, Santa Clara, Santa Cruz	$ 31.59	22.26
AREA 295: Calaveras & San Joaquin Couonties	$ 31.41	22.26
AREA 337: Monterey County	$ 30.52	22.26
AREA 429: Mariposa,		

CONFORMED

```
     Merced, Stanislaus,
     Tuolumne Counties..........$ 31.41            22.26
----------------------------------------------------------------
 PLAS0300-005 07/01/2016

                                  Rates          Fringes

CEMENT MASON/CONCRETE FINISHER...$ 37.74            19.37
----------------------------------------------------------------
 PLUM0038-001 07/01/2016

SAN FRANCISCO COUNTY

                                  Rates          Fringes

PLUMBER (Plumber,
Steamfitter, Refrigeration
Fitter)........................$ 68.00            45.09
----------------------------------------------------------------
 PLUM0038-005 07/01/2016

SAN FRANCISCO COUNTY

                                  Rates          Fringes

Landscape/Irrigation Fitter
(Underground/Utility Fitter).....$ 57.80            33.46
----------------------------------------------------------------
 PLUM0062-001 01/01/2017

MONTEREY AND SANTA CRUZ COUNTIES

                                  Rates          Fringes

PLUMBER & STEAMFITTER............$ 41.90            29.59
----------------------------------------------------------------
 PLUM0159-001 07/01/2016

CONTRA COSTA COUNTY

                                  Rates          Fringes

Plumber and steamfitter
     (1) Refrigeration...........$ 55.03            34.46
     (2) All other work..........$ 55.92            34.44
----------------------------------------------------------------
 PLUM0246-001 01/01/2017

FRESNO, KINGS & MADERA COUNTIES

                                  Rates          Fringes

PLUMBER & STEAMFITTER............$ 38.40            29.39
----------------------------------------------------------------
 PLUM0246-004 01/01/2017

FRESNO, MERCED & SAN JOAQUIN COUNIES

                                  Rates          Fringes
```

CONFORMED

PLUMBER (PIPE TRADESMAN).....$ 13.00 10.74

PIPE TRADESMAN SCOPE OF WORK:
Installation of corrugated metal piping for drainage, as well as installation of corrugated metal piping for culverts in connection with storm sewers and drains; Grouting, dry packing and diapering of joints, holes or chases including paving over joints, in piping; Temporary piping for dirt work for building site preparation; Operating jack hammers, pavement breakers, chipping guns, concrete saws and spades to cut holes, chases and channels for piping systems; Digging, grading, backfilling and ground preparation for all types of pipe to all points of the jobsite; Ground preparation including ground leveling, layout and planting of shrubbery, trees and ground cover, including watering, mowing, edging, pruning and fertilizing, the breaking of concrete, digging, backfilling and tamping for the preparation and completion of all work in connection with lawn sprinkler and landscaping; Loading, unloading and distributing materials at jobsite; Putting away materials in storage bins in jobsite secure storage area; Demolition of piping and fixtures for remodeling and additions; Setting up and tearing down work benches, ladders and job shacks; Clean-up and sweeping of jobsite; Pipe wrapping and waterproofing where tar or similar material is applied for protection of buried piping; Flagman

---

PLUM0342-001 07/01/2016

ALAMEDA & CONTRA COSTA COUNTIES

	Rates	Fringes
PIPEFITTER		
CONTRA COSTA COUNTY	$ 56.56	40.74
PLUMBER, PIPEFITTER, STEAMFITTER		
ALAMEDA COUNTY	$ 56.56	40.74

PLUM0355-004 07/01/2015

ALAMEDA, CALAVERAS, CONTRA COSTA, FRESNO, KINGS, MADERA, MARIPOSA, MERCED, MONTEREY, SAN BENITO, SAN JOAQUIN, SAN MATEO, SANTA CLARA, SANTA CRUZ, STANISLAUS, AND TUOLUMNE COUNTIES:

	Rates	Fringes
Underground Utility Worker		
/Landscape Fitter	$ 28.60	10.05

PLUM0393-001 07/01/2016

SAN BENITO AND SANTA CLARA COUNTIES

	Rates	Fringes
PLUMBER/PIPEFITTER	$ 58.91	38.58

CONFORMED

PLUM0442-001 01/01/2017

CALAVERAS, MARIPOSA, MERCED, SAN JOAQUIN, STANISLAUS & TUOLUMNE COUNTIES

	Rates	Fringes
PLUMBER & STEAMFITTER	$ 40.00	28.39

PLUM0467-001 07/01/2016

SAN MATEO COUNTY

	Rates	Fringes
Plumber/Pipefitter/Steamfitter	$ 60.70	33.46

ROOF0027-002 01/01/2017

FRESNO, KINGS, AND MADERA COUNTIES

	Rates	Fringes
ROOFER	$ 26.01	14.21

FOOTNOTE: Work with pitch, pitch base of pitch impregnated products or any material containing coal tar pitch, on any building old or new, where both asphalt and pitchers are used in the application of a built-up roof or tear off: $2.00 per hour additional.

ROOF0040-002 08/01/2015

SAN FRANCISCO & SAN MATEO COUNTIES:

	Rates	Fringes
ROOFER	$ 35.50	15.82

ROOF0081-001 08/01/2015

ALAMEDA AND CONTRA COSTA COUNTIES:

	Rates	Fringes
Roofer	$ 36.08	14.90

ROOF0081-004 08/01/2015

CALAVERAS, MARIPOSA, MERCED, SAN JOAQUIN, STANISLAUS AND TUOLUMNE COUNTIES:

	Rates	Fringes
ROOFER	$ 32.71	14.65

ROOF0095-002 08/01/2015

CONFORMED

MONTEREY, SAN BENITO, SANTA CLARA, AND SANTA CRUZ COUNTIES:

	Rates	Fringes
ROOFER		
Journeyman	$ 37.55	15.52
Kettle person (2 kettles); Bitumastic, Enameler, Coal Tar, Pitch and Mastic worker	$ 39.55	15.52

SFCA0483-001 01/01/2017

ALAMEDA, CONTRA COSTA, SAN FRANCISCO, SAN MATEO AND SANTA CLARA COUNTIES:

	Rates	Fringes
SPRINKLER FITTER (FIRE)	$ 58.72	28.07

SFCA0669-011 04/01/2016

CALAVERAS, FRESNO, KINGS, MADERA, MARIPOSA, MERCED, MONTEREY, SAN BENITO, SAN JOAQUIN, SANTA CRUZ, STANISLAUS AND TUOLUMNE COUNTIES:

	Rates	Fringes
SPRINKLER FITTER	$ 35.71	20.25

SHEE0104-001 01/01/2017

AREA 1: ALAMEDA, CONTRA COSTA, SAN FRANCISCO, SAN MATEO, SANTA CLARA

AREA 2: MONTEREY & SAN BENITO

AREA 3: SANTA CRUZ

	Rates	Fringes
SHEET METAL WORKER		
AREA 1:		
Mechanical Contracts under $200,000	$ 48.23	36.45
All Other Work	$ 54.58	37.08
AREA 2	$ 34.96	34.21
AREA 3	$ 38.28	33.01

SHEE0104-003 07/01/2016

CALAVERAS AND SAN JOAQUIN COUNTIES:

	Rates	Fringes
SHEET METAL WORKER	$ 38.12	30.50

CONFORMED

SHEE0104-005 07/01/2016

MARIPOSA, MERCED, STANISLAUS AND TUOLUMNE COUNTIES:

	Rates	Fringes
SHEET METAL WORKER (Excluding metal deck and siding)	$ 36.88	33.30

SHEE0104-007 07/01/2016

FRESNO, KINGS, AND MADERA COUNTIES:

	Rates	Fringes
SHEET METAL WORKER	$ 36.15	33.70

SHEE0104-015 07/01/2016

ALAMEDA, CONTRA COSTA, MONTEREY, SAN BENITO, SAN FRANCISCO, SAN MATEO, SANTA CLARA AND SANTA CRUZ COUNTIES:

	Rates	Fringes
SHEET METAL WORKER (Metal Decking and Siding only)	$ 35.64	31.49

SHEE0104-018 07/01/2016

CALAVERAS, FRESNO, KINGS, MADERA, MARIPOSA, MERCED, SAN JOAQUIN, STANISLAUS AND TUOLUMNE COUNTIES:

	Rates	Fringes
Sheet metal worker (Metal decking and siding only)	$ 35.64	31.49

TEAM0094-001 07/01/2016

	Rates	Fringes
Truck drivers:		
GROUP 1	$ 29.63	26.66
GROUP 2	$ 29.93	26.66
GROUP 3	$ 30.23	26.66
GROUP 4	$ 30.58	26.66
GROUP 5	$ 30.93	26.66

FOOTNOTES:

Articulated dump truck; Bulk cement spreader (with or without auger); Dumpcrete truck; Skid truck (debris box); Dry pre-batch concrete mix trucks; Dumpster or similar type; Slurry truck: Use dump truck yardage rate.

Heater planer; Asphalt burner; Scarifier burner; Industrial lift truck (mechanical tailgate); Utility and clean-up truck: Use appropriate rate for the power unit or the equipment utilized.

CONFORMED

TRUCK DRIVER CLASSIFICATIONS

GROUP 1: Dump trucks, under 6 yds.; Single unit flat rack (2-axle unit); Nipper truck (when flat rack truck is used appropriate flat rack shall apply); Concrete pump truck (when flat rack truck is used appropriate flat rack shall apply); Concrete pump machine; Fork lift and lift jitneys; Fuel and/or grease truck driver or fuel person; Snow buggy; Steam cleaning; Bus or personhaul driver; Escort or pilot car driver; Pickup truck; Teamster oiler/greaser and/or serviceperson; Hook tender (including loading and unloading); Team driver; Tool room attendant (refineries)

GROUP 2: Dump trucks, 6 yds. and under 8 yds.; Transit mixers, through 10 yds.; Water trucks, under 7,000 gals.; Jetting trucks, under 7,000 gals.; Single-unit flat rack (3-axle unit); Highbed heavy duty transport; Scissor truck; Rubber-tired muck car (not self-loaded); Rubber-tired truck jumbo; Winch truck and "A" frame drivers; Combination winch truck with hoist; Road oil truck or bootperson; Buggymobile; Ross, Hyster and similar straddle carriers; Small rubber-tired tractor

GROUP 3: Dump trucks, 8 yds. and including 24 yds.; Transit mixers, over 10 yds.; Water trucks, 7,000 gals. and over; Jetting trucks, 7,000 gals. and over; Vacuum trucks under 7500 gals. Trucks towing tilt bed or flat bed pull trailers; Lowbed heavy duty transport; Heavy duty transport tiller person; Self- propelled street sweeper with self-contained refuse bin; Boom truck - hydro-lift or Swedish type extension or retracting crane; P.B. or similar type self-loading truck; Tire repairperson; Combination bootperson and road oiler; Dry distribution truck (A bootperson when employed on such equipment, shall receive the rate specified for the classification of road oil trucks or bootperson); Ammonia nitrate distributor, driver and mixer; Snow Go and/or plow

GROUP 4: Dump trucks, over 25 yds. and under 65 yds.; Water pulls - DW 10's, 20's, 21's and other similar equipment when pulling Aqua/pak or water tank trailers; Helicopter pilots (when transporting men and materials); Lowbedk Heavy Duty Transport up to including 7 axles; DW10's, 20's, 21's and other similar Cat type, Terra Cobra, LeTourneau Pulls, Tournorocker, Euclid and similar type equipment when pulling fuel and/or grease tank trailers or other miscellaneous trailers; Vacuum Trucks 7500 gals and over and truck repairman

GROUP 5: Dump trucks, 65 yds. and over; Holland hauler; Low bed Heavy Duty Transport over 7 axles

---

WELDERS - Receive rate prescribed for craft performing operation to which welding is incidental.

==========

CONFORMED

Note: Executive Order (EO) 13706, Establishing Paid Sick Leave for Federal Contractors applies to all contracts subject to the Davis-Bacon Act for which the contract is awarded (and any solicitation was issued) on or after January 1, 2017. If this contract is covered by the EO, the contractor must provide employees with 1 hour of paid sick leave for every 30 hours they work, up to 56 hours of paid sick leave each year. Employees must be permitted to use paid sick leave for their own illness, injury or other health-related needs, including preventive care; to assist a family member (or person who is like family to the employee) who is ill, injured, or has other health-related needs, including preventive care; or for reasons resulting from, or to assist a family member (or person who is like family to the employee) who is a victim of, domestic violence, sexual assault, or stalking. Additional information on contractor requirements and worker protections under the EO is available at www.dol.gov/whd/govcontracts.

Unlisted classifications needed for work not included within the scope of the classifications listed may be added after award only as provided in the labor standards contract clauses (29CFR 5.5 (a) (1) (ii)).

The body of each wage determination lists the classification and wage rates that have been found to be prevailing for the cited type(s) of construction in the area covered by the wage determination. The classifications are listed in alphabetical order of "identifiers" that indicate whether the particular rate is a union rate (current union negotiated rate for local), a survey rate (weighted average rate) or a union average rate (weighted union average rate).

Union Rate Identifiers

A four letter classification abbreviation identifier enclosed in dotted lines beginning with characters other than "SU" or "UAVG" denotes that the union classification and rate were prevailing for that classification in the survey. Example: PLUM0198-005 07/01/2014. PLUM is an abbreviation identifier of the union which prevailed in the survey for this classification, which in this example would be Plumbers. 0198 indicates the local union number or district council number where applicable, i.e., Plumbers Local 0198. The next number, 005 in the example, is an internal number used in processing the wage determination. 07/01/2014 is the effective date of the most current negotiated rate, which in this example is July 1, 2014.

Union prevailing wage rates are updated to reflect all rate changes in the collective bargaining agreement (CBA) governing this classification and rate.

Survey Rate Identifiers

Classifications listed under the "SU" identifier indicate that

CONFORMED

no one rate prevailed for this classification in the survey and the published rate is derived by computing a weighted average rate based on all the rates reported in the survey for that classification. As this weighted average rate includes all rates reported in the survey, it may include both union and non-union rates. Example: SULA2012-007 5/13/2014. SU indicates the rates are survey rates based on a weighted average calculation of rates and are not majority rates. LA indicates the State of Louisiana. 2012 is the year of survey on which these classifications and rates are based. The next number, 007 in the example, is an internal number used in producing the wage determination. 5/13/2014 indicates the survey completion date for the classifications and rates under that identifier.

Survey wage rates are not updated and remain in effect until a new survey is conducted.

Union Average Rate Identifiers

Classification(s) listed under the UAVG identifier indicate that no single majority rate prevailed for those classifications; however, 100% of the data reported for the classifications was union data. EXAMPLE: UAVG-OH-0010 08/29/2014. UAVG indicates that the rate is a weighted union average rate. OH indicates the state. The next number, 0010 in the example, is an internal number used in producing the wage determination. 08/29/2014 indicates the survey completion date for the classifications and rates under that identifier.

A UAVG rate will be updated once a year, usually in January of each year, to reflect a weighted average of the current negotiated/CBA rate of the union locals from which the rate is based.

WAGE DETERMINATION APPEALS PROCESS

1.) Has there been an initial decision in the matter? This can be:

* an existing published wage determination
* a survey underlying a wage determination
* a Wage and Hour Division letter setting forth a position on a wage determination matter
* a conformance (additional classification and rate) ruling

On survey related matters, initial contact, including requests for summaries of surveys, should be with the Wage and Hour Regional Office for the area in which the survey was conducted because those Regional Offices have responsibility for the Davis-Bacon survey program. If the response from this initial contact is not satisfactory, then the process described in 2.) and 3.) should be followed.

With regard to any other matter not yet ripe for the formal process described here, initial contact should be with the Branch of Construction Wage Determinations. Write to:

CONFORMED

Branch of Construction Wage Determinations
Wage and Hour Division
U.S. Department of Labor
200 Constitution Avenue, N.W.
Washington, DC 20210

2.) If the answer to the question in 1.) is yes, then an interested party (those affected by the action) can request review and reconsideration from the Wage and Hour Administrator (See 29 CFR Part 1.8 and 29 CFR Part 7). Write to:

Wage and Hour Administrator
U.S. Department of Labor
200 Constitution Avenue, N.W.
Washington, DC 20210

The request should be accompanied by a full statement of the interested party's position and by any information (wage payment data, project description, area practice material, etc.) that the requestor considers relevant to the issue.

3.) If the decision of the Administrator is not favorable, an interested party may appeal directly to the Administrative Review Board (formerly the Wage Appeals Board). Write to:

Administrative Review Board
U.S. Department of Labor
200 Constitution Avenue, N.W.
Washington, DC 20210

4.) All decisions by the Administrative Review Board are final.

==========

END OF GENERAL DECISION

APPENDIX B

TURLOCK IRRIGATION DISTRICT DRAWING OF PROPOSED UNDERGROUND FACILITIES REPLACING OVERHEAD FACILITIES

CONFORMED

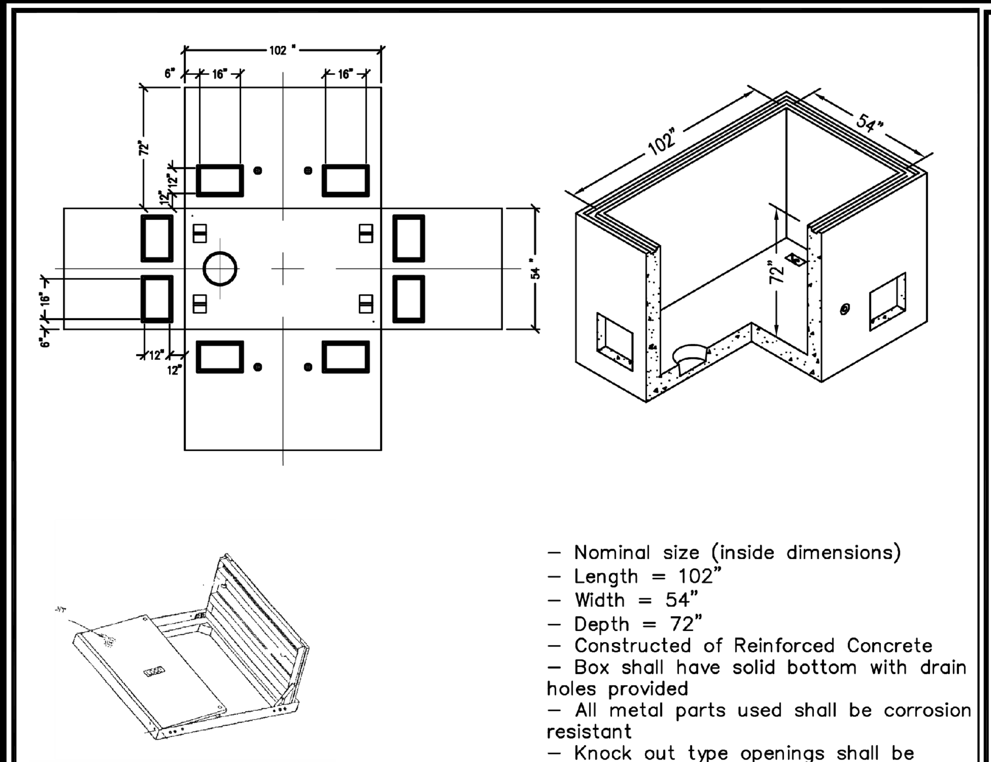

- Cover to be 4'-6" X 8'-6" nominal.
- Rated for incidental traffic.
- Quick release.
- Covers shall be skid resistant.
- Aluminum Plate and Frame.
- Cover shall be bolted or locked into position using penta-head bolts.
- Penta-head bolts shall be 3/8 x 16UNC x 2.75.
- Cover shall have two blank plates with Plexiglas covers
- Cover shall be marked "T.I.D." "ELECTRIC".
- Opening cover shall be torsion hinged or spring assist with hold open latches.
- Use Madruga Ironworks # 4'6"x8'6" T.I.D or equivalent.

— Nominal size (inside dimensions)
— Length = 102"
— Width = 54"
— Depth = 72"
— Constructed of Reinforced Concrete
— Box shall have solid bottom with drain holes provided
— All metal parts used shall be corrosion resistant
— Knock out type openings shall be provided on all four sides
— Knock outs shall be located within 12" of bottom and 6" of sidewall
— Knock outs shall be as shown in drawing
— Four pulling eyes are required for installation of conductors
— All segments of the design box shall be rated at a live load of 12,000 pounds per AASHTO and ASTM C857

EXTRA LARGE PULL BOX
TID STOCK # U-2146-5

SPECIFICATION PULL BOX	MATERIAL STANDARDS
	SHEET 3 OF 3 — 2021 I — DWG. NO. — PAGE

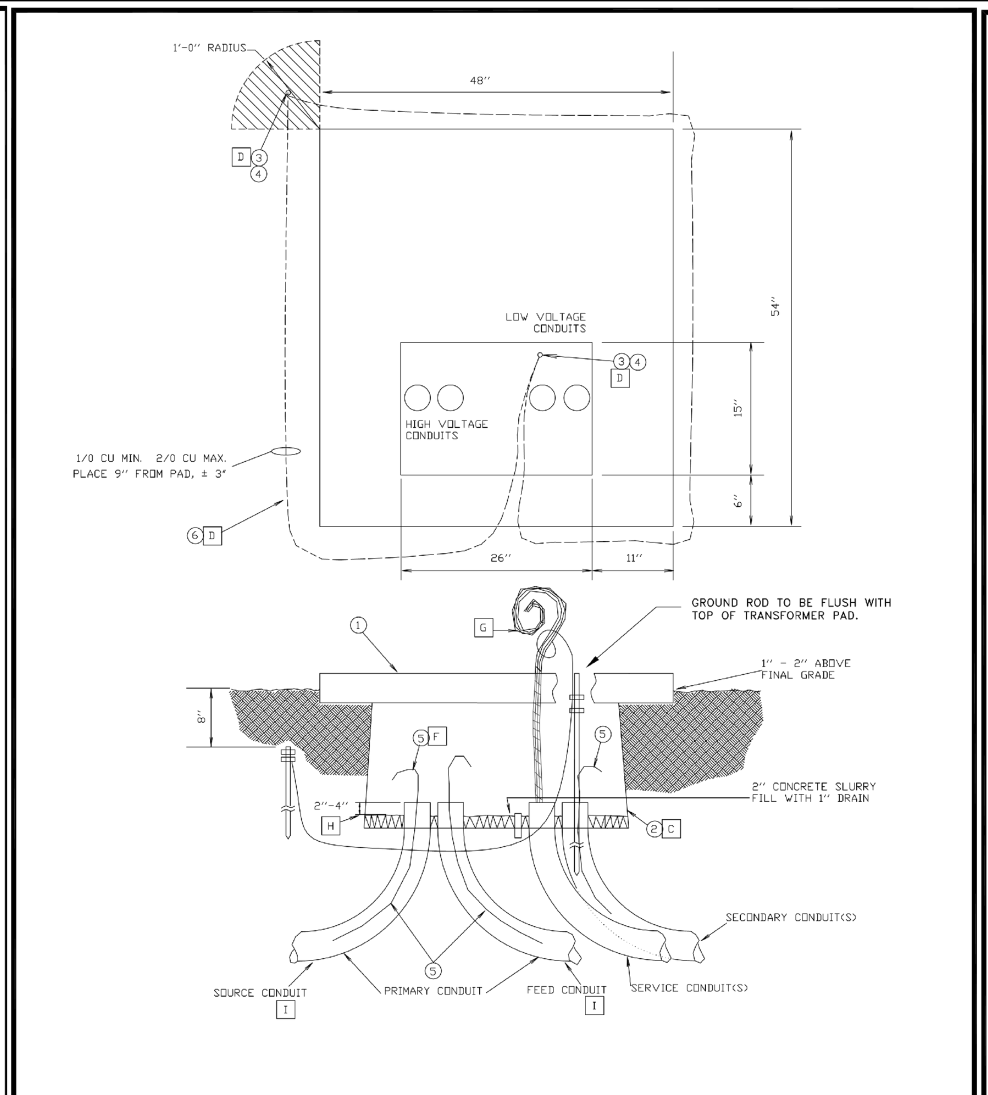

	TURLOCK IRRIGATION DISTRICT							CONSTRUCTION STANDARDS
M	STANDARDS COMMITTEE APPROVAL							PAD FOR SINGLE PHASE TRANSFORMER
M	LOWERED GROUND ROD IN BOX							
L	CHANGED SERVICE BOX UNDER PAD	BB				BLL	5-99	
K	ADDED SERVICE BOX UNDER PAD	BB	JD			BLL	6-98	
J	CHANGED GROUNDING CONFIGURATION	BB	ETE	RWB	LBG	RA	6-94	SHEET 1 OF 2 — 35051 M — DWG. NO. — FILE #: 00055 — PAGE
REV	DESCRIPTION	INIT	CHK	RV'D	RV'D	APP	DATE	

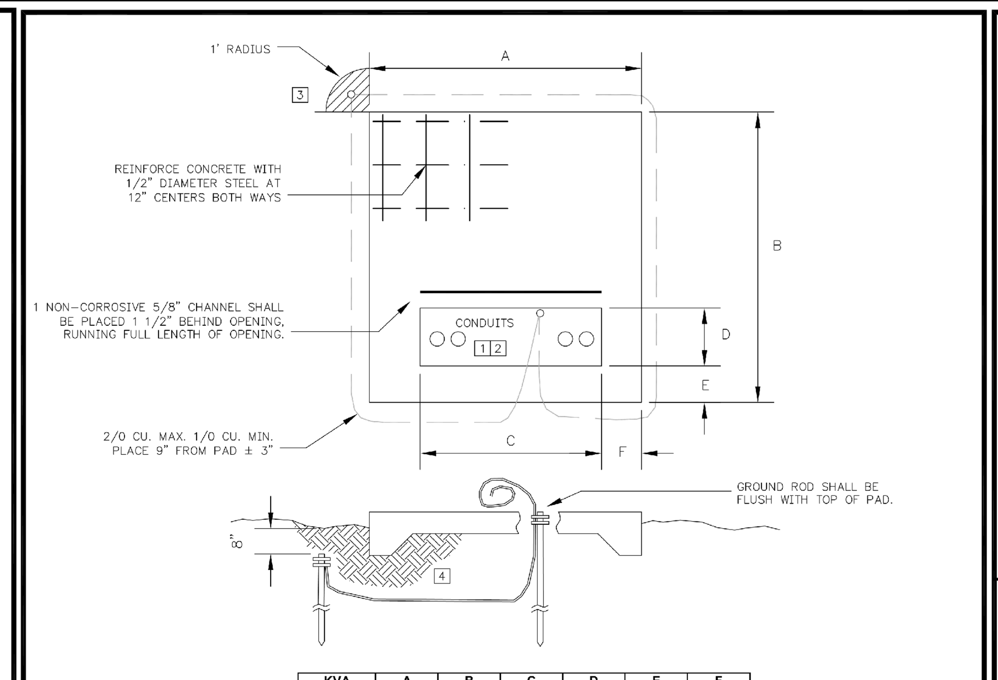

KVA	A	B	C	D	E	F
75 - 500	75"	80"	50"	16"	10"	11"
750-2500	105"	112"	58" [5]	16"	10"	11"

NOTES:

1. SEE CONSTRUCTION STANDARD 35201 FOR SIZE AND QUANTITY OF CONDUIT REQUIRED.
2. PRIMARY CONDUITS LOCATED AT EXTREME LEFT SIDE OF OPENING, SECONDARY CONDUITS LOCATED AT EXTREME RIGHT SIDE OF OPENING.
3. INSTALL ONE (1) 5/8" X 8' COPPER CLAD GROUND ROD IN THE BACK RIGHT HAND SIDE OF THE PAD OPENING, TAKING CARE TO AVOID ALL CONDUITS. A SECOND GROUND ROD SHALL BE INSTALLED IN THE AREA SHOWN. CONNECT THE TWO GROUND RODS TOGETHER USING 1/0 BARE COPPER WIRES LEAVING A MINIMUM 4' COIL ABOVE THE CLAMP. THE GROUND WIRES SHALL BE ROUTED AS SHOWN TO INSURE EQUAL POTENTIAL GROUNDING AROUND THE ENTIRE PAD.
4. THE SOIL UNDER THE PAD SHALL BE COMPACTED TO NO LESS THAN 0.95 RELATIVE COMPACTION.
5. WHEN INSTALLING A 750-2500 KVA TRANSFORMER PAD AND IT IS EXPECTED THAT A 500 KVA TRANSFORMER WILL BE TEMPORARILY INSTALLED, THE DIMENSION "C" SHALL BE 50" INSTEAD OF 58".

	TURLOCK IRRIGATION DISTRICT							CONSTRUCTION STANDARDS
H	STANDARDS COMMITTEE APPROVAL							CONCRETE TRANSFORMER PAD THREE PHASE TRANSFORMER
H	LOWERED GROUND ROD IN PAD							
G	CHANGED GROUNDING CONFIGURATION	BB	ETE	RWB	LBG	RA	6-94	
F	REDRAWN	BB	SCP	RWB	RA	AHK	2-89	SHEET 1 OF 1 — 35101 H — DWG. NO. — FILE #: 00568 — PAGE
REV	DESCRIPTION	INIT	CHK	RV'D	RV'D	APP	DATE	

600 AND 800 AMPS

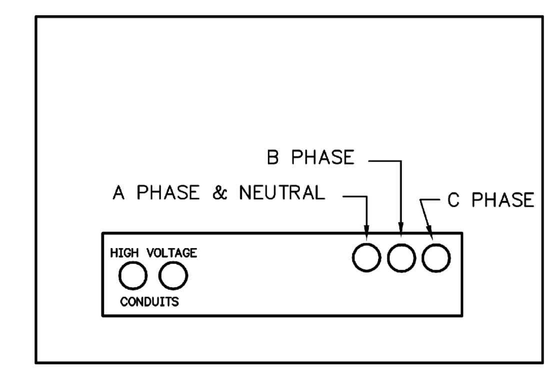

3 - 4" CONDUITS
2 CONDUCTORS PER PHASE
1 NEUTRAL CONDUCTOR

1000,1200,1400 AND 1800 AMP

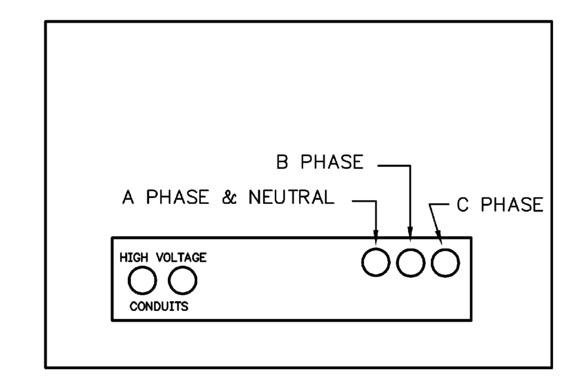

1000, 1200, 1400 AMP
3-4 INCH CONDUITS
3 CONDUCTORS PER PHASE
1 NEUTRAL CONDUCTOR

1800 AMP
3-5 INCH CONDUITS
3 CONDUCTORS PER PHASE
1 NEUTRAL CONDUCTOR

UNDERGROUND COMMERCIAL SERVICE INSTALLATION GUIDELINES	CONSTRUCTION STANDARDS
	SHEET 2 OF 5 — 34750 B — DWG. NO. — FILE #: — PAGE

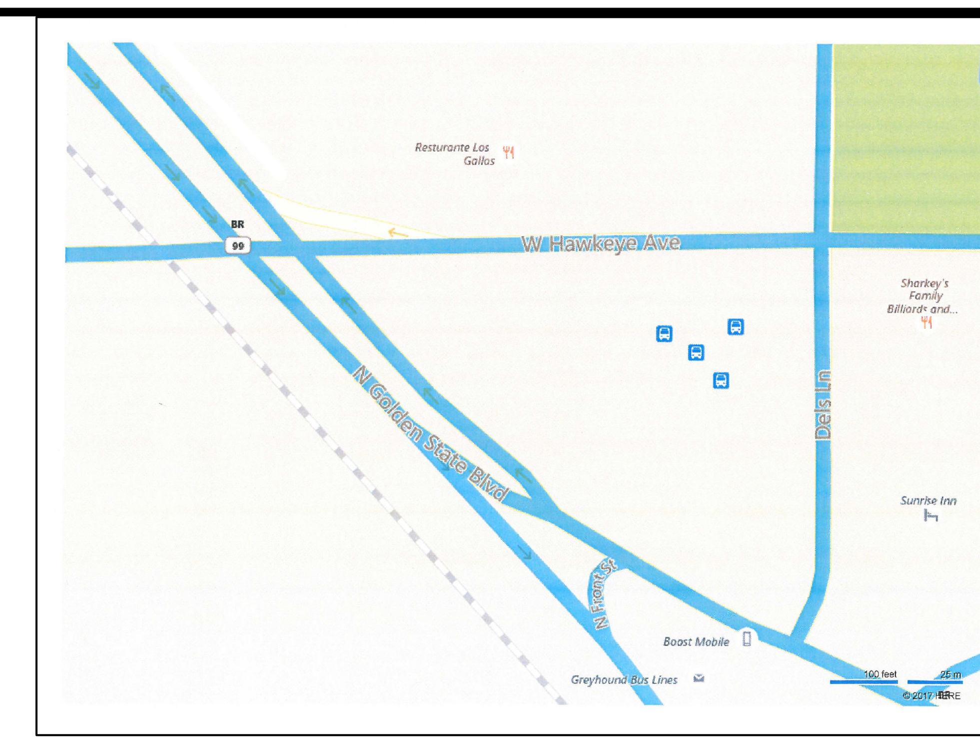

LOCATION MAP

NOTES - COMMERCIAL

DEVELOPER

1. DEVELOPER TO PROCURE AND INSTALL ALL TRANSFORMER PADS AND/OR VAULTS, CONDUITS, PULL LINES, SECONDARY BOXES, PULL BOXES, UG POWER MARKERS, SUBSTRUCTURES, SERVICE WIRE (DEVELOPER NOTE 3), TRANSFORMER BARRIERS, TRANSFORMER GROUND RODS AND GROUND WIRE TO TID ELECTRICAL SPECIFICATIONS.

2. SERVICE WIRE OR RUN IS DEFINED AS CONTINUOUS CONDUCTORS BETWEEN CUSTOMER PANEL AND CONNECTION WITH TID SYSTEM.

3. SERVICE WIRE TO BE: **(3) 500MCM AL XLP PER PH, (1) 500MCM AL XLP N**
IN: **(3) 4" CONDUITS**
OR AS REQUIRED AT THE TIME OF CONSTRUCTION PER TID STANDARDS.

4. CLEARANCE OF TRANSFORMERS TO MAIN DOORS, FIRE ESCAPES, GLASS WALLS, WINDOWS, AIR INTAKES, EXHAUSTS, OR OTHER STRUCTURES SHALL BE IN ACCORDANCE WITH THE UNIFORM BUILDING CODE AND ALL OTHER APPLICABLE ORDINANCES AND REGULATIONS. CONSULT TID ELECTRICAL ENGINEERING FOR DETAILS.

5. DEVELOPER TO PAY TID FOR: **1**
SERVICE RUNS.

6. PRIMARY AND SECONDARY BOX LIDS SHALL BE PERMANENTLY MARKED "T.I.D." OR "ELECTRIC". PRIMARY PULL BOX LIDS MUST ALSO BE MARKED "HIGH VOLTAGE".

7. REFER TO TID DEVELOPER INFORMATION BOOKLET FOR TID MATERIAL SPECIFICATIONS AND CONSTRUCTION STANDARDS. BOOKLET CAN BE OBTAINED AT TID ELECTRICAL ENGINEERING OFFICE AT:
333 E CANAL DRIVE, TURLOCK.

8. DEVELOPER TO CONTACT UNDERGROUND SERVICE ALERT (USA) AT 1-800-642-2422 PRIOR TO ANY EXCAVATION.

9. DEVELOPER MUST CONTACT TID CONSTRUCTION DEPARTMENT AT 209-606-0136 PRIOR TO ANY EXCAVATIONS NEAR TID ENERGIZED EQUIPMENT.

TURLOCK IRRIGATION DISTRICT

1. TID TO SUPPLY AND INSTALL PRIMARY WIRE.
PRIMARY WIRE TO BE: **(3) 1/0 AL**
IN: **(1) 4" CONDUIT BY CUSTOMER**

2. TID TO INSTALL: **(1) PADMOUNT TRANSFORMER**
120/208V, 225 kVA
3-PHASE
4-WIRE

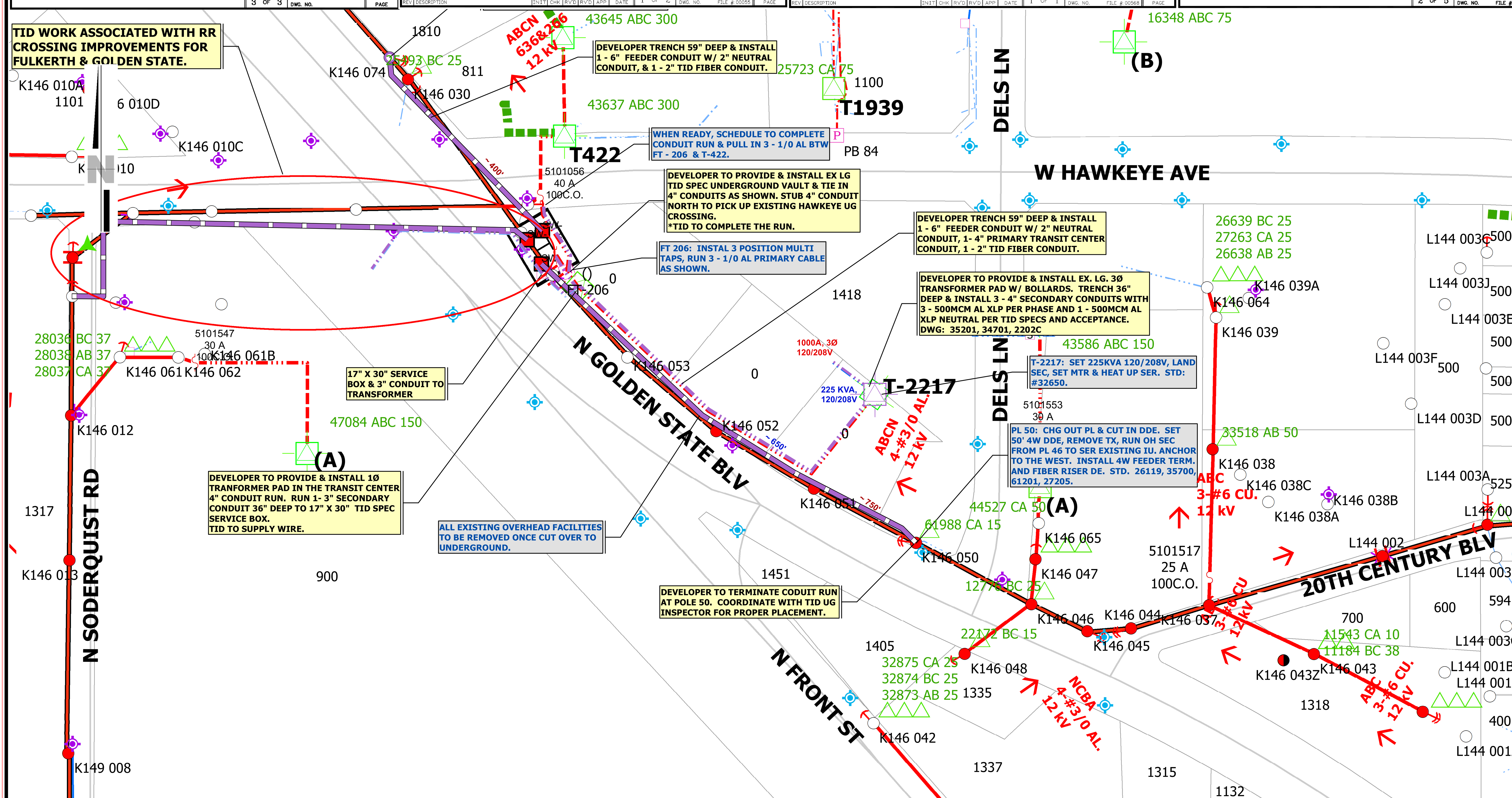

LEGEND

- TRANSFORMER, PAD-MOUNT 3-ph, VOLTAGE AS NOTED
- TRANSFORMER, PAD-MOUNT 1-ph, 120/240 V
- TRANSFORMER, SUBSURFACE 1-ph 120/240 V
- SWITCH, PAD-MOUNT 25 kV, CONFIGURATION AS SHOWN
- PULL BOX, SIZE AS NOTED
- SERVICE BOX X-LARGE 24" x 36"; TID STOCK # U-1376-001
- SERVICE BOX LARGE 17" x 30"; TID STOCK # U-1366-002
- POLE, WOOD SOLE USE
- POLE, WOOD JOINT USE
- CONDUIT STUB, SIZE AS NOTED
- UNDERGROUND POWER MARKER, TID STOCK # U-6440-001
- LINE FUSE
- PRIMARY WIRE, SIZE PER ABOVE
- SECONDARY WIRE, SIZE AS NOTED

REV	DATE	DESCRIPTION	DR	CHK	APP	REV	DATE	DESCRIPTION	DR	CHK	APP
X	X	X	X	X	X	X	X	X	X	X	X

DRAWN	DATE	REVIEWED	DATE
D. PORATH	3/10/17	X	X
CHECKED X	X	REVIEWED X	X
REVIEWED X	X	APPROVED X	X

WATER & POWER

ELECTRICAL ENGINEERING AND OPERATIONS

TRANSIT CENTER FC, PHASE 2

1418 N. GOLDEN STATE BLVD.
TURLOCK, CA
WO #700137 JOB #17005182

MDB&M			
S: X	SCALE: NONE		
T: X	SHEET: 1 OF: 1		
R: X	REV DATE: X		
DWG #: 1		REV X	