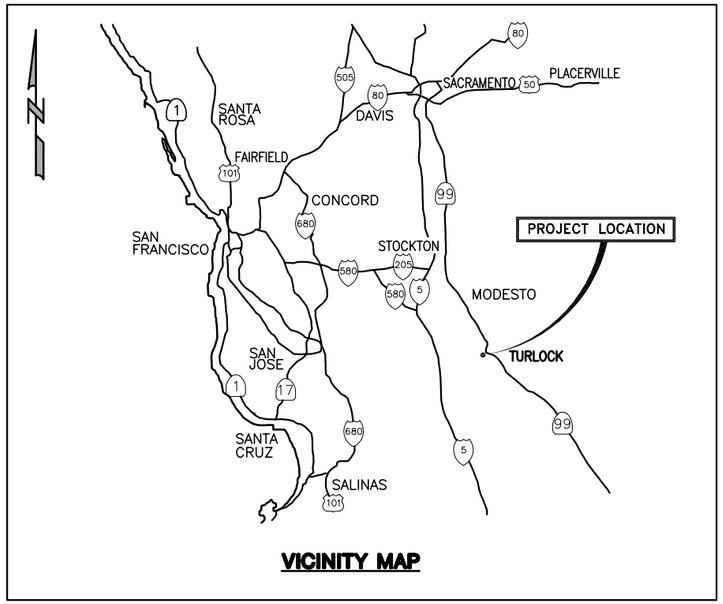

VICINITY MAP

CITY OF TURLOCK INC. 1908

STANISLAUS COUNTY
CALIFORNIA

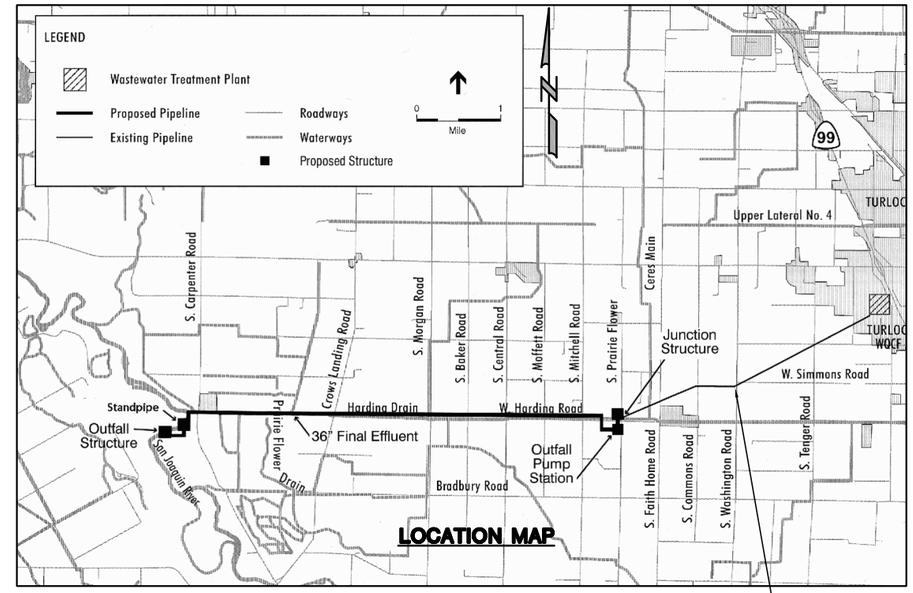

LOCATION MAP

TWIN 36" GRAVITY PIPELINES AND ONE 24" GRAVITY PIPELINE FROM WATER QUALITY CONTROL FACILITY

CONTRACT DOCUMENTS FOR THE CONSTRUCTION OF

HARDING DRAIN BYPASS PUMP STATION AND PIPELINE PROJECT

CITY PROJECT NO. 6859
VOLUME 1 OF 4 - DRAWINGS

MAY 2012

Approved by: _____
City of Turlock, California

Approved by: _____
Stanislaus County
Department of Public Works

carollo®

RECORD DRAWINGS
THESE RECORD DRAWINGS HAVE BEEN PREPARED BASED IN PART ON INFORMATION PROVIDED BY OTHERS

THIS DRAWING SET WAS PREPARED ONLY FOR THE PROJECT AND SITE SPECIFICALLY IDENTIFIED HEREON AND IS NOT TO BE USED ELSEWHERE

Date AUGUST 22, 2014

By RYAN SELLMAN

RECORD DRAWINGS

JOB NO. 6918B.10
DRAWING NO. G-1
SHEET NO. 1 OF 107

C:\pw_working\projectwise\aldico\dms60457\G-000001 8-22-14 02:34pm AJdico ..\dms60443\LOC-MAP1.TIF;..\dms60443\Turlock_City_Logo.tif

GENERAL NOTES

1. GENERAL NOTES APPLY TO ALL DRAWINGS.
2. THE INDICATED LOCATIONS OF EXISTING UNDERGROUND FACILITIES ARE APPROXIMATE ONLY. CONTRACTOR SHALL FIELD VERIFY ALL EXISTING UTILITIES BY POTHOLING PRIOR TO COMMENCING WORK AND SHALL IMMEDIATELY NOTIFY THE ENGINEER OF ANY DISCREPANCIES WITH THE CONTRACT DOCUMENTS. THE CONTRACTOR SHALL NOTIFY UNDERGROUND SERVICE ALERT (USA) AT LEAST 48 HOURS IN ADVANCE OF ANY EXCAVATION. (1-800-277-2600).
3. THE GEOTECHNICAL INVESTIGATION FOUND SAND, GRADES DENSE TO VERIFY DENSE, THROUGHOUT THE LIMITS OF THE PROJECT. THIS MATERIAL MAY REQUIRE SPECIALTY EQUIPMENT TO EXCAVATE. FOR EXAMPLE, THE LOG OF BORING NO. B1 SHOWS A BLOW COUNT OF 65 WITH REFUSAL AT 10" AT APPROXIMATE DEPTH OF 10.5 FEET. SIMILAR BLOW COUNTS ARE FOUND THROUGHOUT THE LIMITS OF THE PROJECT. REFER TO THE GEOTECHNICAL STUDY BY FUGRO WEST INC., DATED AUGUST 2008 FOR ADDITIONAL INFORMATION. THE CONTRACTOR SHALL REVIEW THE GEOTECHNICAL REPORT AND FIELD CONDITIONS AND INCLUDE NECESSARY ALLOWANCE IN THE BID FOR EXCAVATING THIS MATERIAL.
4. THE CONTRACTOR SHALL PROVIDE EITHER STEEL (AWWA C200) PER SPECIFICATION SECTION 15252C OR DUCTILE IRON PIPE (AWWA C151) PER SPECIFICATION SECTION 15251, FOR THE 36" FE SHOWN ON DRAWINGS P-1 THROUGH P-23 (STATION 10+50.06 THROUGH 305+00). THE CONTRACTOR SHALL PROVIDE THE FULL PIPE LENGTH (STATION 10+50.06 THROUGH 305+00) AS A UNIFORM PIPE MATERIAL.
5. SUBMIT LAY DRAWINGS OF THE PIPELINE ALIGNMENT TO THE ENGINEER PRIOR TO COMMENCING WORK.
6. THE CONTRACTOR SHALL PROVIDE ALL ADDITIONAL PIPING, FITTINGS, APPURTENANCES, TRENCHING, EARTHWORK, AND MATERIALS ETC. (AT NO ADDITIONAL COST TO THE OWNER). IF THE PIPELINE IS INSTALLED IN A DIFFERENT ALIGNMENT THAN SHOWN ON THE DRAWINGS.
7. UNLESS DETAILED, SPECIFIED, OR OTHERWISE INDICATED ON THE DRAWINGS, CONSTRUCTION SHALL BE PER THE APPLICABLE TYPICAL DETAILS AND GENERAL NOTES. TYPICAL DETAILS SHALL APPLY WHETHER OR NOT SPECIFICALLY REFERENCED IN THE DRAWINGS.
8. CONTRACTOR SHALL RESTRAIN ALL PIPELINE DEFLECTIONS GREATER THAN 5 DEGREES PER DETAIL 'A' ON DRAWING P-25.
9. CONTOUR INTERVAL IS ONE FOOT.
10. IT IS THE RESPONSIBILITY OF THE CONTRACTOR TO DETERMINE QUANTITIES OF IMPORT MATERIAL NEEDED.
11. ALL EXISTING GROUND ELEVATIONS ARE APPROXIMATE ONLY AND MUST BE FIELD VERIFIED BY THE CONTRACTOR.
12. ALL WORK BY CONTRACTOR SHALL BE RESTRICTED TO DESIGNATED LANDS OWNED BY THE CITY FOR CONSTRUCTION OF THIS PROJECT. STANISLAUS COUNTY RIGHT-OF-WAY PER THE ENCROACHMENT PERMIT, AND IDENTIFIED EASEMENTS OBTAINED FOR THE PURPOSE OF THIS PROJECT.
13. CONTRACTOR SHALL NOT SIDE CAST EXCAVATED MATERIAL INTO THE TURLOCK IRRIGATION DISTRICT'S (TID) HARDING DRAIN.
14. SIDE CASTING OF EXCAVATED TRENCH MATERIAL SHALL BE KEPT WITHIN COUNTY RIGHT-OF-WAY. PLACEMENT AND RETRIEVAL OF SUCH MATERIAL SHALL NOT INFRINGE UPON ADJACENT LANDOWNERS CROPS. NOTE THAT SEGMENTS FOR THE ALIGNMENT ARE RESTRICTED BY THE TOPOGRAPHY, EXISTING FACILITIES, AND OTHER RESTRAINTS. CONTRACTOR SHALL APPLY METHODS OF CONSTRUCTION THAT OPERATE WITHIN THESE CONSTRAINTS.
15. IF ANY EXISTING FENCING IS REQUIRED TO BE REMOVED FOR CONSTRUCTION, THE CONTRACTOR SHALL REPLACE THE FENCING WITH EQUAL OR HIGHER QUALITY FENCING. SUBMIT THE PROPOSED FENCING TO THE ENGINEER FOR APPROVAL PRIOR TO INSTALLATION AND FABRICATION.
16. THE CONTRACTOR SHALL REPLACE SIGNS AND POSTS REMOVED OR DISTURBED DURING CONSTRUCTION TO THEIR ORIGINAL LOCATIONS AND CONDITION.
17. CEMENT MORTAR LINED AND COATED STEEL PIPE, AND DUCTILE IRON PIPE SHALL INCLUDE JOINT BONDING AND TEST STATIONS AS SHOWN IN THE DRAWINGS.
18. ALL BURIED DUCTILE IRON PIPE SHALL BE WRAPPED IN TWO LAYERS OF LOOSE POLYETHYLENE WRAP PER SPECIFICATION 15251 AND 15052.
19. ALL WORK SHALL BE PERFORMED IN ACCORDANCE WITH THE REQUIREMENTS OF ALL FEDERAL, STATE, AND LOCAL CODES AND APPLICABLE PERMITS.
20. THE 36" FE PIPELINE CROSSES IRRIGATION DRAINAGE AND DELIVERY PIPES. THESE PIPES ARE UNREINFORCED CONCRETE PIPE. IRRIGATION PRACTICES TAKE PRECEDENCE OVER CONTRACTOR ACTIVITIES. CONTRACTOR SHALL COORDINATE ACTIVITIES WITH THE TURLOCK IRRIGATION DISTRICT (TID).
21. AS SHOWN IN THE DRAWINGS, POWER AND TELEPHONE UTILITIES ARE LOCATED NEAR THE 36" FE PIPELINE ALIGNMENT. THE CONTRACTOR SHALL CONTACT THE OWNER OF EACH UTILITY AND DETERMINE ANY SPECIAL REQUIREMENTS FOR WORKING NEAR THE UTILITY. THE CONTRACTOR SHALL MEET ALL REQUIREMENTS OF EACH UTILITY OWNER.
22. CONTRACTOR SHALL REPLACE ALL EXISTING FENCING DURING CONSTRUCTION WITH FENCING OF EQUAL OR HIGHER QUALITY. SUBMIT ALL REPLACEMENT FENCING TO THE ENGINEER FOR REVIEW.
23. SEE STANISLAUS COUNTY, DEPARTMENT OF PUBLIC WORKS, STANDARDS AND SPECIFICATIONS 2007 EDITION FOR ALL REQUIREMENTS FOR WORKING IN THE STANISLAUS COUNTY PUBLIC RIGHT-OF-WAY. SUBMIT A TRAFFIC CONTROL PLAN CONFORMING TO ALL STANISLAUS COUNTY REQUIREMENTS FOR THE ENGINEER'S REVIEW FOR EACH COUNTY ROAD CROSSING (S. CARPENTER, CROW LANDING ROAD, MORGAN ROAD, BLAKER ROAD, CENTRAL AVENUE, MOFFETT ROAD, MITCHELL ROAD AND PRAIRIE FLOWER ROAD).
24. CONTRACTOR SHALL SUPPLY ALL EQUIPMENT, LABOR, AND MATERIALS NECESSARY TO PERFORM THE WORK SHOWN ON THESE PLANS AND SPECIFICATIONS.
25. ALL WORKMANSHIP AND MATERIALS FURNISHED BY CONTRACTOR SHALL BE OF THE KIND AND QUALITY DESCRIBED IN THE SPECIFICATIONS OR ON THE PLANS AND SHALL BE FIRST CLASS THROUGHOUT. NEITHER FINAL ACCEPTANCE NOR FINAL PAYMENT BY CITY SHALL RELIEVE CONTRACTOR OF RESPONSIBILITY FOR FAULTY MATERIALS OR WORKMANSHIP.
26. IN THE EVENT OF ANY CONFLICT OF INFORMATION SHOWN IN THESE PLANS, OR ANY CONFLICT BETWEEN THESE PLANS AND THE INTENT OF CONSISTENT AND FUNCTIONAL FACILITIES, OR SHOULD THERE BE ANY AMBIGUITIES, THE CONTRACTOR SHALL SO NOTIFY THE ENGINEER IN WRITING, UPON WHICH NOTICE, THE ENGINEER SHALL RESOLVE THE CONFLICT OR CLARIFY THE AMBIGUITY BY THE ISSUANCE OF A WRITTEN ORDER, REVISED PLANS OR BOTH. THE CONTRACTOR SHALL BEAR FULL COST AND RESPONSIBILITY FOR WORK AFFECTED BY SUCH CONFLICTS AND AMBIGUITIES PERFORMED BY THE CONTRACTOR PRIOR TO SUCH NOTICE TO THE ENGINEER AND ISSUANCE OF SUCH ORDER AND/OR REVISED PLANS.
27. CONTRACTOR SHALL PROVIDE ADEQUATE DUST CONTROL AT ALL TIMES AS REQUIRED BY CITY REPRESENTATIVE AND THE SJVAD. THE CONTRACTOR SHALL BE RESPONSIBLE FOR COSTS DUE TO AIR VIOLATIONS. CONTRACTOR SHALL PROVIDE NOISE CONTROL AT ALL TIMES.
28. CONTRACTOR SHALL EXERCISE ALL NECESSARY CAUTION TO AVOID DAMAGE TO ANY EXISTING FEATURES. INCLUDING BUT NOT LIMITED TO, SURVEY MONUMENTS, TREES, HOUSE, LANDSCAPING, LANDSCAPE IRRIGATION SYSTEM, FENCES, BOLLARDS, OR SURFACE IMPROVEMENTS, OR TO ANY EXISTING DRAINAGE STRUCTURES, WATER STRUCTURES, OR JUNCTION BOXES FOR UNDERGROUND ELECTRIC, TELEPHONE, OR CABLE TV, OR STORM SEWER, SANITARY SEWER, WATER LINE, AND UNDERGROUND UTILITIES, WHICH ARE TO REMAIN IN PLACE, AT NO ADDITIONAL COST TO THE CITY.
29. EXISTING UTILITY LINES THAT ARE KNOWN TO THE ENGINEER ARE SHOWN FOR INFORMATION ONLY. SERVICE CONNECTIONS (SEWER, ELECTRICAL, GAS, TELEPHONE, TELEVISION, STORM DRAIN) TO HOUSES AND BUSINESSES ARE APPROXIMATED. WATER SERVICES HAVE BEEN SHOWN IN APPROXIMATE LOCATIONS ONLY. CONTRACTOR SHALL CONDUCT NECESSARY POTHOLE OPERATION TO IDENTIFY UNDERGROUND UTILITIES IN ADVANCE OF TRENCHING, SHALL BE RESPONSIBLE FOR THE VERIFICATION OF ALL EXISTING UTILITIES IN THE FIELD, SHALL EXERCISE ALL NECESSARY CAUTION TO AVOID DAMAGE TO ANY EXISTING UTILITY LINE OR FACILITIES TO REMAIN IN PLACE, WHETHER OR NOT SUCH LINES OR FACILITIES ARE SHOWN ON THESE PLANS, AT NOT ADDITIONAL COST TO THE CITY. NO WARRANTY IS GIVEN AS TO THE ACCURACY OF EXISTING INFORMATION.
30. THE ENGINEER WILL OBSERVE ALL WORK FOR CONFORMANCE TO THE PLANS AND SPECIFICATIONS. CONTRACTOR SHALL NOTIFY THE ENGINEER 48 HOURS PRIOR TO GRADING CONSTRUCTION AND TESTING OF UNDERGROUND UTILITIES.
31. DETAILED PROCEDURES, SEQUENCE, BYPASS PLAN, INSPECTION/ACCEPTANCE SCHEDULE, AND OVERALL WORK PLAN SHALL BE PREPARED AND SUBMITTED BY CONTRACTOR AND REVIEWED BY THE ENGINEER FOR APPROVAL.
32. ANY DAMAGE OR FINES LEVIED ON THE CITY RESULTING FROM CONSTRUCTION RELATED WATER OVERFLOW AND SPILLAGE SHALL BE BORNE BY THE CONTRACTOR.
33. CONTRACTOR SHALL RESTORE OR REPLACE ANY DAMAGED SURVEY MONUMENTS RESULTING FROM HIS OPERATION AND SHALL BEAR ALL COSTS OF SUCH REPLACEMENT, INCLUDING COST OF FILING A RECORD OF SURVEY WITH STANISLAUS COUNTY. REPLACEMENT SHALL BE COMPLETED BY A LAND SURVEYOR REGISTERED BY THE STATE OF CALIFORNIA.
34. ALL CONFINED SPACE MAN-ENTRY TO EXISTING MANHOLES SHALL BE PERFORMED IN COMPLIANCE WITH OSHA AND NEC SPECIFICATIONS.
35. EXCAVATIONS SHALL BE ADEQUATELY SHORED, BRACED AND SHEETED SO THAT THE EARTH WILL NOT SLIDE OR SETTLE AND SO THAT ALL EXISTING IMPROVEMENTS OF ANY KIND WILL BE FULLY PROTECTED FROM DAMAGE. ANY DAMAGE RESULTING FROM A LACK OF ADEQUATE SHORING, BRACING AND SHEETING SHALL BE THE RESPONSIBILITY OF THE CONTRACTOR AND HE SHALL AFFECT NECESSARY REPAIRS OR RECONSTRUCTION AT HIS OWN EXPENSE. THE CONTRACTOR SHALL PROVIDE ADEQUATE SHEETING, SHORING AND BRACING OR EQUIVALENT METHOD FOR THE PROTECTION OF LIFE, OR LIMB, WHICH SHALL CONFORM TO THE APPLICABLE CONSTRUCTION SAFETY ORDERS OF THE DIVISION OF INDUSTRIAL SAFETY OF THE STATE OF CALIFORNIA. THE CONTRACTOR SHALL ALWAYS COMPLY WITH ALL OSHA REQUIREMENTS.
36. THE CONTRACTOR SHALL PROVIDE ALL LIGHTS, SIGNS, BARRICADES, FLAG PERSON OR OTHER DEVICES NECESSARY TO PROVIDE SAFETY DURING CONSTRUCTION.
37. THE CONTRACTOR SHALL NOT USE OR INSTALL ANY MATERIAL OR EQUIPMENT, WHICH IS MADE FROM, OR CONTAINS ASBESTOS IN THE CONSTRUCTION OF THESE IMPROVEMENTS. ANY PARTY INSTALLING OR USING SUCH MATERIALS OR EQUIPMENT SHALL BE SOLELY RESPONSIBLE FOR ALL INJURIES, DAMAGES, OR LIABILITIES OF ANY KNID, CAUSED BY THE USE OF SUCH MATERIALS OR EQUIPMENT, AND THE COST OF REPLACEMENT.
38. THE AREA OF CONSTRUCTION HAS BEEN IDENTIFIED AS A POTENTIAL BREEDING GROUND AND OR HABITAT ENDANGERED SPECIES. ALL MITIGATION MEASURES IDENTIFIED IN THE SPECIFICATIONS, APPENDIX 'A', AND OR PERMIT REQUIREMENTS SHALL BE IMPLEMENTED PRIOR TO CONSTRUCTION AND MAINTAINED THROUGHOUT CONSTRUCTION UNTIL THE PROJECT WORK HAD BEEN FULLY ACCEPTED.
39. THE CONTRACTOR IS RESPONSIBLE FOR MATCHING EXISTING LANDSCAPE AND DRIVEWAYS WITH A SMOOTH TRANSITION. LOW SPOTS CREATED FROM CONSTRUCTION MUST BE GRADED TO DRAIN TO EXISTING DRAINAGE AREA.
40. FULL COMPENSATION FOR COMPLYING WITH THESE NOTES AND OTHER NOTES ON THE PLANS SHALL BE CONSIDERED AS INCLUDED IN THE PRICE PAID FOR VARIOUS CONTRACT ITEMS OR WORK AND NO ADDITIONAL ALLOWANCE WILL BE MADE THEREFORE.
41. ALL PIPE TRENCH WORK SHALL BE PERFORMED PER P002 TYP UNLESS CALLED OUT AS P003 TYP .
42. CONTRACTOR SHALL REPAIR THE HARDING DRAIN LEVEE ROAD TO EXISTING CONDITION PER SPEC 02300.
43. DEWATERING MAY BE REQUIRED FOR ALL EXCAVATIONS. REFER TO THE GEOTECHNICAL REPORT AND SPECIFICATION 02318 FOR ALL REQUIREMENTS.
44. REPAIR EXISTING ROAD FROM STA 10+00 TO STA 65+00 TO EXISTING CONDITIONS AFTER CONSTRUCTION.

INDEX OF DRAWINGS

SHEET NUMBER	DRAWING NUMBER	DESCRIPTION
GENERAL		
1	G-1	COVER SHEET
2	G-2	DRAWING LIST INDEX AND GENERAL NOTES
3	G-3	DRAWING KEY PLAN
4	G-4	HYDRAULIC PROFILE AND DESIGN CRITERIA
TYPICAL DETAILS		
5	T-1	TYPICAL DETAILS - GENERAL
6	T-2	TYPICAL DETAILS - GENERAL
7	T-3	TYPICAL DETAILS - ARCHITECTURAL
8	T-4	TYPICAL DETAILS - ARCHITECTURAL
9	T-5	TYPICAL DETAILS - ARCHITECTURAL
10	T-6	TYPICAL DETAILS - ARCHITECTURAL
11	T-7	TYPICAL DETAILS - CIVIL
11A	T-7A	TYPICAL DETAILS - CIVIL II
12	T-8	TYPICAL DETAILS - HVAC/MECHANICAL
12A	T-8A	TYPICAL DETAILS - CIVIL/MECHANICAL/PIPING
13	T-9	TYPICAL DETAILS - MECHANICAL/PIPING
14	T-10	TYPICAL DETAILS - PIPING
15	T-11	TYPICAL DETAILS - PIPING
16	T-12	TYPICAL DETAILS - PIPING
17	T-13	TYPICAL DETAILS - PIPING
18	T-14	TYPICAL DETAILS - PIPING
19	T-15	TYPICAL DETAILS - STRUCTURAL
20	T-16	TYPICAL DETAILS - STRUCTURAL
21	T-17	TYPICAL DETAILS - STRUCTURAL/CORROSION
22	T-18	TYPICAL DETAILS - PIPELINE CORROSION MONITOR
23	T-19	TYPICAL DETAILS - PIPELINE CORROSION MONITOR
OUTFALL PIPELINE		
24	P-1	PLAN & PROFILE STA 10+00 TO STA 23+00
25	P-2	PLAN & PROFILE STA 23+00 TO STA 36+00
26	P-3	PLAN & PROFILE STA 36+00 TO STA 49+00
27	P-4	PLAN & PROFILE STA 49+00 TO STA 62+00
28	P-5	PLAN & PROFILE STA 62+00 TO STA 75+00
29	P-6	PLAN & PROFILE STA 75+00 TO STA 88+00
30	P-7	PLAN & PROFILE STA 88+00 TO STA 101+50
31	P-8	PLAN & PROFILE STA 101+50 TO STA 114+00
32	P-9	PLAN & PROFILE STA 114+00 TO STA 127+00
33	P-10	PLAN & PROFILE STA 127+00 TO STA 140+00
34	P-11	PLAN & PROFILE STA 140+00 TO STA 153+00
35	P-12	PLAN & PROFILE STA 153+00 TO STA 166+00
36	P-13	PLAN & PROFILE STA 166+00 TO STA 179+00
37	P-14	PLAN & PROFILE STA 179+00 TO STA 192+00
38	P-15	PLAN & PROFILE STA 192+00 TO STA 205+00
39	P-16	PLAN & PROFILE STA 205+00 TO STA 218+00
40	P-17	PLAN & PROFILE STA 218+00 TO STA 231+00
41	P-18	PLAN & PROFILE STA 231+00 TO STA 244+00
42	P-19	PLAN & PROFILE STA 244+00 TO STA 257+00
43	P-20	PLAN & PROFILE STA 257+00 TO STA 270+00
44	P-21	PLAN & PROFILE STA 270+00 TO STA 283+00
45	P-22	PLAN & PROFILE STA 283+00 TO STA 296+00
46	P-23	PLAN & PROFILE STA 296+00 TO STA 305+00
47	P-24	OUTFALL PIPING - LEVEE CROSS SECTIONS
48	P-25	MISCELLANEOUS DETAILS
OUTFALL PUMP STATION		
49	PSC-1	OUTFALL PUMP STATION - SITE PLAN PAVING AND GRADING
50	PSY-1	OUTFALL PUMP STATION/JUNCTION STRUCTURE - PIPING PLAN AND PROFILE
51	PSY-2	OUTFALL PUMP STATION/JUNCTION STRUCTURE - PLAN AND SECTION
52	PSA-1	OUTFALL PUMP STATION - PLANS, ELEVATIONS AND SCHEDULES
53	PSS-1	OUTFALL PUMP STATION - PLANS
54	PSS-2	OUTFALL PUMP STATION - TOP PLAN
55	PSS-3	OUTFALL PUMP STATION - SECTIONS
56	PSS-4	OUTFALL PUMP STATION - SECTIONS
57	PSS-5	OUTFALL PUMP STATION - SECTIONS
58	PSS-6	OUTFALL PUMP STATION - SECTIONS
59	PSS-7	OUTFALL PUMP STATION - SECTIONS AND DETAILS
60	PSS-8	OUTFALL PUMP STATION - SECTIONS AND DETAILS
61	PSM-1	OUTFALL PUMP STATION - PLAN AND DETAIL
61A	PSM-1A	OUTFALL PUMP STATION - PLAN AND DETAIL - A
62	PSM-2	OUTFALL PUMP STATION - SECTION
63	PSM-3	OUTFALL PUMP STATION - SECTION
64	PSM-4	OUTFALL PUMP STATION - HVAC PLAN AND SECTIONS
65	PSJ-1	JUNCTION STRUCTURE - PLANS
66	PSJ-2	JUNCTION STRUCTURE - SECTIONS AND DETAILS
67	PSJ-3	JUNCTION STRUCTURE - PROPOSED CONSTRUCTION SEQUENCE
RIVER DISCHARGE FACILITIES		
68	SP-1	STANDPIPE STRUCTURE - SITE PLAN AND SECTION
69	SP-2	STANDPIPE STRUCTURE - PLANS, SECTION AND ELEVATIONS
70	SP-3	STANDPIPE STRUCTURE - PLAN AND SECTIONS
71	RDY-1	OUTFALL GRAVITY PIPELINE - SITE PLAN
71A	RDY-1A	HYRDOSEEDING PLAN AT OUTFALL AND STANDPIPE
72	RDY-2	OUTFALL GRAVITY PIPELINE - PROFILE
73	RDY-3	OUTFALL GRAVITY PIPELINE - PARTIAL PLAN AND SECTIONS
74	RDY-4	OUTFALL GRAVITY PIPELINE - SECTIONS
75	RDS-5	OUTFALL STRUCTURE - PLAN AND SECTIONS
76	RDS-6	OUTFALL STRUCTURE - SECTIONS
77	RDS-7	OUTFALL STRUCTURE - SECTIONS AND DETAILS
ELECTRICAL		
78	GE01	GENERAL LEGEND AND ABBREVIATIONS
79	GE02	OUTFALL PUMP STATION - SITE PLAN
80	GE03	OUTFALL STANDPIPE AND OUTFALL STRUCTURE - SITE PLAN
81	GE04	GENERAL DUCT BANK SECTIONS & SCHEDULES
82	GE05	SINGLE LINE DIAGRAM
83	GE06	GENERAL SWITCHGEAR AND VFD ELEVATIONS
84	GE07	CONTROL SCHEMATICS
85	GE08	CONTROL SCHEMATICS
86	GE09	CONTROL SCHEMATICS
87	TE01	TYPICAL DETAILS
88	TE02	TYPICAL DETAILS
89	TE03	TYPICAL DETAILS
90	TE04	TYPICAL DETAILS
91	CSE01	CONDUIT AND CABLE SCHEDULE
92	CSE02	CONDUIT AND CABLE SCHEDULE
93	CSE03	CONDUIT AND CABLE SCHEDULE
94	CSE04	CONDUIT AND CABLE SCHEDULE
95	CSE05	CONDUIT AND CABLE SCHEDULE
96	PSE01	OUTFALL PUMP STATION - HVAC AND LIGHTING PLAN
97	PSE02	OUTFALL PUMP STATION - POWER PLAN
98	PSE03	ELECTRICAL ROOM POWER, GROUNDING & SIGNAL PLAN
99	PSE04	ELECTRICAL ROOM LIGHTING PLAN
100	RDE01	STANDPIPE AND CASCADE AERATION STRUCTURE LIGHTING & POWER PLAN AND SECTIONS
INSTRUMENTATION		
101	GN-1	LEGEND AND SYMBOLS
102	GN-2	DETAILS
103	GN-3	CONTROL SCHEMATIC - 1
104	GN-4	CONTROL SCHEMATIC - 2
105	SP-N-1	OUTFALL STANDPIPE P&ID
106	OP-N-1	OUTFALL PUMP STATION - P&ID 1
107	OP-N-2	OUTFALL PUMP STATION - P&ID 2

REV	DATE	BY	DESCRIPTION

RECORD DRAWINGS

DESIGNED BEH
DRAWN PAT/RC
CHECKED WCL
DATE MAY 2012

DISCIPLINE ENGINEER: ** ORIGINAL SEALED BY MICHAEL J. HARTLAUB 12/07/11 C74901 **
PROJECT ENGINEER: ** ORIGINAL SEALED BY DARREN G. BAUNE 12/07/11 C68899 **
VICE PRESIDENT: ** ORIGINAL SEALED BY MICHAEL J. BRITTEN 12/07/11 C27729 **

carollo

CITY OF TURLOCK INC. 1908
STANISLAUS COUNTY, CALIFORNIA

HARDING DRAIN BYPASS
PUMP STATION AND PIPELINE
GENERAL
DRAWING LIST INDEX AND GENERAL NOTES

VERIFY SCALES
BAR IS ONE INCH ON ORIGINAL DRAWING
0 1"
IF NOT ONE INCH ON THIS SHEET, ADJUST SCALES ACCORDINGLY

JOB NO. 6918B.10
DRAWING NO. G-2
SHEET NO. 2 OF 107

Last Saved By: Alaico 5-20-14 01:16pm

FILENAME: C:\pw_working\projectwise\alaico\dms60457\G-00G002 8-25-14 08:20am ALaico XREFS: G-BDR; Mjb; BEH; CA-MJB; CA-DGB; CA-AEB; CA-GRS; CA-KAM; CA-MJH; CA-ALM; CA-ALM_11-30-11; CA-DGB_11-30-11; CA-MJB_11-30-11 Turlck_City_LogoPMS_FNL;

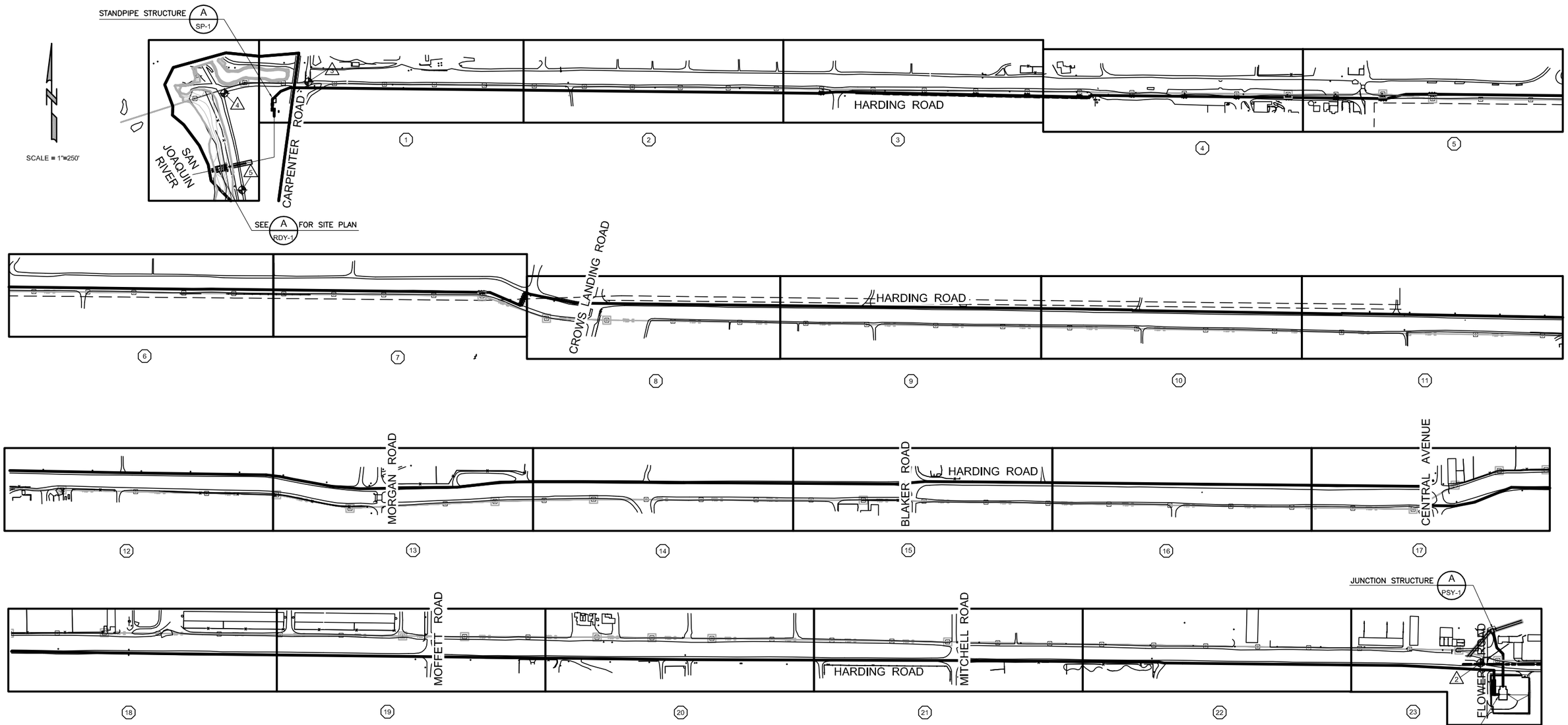

SURVEY GRID MONUMENT DATA					
NO.	PT. NO.	NORTHING	EASTING	ELEV	DESCRIPTION
1	55	1990873.77	6436604.13	75.59	1/2" IRON PIPE
2	3019	1991569.93	6436600.68	78.40	1/2" IRON PIPE
3	4040	1991935.94	6407578.62		2" BRASS DISK
4	50	1991878.59	6407158.28	63.58	1/2" IRON PIPE
5	51	1991395.32	6407247.27	64.11	1/2" IRON PIPE

BASIS OF BEARINGS:
BASE CONTROL POINTS WERE LOCATED BY
GPS SURVEYING AND ARE BASED ON NAD83
REDUCED TO GROUND COORDINATES.

AREA	DRAWING SCHEDULE
AREA PLAN	PLAN AND PROFILE
1	PLAN AND PROFILE STA 10+00 TO STA 23+00
2	PLAN AND PROFILE STA 23+00 TO STA 36+00
3	PLAN AND PROFILE STA 36+00 TO STA 49+00
4	PLAN AND PROFILE STA 49+00 TO STA 62+00
5	PLAN AND PROFILE STA 62+00 TO STA 75+00
6	PLAN AND PROFILE STA 75+00 TO STA 88+00
7	PLAN AND PROFILE STA 88+00 TO STA 101+50
8	PLAN AND PROFILE STA 101+50 TO STA 114+00

AREA	DRAWING SCHEDULE
AREA PLAN	PLAN AND PROFILE
9	PLAN AND PROFILE STA 114+00 TO STA 127+00
10	PLAN AND PROFILE STA 127+00 TO STA 140+00
11	PLAN AND PROFILE STA 140+00 TO STA 153+00
12	PLAN AND PROFILE STA 153+00 TO STA 166+00
13	PLAN AND PROFILE STA 166+00 TO STA 179+00
14	PLAN AND PROFILE STA 179+00 TO STA 192+00
15	PLAN AND PROFILE STA 192+00 TO STA 205+00
16	PLAN AND PROFILE STA 205+00 TO STA 218+00

AREA	DRAWING SCHEDULE
AREA PLAN	PLAN AND PROFILE
17	PLAN AND PROFILE STA 218+00 TO STA 231+00
18	PLAN AND PROFILE STA 231+000 TO STA 244+00
19	PLAN AND PROFILE STA 244+00 TO STA 257+00
20	PLAN AND PROFILE STA 257+00 TO STA 270+00
21	PLAN AND PROFILE STA 270+00 TO STA 283+00
22	PLAN AND PROFILE STA 283+00 TO STA 296+00
23	PLAN AND PROFILE STA 296+00 TO STA 305+00

Last Saved By: Alaico 5-28-14 02:30pm

REV	DATE	BY	DESCRIPTION

RECORD DRAWINGS

DESIGNED DGB
DRAWN AL
CHECKED CFS
DATE MAY 2012

DISCIPLINE ENGINEER: ** ORIGINAL SEALED BY MICHAEL J. HARTLAUB 12/07/11 C74901 **
PROJECT ENGINEER: ** ORIGINAL SEALED BY DARREN G. BAUNE 12/07/11 C68899 **
VICE PRESIDENT: ** ORIGINAL SEALED BY MICHAEL J. BRITTEN 12/07/11 C27729 **

carollo

CITY OF TURLOCK INC. 1908
STANISLAUS COUNTY, CALIFORNIA

HARDING DRAIN BYPASS
PUMP STATION AND PIPELINE
GENERAL
DRAWING KEY PLAN

VERIFY SCALES
BAR IS ONE INCH ON ORIGINAL DRAWING
0 1"
IF NOT ONE INCH ON THIS SHEET, ADJUST SCALES ACCORDINGLY

JOB NO. 6918B.10
DRAWING NO. G-3
SHEET NO. 3 OF 107

FILENAME: C:\pw_working\projectwise\alaico\dms60457\G-00G003 8-25-14 04:38pm ALaico XREFS: G-BDR; Alignment; S-01S101; ADDTOPO-OF; ETOPO; NEWTID; plan; Y-02Y100; S-02S101; JUNCTION_SITE; PS site; Mjb; BEH; S-02Y100; CA-AEB; CA-GRS; CA-KAM; CA-MJH; CA-MJB; CA-DGB; GARY HO SIG; CA-ALM; CA-ALM_11-30-11; CA-DGB_11-30-11; CA-MJB_11-30-11; M-02M202 Turlck_City_LogoPMS_FNL;

LEGEND:

FE FINAL EFFLUENT
TID TURLOCK IRRIGATION DISTRICT
IE INVERT ELEVATION
HWL HIGH WATER LEVEL
LWL LOW WATER LEVEL
EL ELEVATION
WS WATER SURFACE
HGL HYDRAULIC GRADE LINE

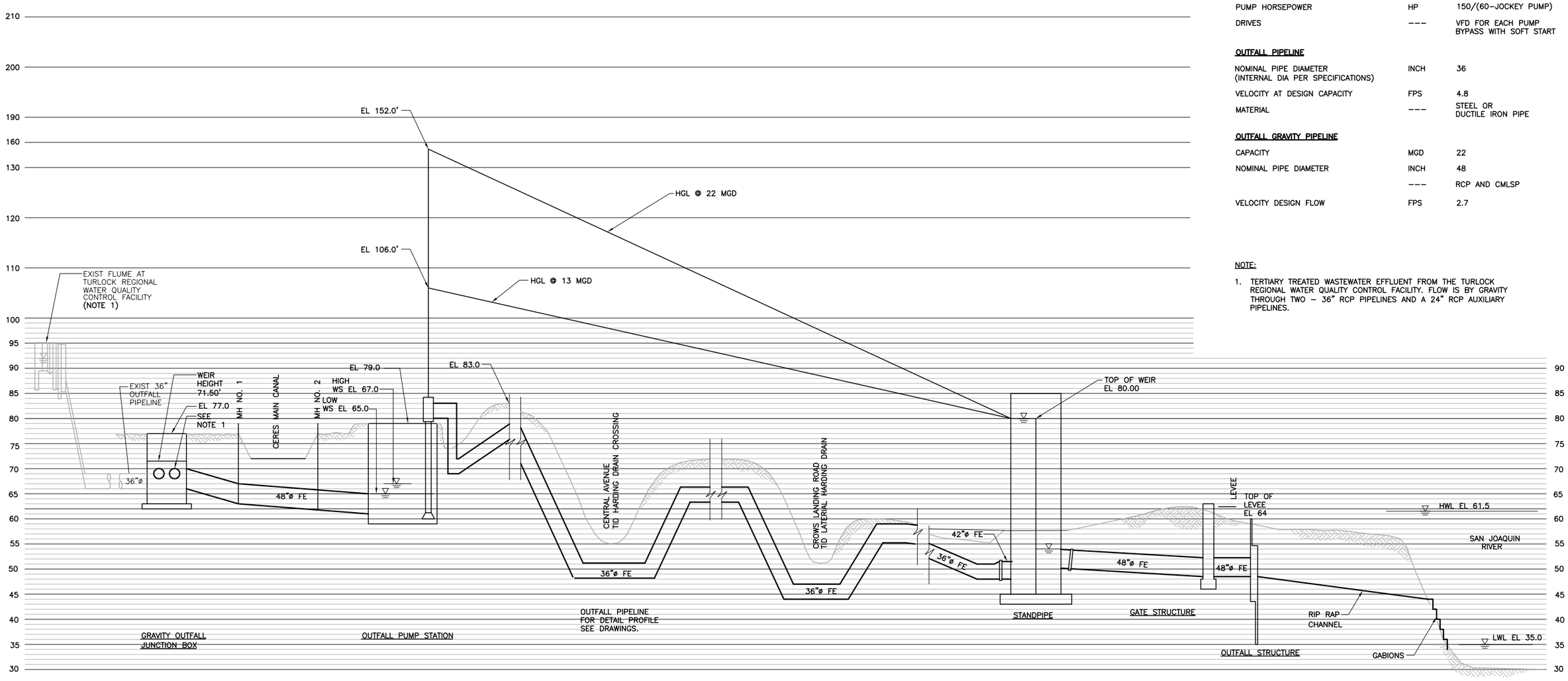

DESIGN CRITERIA

ITEM	UNIT	DESIGN CRITERIA
PUMP STATION GRAVITY PIPELINE		
DESIGN STRUCTURE DESIGN CAPACITY	MGD	22
PUMP STATION		
PEAK PUMPING CAPACITY	MGD	22
NUMBER OF PUMPS (TOTAL)		4
OPERATING PUMPS		3
DESIGN CAPACITY (W/ ALL OPERATING PUMPS ON) PER PUMP	GPM	5,100
PUMP HORSEPOWER	HP	150/(60–JOCKEY PUMP)
DRIVES	---	VFD FOR EACH PUMP BYPASS WITH SOFT START
OUTFALL PIPELINE		
NOMINAL PIPE DIAMETER (INTERNAL DIA PER SPECIFICATIONS)	INCH	36
VELOCITY AT DESIGN CAPACITY	FPS	4.8
MATERIAL	---	STEEL OR DUCTILE IRON PIPE
OUTFALL GRAVITY PIPELINE		
CAPACITY	MGD	22
NOMINAL PIPE DIAMETER	INCH	48
	---	RCP AND CMLSP
VELOCITY DESIGN FLOW	FPS	2.7

NOTE:

1. TERTIARY TREATED WASTEWATER EFFLUENT FROM THE TURLOCK REGIONAL WATER QUALITY CONTROL FACILITY. FLOW IS BY GRAVITY THROUGH TWO – 36" RCP PIPELINES AND A 24" RCP AUXILIARY PIPELINES.

REV	DATE	BY	DESCRIPTION

RECORD DRAWINGS

DESIGNED BA
DRAWN MR
CHECKED BEH
DATE MAY 2012

DISCIPLINE ENGINEER: ** ORIGINAL SEALED BY MICHAEL J. HARTLAUB 12/07/11 C74901 **
PROJECT ENGINEER: ** ORIGINAL SEALED BY DARREN G. BAUNE 12/07/11 C68899 **
VICE PRESIDENT: ** ORIGINAL SEALED BY MICHAEL J. BRITTEN 12/07/11 C27729 **

carollo

CITY OF TURLOCK INC. 1908
STANISLAUS COUNTY, CALIFORNIA

HARDING DRAIN BYPASS
PUMP STATION AND PIPELINE
GENERAL
HYDRAULIC PROFILE AND DESIGN CRITERIA

VERIFY SCALES
BAR IS ONE INCH ON ORIGINAL DRAWING
0 1"
IF NOT ONE INCH ON THIS SHEET, ADJUST SCALES ACCORDINGLY

JOB NO. 6918B.10
DRAWING NO. G–4
SHEET NO. 4 OF 107

FILENAME: C:\pw_working\projectwise\alaico\dms60457\G–00G004 8–25–14 04:39pm ALaico XREFS: G–BDR; BKA; Mjb; BEH; CA–MJB; CA–DGB; CA–MJH; CA–AEB; CA–GRS; CA–KAM; CA–ALM; CA–ALM_11–30–11; CA–DGB_11–30–11; CA–MJB_11–30–11 Turlck_City_LogoPMS_FNL;

Last Saved By: Alaico 5–28–14 01:40pm

ABBREV	DESCRIPTION	ABBREV	DESCRIPTION
AA	AERATION AIR	CCP	CONCRETE CYLINDER PIPE
AB	ANCHOR BOLT	CFM	CUBIC FOOT PER MINUTE
ABC	AGGREGATE BASE COURSE	CHAN	CHANNEL
AC	ASPHALTIC CONCRETE	CHS	CHLORINE RESIDUAL SENSOR
ACB	AIR CIRCUIT BREAKER		
ACP	ASBESTOS CEMENT PIPE OR ACOUSTIC CEILING PANELS	CHL	CHLORINE
		CHR	CHLORINE RESIDUAL
		CIP	CAST IRON PIPE
ACU	AIR CONDITIONING UNIT	CIRC	CIRCUMFERENTIAL
ADA	AMERICANS WITH DISABILITIES ACT	CISP	CAST IRON SOIL PIPE
ADJ	ADJUSTABLE	CJ	CONSTRUCTION JOINT
AFF	ABOVE FINISH FLOOR	CL OR ℄	CENTER LINE OR
AHR	ANCHOR		CLOSE (D)
AI	ANALOG INPUT	CLD	CHLORINE LEAK DETECTOR
AIC	AIR COMPRESSOR	CLG	CEILING
AID	AIR DRYER	CLP	CONTROL PANEL
ALM	ALARM	CLR	CLEAR
ALTN	ALTERNATE	CLS	CHLORINE SOLUTION
AL	ALUMINUM	CLSM	CONTROLLED LOW STRENGTH MATERIAL
AO	ANALOG OUTPUT		
APPROX	APPROXIMATE	CLV	CHLORINE VACUUM
ARCH	ARCHITECTURAL	CMLSP	CEMENT MORTAR LINED STEEL PIPE
ARV	AIR RELEASE VALVE		
ATC	ACOUSTICAL TILE CEILING	CMLCSP	CEMENT MORTAR LINED AND COATED STEEL PIPE
AWP	ACOUSTIC WALL PANEL		
AUTO	AUTOMATIC		
AUX	AUXILIARY	CMP	CORRUGATED METAL PIPE
AV	ANGLE VALVE	CMU	CONCRETE MASONRY UNIT
AVG	AVERAGE	CND	CONDUIT
@	AT	CO	CLEANOUT OR CONDUIT ONLY
		COL	COLUMN
BCV	BALL CHECK VALVE	COMP	COMPACTED
BCW	BARE COPPER WIRE	COMPA	COMPRESSED AIR
BD	BOARD	CONC	CONCRETE
BF	BLIND FLANGE	CONN	CONNECTION
BFP	BACK FLOW PREVENTER	CONSTR	CONSTRUCTION
BFV	BUTTERFLY VALVE	CONT	CONTINUE (D) (OUS) OR
BL	BLEACH		CONTROL
BLDG	BUILDING	CPLG	COUPLING
BLK	BLOCK	CPT	CONTROL POWER TRANSFORMER
BLKG	BLOCKING		
BLO	BLOWER	CR	CONDENSATE RETURN
BM	BEAM	CRN	CRANE
BRG	BEARING	CRPT	CARPET TILE
BRKR	BREAKER	CSP	CARBON STEEL PIPE
BS	BOTTOM SLUDGE	CT	CERAMIC TILE
BSC	BAR SCREEN	CTD	CENTERED
BSCIP	BELL & SPIGOT CAST IRON PIPE	CTSK	COUNTERSUNK
		CU	CUBIC
BSP	BLACK STEEL PIPE	CUP	COPPER PIPE
BTU	BRITISH THERMAL UNITS	CW	COLD WATER
BV	BALL VALVE		
BYP	BYPASS		
C	CONDUIT	DBL	DOUBLE
C TO C	CENTER TO CENTER	DCS	DECHLORINATION SOLUTION OR DISTRIBUTED CONTROL SYSTEM OR DILUTED CAUSTIC SOLUTION
CA	CONCRETE ANCHOR		
CB	CATCH BASIN		

G010 TYP S — ABBREVIATIONS — SHEET 1 OF 6 — 08-01-04C

ABBREV	DESCRIPTION	ABBREV	DESCRIPTION
DEF	DEFLECTION	EP	EXPLOSION PROOF
DEG	DEGREE	EQL	EQUAL
DET	DETAIL	EQPT	EQUIPMENT
DG	DIGESTER GAS	ES	EMERGENCY STOP
DGR	DEGRITTED RETURN	ESEW	EMERGENCY SHOWER AND EYEWASH
DGS	DIGESTED SLUDGE		
DI	DISCRETE INPUT	EW	EACH WAY
DIA OR ø	DIAMETER	EWC	ELECTRIC WATER COOLER
DIAG	DIAGONAL	EWH	ELECTRIC WATER HEATER
DIG	DIGESTER	EXIST	EXISTING
DIM	DIMENSION	EXP	EXPANSION
DIP	DUCTILE IRON PIPE	EXPO	EXPOSED
DIPBS	DUCTILE IRON PIPE, BELL & SPIGOT	EXT	EXTERIOR
DIPMJ	DUCTILE IRON PIPE, MECHANICAL JOINT	F	FIRE WATER
		FA	FLAME ARRESTOR OR FOUL AIR
DIST	DISTRIBUTION		
DJ	DOUBLE JOINT	FACP	FIRE ALARM CONTROL PANEL
DMPR	DAMPER		
DN	DOWN	FAE	FOUL AIR EXHAUST
DO	ENGINE DIESEL OIL OR DISCRETE OUTPUT	FAN	FAN
		FB	FLAT BAR
DR	DRAIN OR DRIVE	FC	FLEXIBLE CONNECTION OR FLEXIBLE COUPLING
DS	DOWN SPOUT		
DSL	DIGESTED SLUDGE	FCA	FLANGE COUPLING ADAPTER
DV	DIAPHRAGM VALVE	FCL	FAILS CLOSED OR FERRIC CHLORIDE
DW	DEWATERING PUMP DISCHARGE		
		FCS	FERRIC CHLORIDE SOLUTION
DWG	DRAWING	FCTF	FACTORY FINISH
		FCV	FLAPPER CHECK VALVE
		FD	FLOOR DRAIN
E	EAST OR BURIED ELECTRICAL	FDN	FOUNDATION
EA	EACH	FE	FINAL EFFLUENT OR FLOW ELEMENT
ECC	ECCENTRIC		
ED	EQUIPMENT DRAIN	FEC	FIRE EXTINGUISHER CABINET
EDB	ELECTRICAL DUCT BANK	FEXT	FIRE EXTINGUISHER
EE	ENGINE EXHAUST	FF	FAR FACE OR FACTORY FINISH
EF	EACH FACE OR EXHAUST FAN		
		FG	FINISH GRADE
		FHY	FIRE HYDRANT
EFL	EFFLUENT	FIG	FIGURE
EFU	EXHAUST FAN UNIT	FILP	FAILS IN LAST POSITION
EGR	ENGINE GENERATOR ROOM	FIN FL	FINISH FLOOR
EJW	ENGINE JACKET WATER	FIT	FLOW INDICATOR/ TRANSMITTER
EL	ELEVATION		
ELB	ELBOW	FL	FLOOR
ELEC	ELECTRIC (AL)	FLEX	FLEXIBLE
EMBED	EMBEDMENT	FLG	FLANGE
EMH	ELECTRICAL MANHOLE	FLGA	FLANGE ADAPTER
ENGR	ENGINEER	FLL	FLOW LINE
EO	EMERGENCY OVERFLOW	FLT	FILTRATE
EOP	EDGE OF PAVEMENT		

G010 TYP S — ABBREVIATIONS — SHEET 2 OF 6 — 08-01-04C

ABBREV	DESCRIPTION	ABBREV	DESCRIPTION
FO	FAILS OPEN OR FUEL OIL	HTR	HEATER
FOR	FUEL OIL RETURN	HW	HEATED DOMESTIC WATER OR HOT WATER
FOS	FUEL OIL SUPPLY		
FPR	FIRE ALARM CABLE PAIR	HWR	HOT WATER RETURN
FR	FORWARD-REVERSE	HWS	HOT WATER SUPPLY OR HIGH WATER SURFACE
FRP	FIBERGLASS REINFORCED PLASTIC		
FS	FAST-SLOW		
FSH	FLUSH SHELL	IA	INSTRUMENT AIR
FSLOS	FAST-SLOW LOCKOUT STOP	IC	INSTRUMENTATION CONDUIT
FSP	FABRICATED STEEL PIPE	ID	INTERIOR DIAMETER
FST	FAST OR FORWARD-STOP	IN OR "	INCH
FSST	FAST-SLOW-STOP	INCLR	INTERCOOLER
FT	FOOT	INF	INFLUENT
FTC	FAIL TO CLOSE	INJ	INJECTOR
FTG	FOOTING	INSTR	INSTRUMENT (ATION)
FTO	FAIL TO OPEN	INSUL	INSULATE (D) (ING) (TION)
		INTEG	INTEGRAL
G	GRIT PIPING	INTR	INTERIOR
GA	GAGE OR GAUGE	INVT	INVERT
GALV	GALVANIZE (D)	IPB	INSTRUMENTATION PULL BOX
GB	GRAB BAR	IPD	INFLUENT PUMP DISCHARGE
GEN	GENERATOR	IPR	INFLUENT PUMP RECYCLE
GFI	GROUND FAULT INTERRUPTOR	ISB	INFLUENT SEWER BYPASS
GL	GLASS	I/O	INPUT/OUTPUT MODULE
GLB	GLUE LAMINATED BEAM		
GLCIP	GLASS LINED CAST IRON PIPE		
GLV	GLOBE VALVE		
GND	GROUND	J	JOIST
GR	GRADE	JAN	JANITOR
GSP	GALVANIZED STEEL PIPE	JB	JUNCTION BOX
GTV	GATE VALVE	JT	JOINT
GWB	GYPSUM WALLBOARD		
GYP	GYPSUM		
		L	ANGLE OR LEFT
		LA	LIGHTNING ARRESTER
H1E	HOOK ONE END	LAB	LABORATORY
H2E	HOOK TWO ENDS	LAV	LAVATORY
HA	HAND-AUTO	LC	LOCK CLOSE
HCS	HYPOCHLORITE SOLUTION	LCP	LOCAL CONTROL PANEL
HDS	HEATED DIGESTED SLUDGE	LIM SW	LIMIT SWITCH
HDW	HARDWARE	LLA	LOW LEVEL ALARM
HLA	HIGH LEVEL ALARM	LLCO	LOW LEVEL CUT OFF
HM	HOLLOW METAL	LLH	LONG LEG HORIZONTAL
HOA	HAND-OFF-AUTO	LLV	LONG LEG VERTICAL
HORIZ	HORIZONTAL	LO	LOCK OUT
HPA	HIGH PRESSURE AIR	LOP	LOCK OPEN
HPS	HIGH PRESSURE SODIUM	LOR	LOCAL-OFF-REMOTE
HPT	HIGH POINT	LOS	LOCKOUT-STOP
HPU	HEAT PUMP UNIT	LP	LOW POINT OR LIQUID PROPANE
HR	HOSE RACK		

G010 TYP S — ABBREVIATIONS — SHEET 3 OF 6 — 08-01-04C

ABBREV	DESCRIPTION	ABBREV	DESCRIPTION
LPA	LOW PRESSURE AIR	NO	NORMALLY OPEN
LR	LONG RADIUS	NO OR #	NUMBER
LRA	LOCAL-REMOTE-AUTO	NOHC	NORMALLY OPEN HELD CLOSED
LS	LIMIT SWITCH		
LSA	LEVEL SENSOR, AIR (BUBBLER)	NOM	NOMINAL
		NP	NATIONAL PIPE THREAD
LTG	LIGHTNING	NTS	NOT TO SCALE
LUBO	LUBE OIL	NV	NEEDLE VALVE
LVR	LOUVER		
LWS	LOW WATER SURFACE	OC	ON CENTER
L/L	LEAD/LAG	OCL	OPEN-CLOSE
L/L/LL	LEAD/LAG/LAG-LAG	OD	OUTSIDE DIAMETER
L/R	LOCAL-REMOTE	OIS	OPERATOR INTERFACE STATION
		OP	OPEN
		OPNG	OPENING
MATL	MATERIAL	OPP	OPPOSITE
MAX	MAXIMUM	OPR	OPERATE(OR)
MCC	MOTOR CONTROL CENTER	OSC	OPEN-STOP-CLOSE
		OTF	OUTFALL
MCP	MOTOR CIRCUIT PROTECTOR	OVFL	OVERFLOW
		OVLD	OVERLOAD
MECH	MECHANICAL		
MFRS	MANUFACTURER'S		
MH	MANHOLE, SANITARY		
MIN	MINIMUM	PA	PAGING SYSTEM
MISC	MISCELLANEOUS	PB	PULL BOX
MJ	MECHANICAL JOINT	PCV	PLUG CONCENTRIC VALVE
MJDIP	MECHANICAL JOINT DUCTILE IRON PIPE	PD	PLANT DRAIN
		PE	PLANT EFFLUENT
MK	MARK	PEF	PRIMARY EFFLUENT
ML	MIXED LIQUOR	PERP	PERPENDICULAR
MON	MONUMENT	PEV	PLUG ECCENTRIC VALVE
MSL	MEAN SEA LEVEL	PG	PRESSURE GAUGE
MTD	MOUNTED	PH	PHASE
MV	MOTORIZED VALVE	PHW	PLANT HOT WATER
MWS	MAXIMUM WATER SURFACE	PI	POINT OF INTERSECTION
		PIN	PRIMARY INFLUENT
MXR	MIXER	PIV	PINCH VALVE
		PL	PLATE OR PROPERTY LINE
N	NORTH	PLC	PROGRAMMABLE LOGIC CONTROLLER
NA	NOT APPLICABLE		
NAT GR	NATURAL GRADE		
NC	NORMALLY CLOSED	PLCS	PLACES
NCHO	NORMALLY CLOSED HELD OPEN	PLE	PLAIN END
NDV	NEEDLE VALVE		
NF	NEAR FACE		
NG	NATURAL GAS		
NL	NIGHT LIGHT		

G010 TYP S — ABBREVIATIONS — SHEET 4 OF 6 — 08-01-04C

ABBREV	DESCRIPTION	ABBREV	DESCRIPTION
PLYWD	PLYWOOD	S	SOUTH
PMP	PUMP	SA	SAMPLE PIPING OR SERVICE AIR
PNL	PANEL		
POL	POLYMER	SC	SCUM
POLS	POLYMER SOLUTION	SCHED	SCHEDULE
PR	PAIR OR INSTRUMENT CABLE PAIR	SCS	SCRUBBER CHLORINE SOLUTION
PRC	PLANT RECYCLE		
PREFAB	PREFABRICATED	SCV	SWING CHECK VALVE
PRI	PRIMARY	SD	STORM DRAIN
PRPNE	PROPANE GAS	SE	SECONDARY EFFLUENT
PRV	PRESSURE REDUCING VALVE	SEC	SECONDARY
PS	PRIMARY SLUDGE	SECT	SECTION
PSC	PRIMARY SCUM	SEL	SELECT
PSI	POUND PER SQUARE INCH	SF	SUPPLY FAN
PV	PLUG VALVE	SGL	SINGLE
PVC	POLYVINYL CHLORIDE	SH	SHEET
PVCP	RIGID POLYVINYL CHLORIDE PIPE	SHW	SECONDARY HOT WATER
		SIL	SILENCE
PVMT	PAVEMENT	SIM	SIMILAR
		SL	SLOW
		SLG	SLUDGE OR SLUICE GATE
R	RIGHT OR PLANT RECYCLE FLOW	SLOS	START-LOCKOUT-STOP
		SLP	SLOPE
RAD	RADIUS	SN	SUPERNATANT
RAS	RETURN ACTIVATED SLUDGE	SOLV	SOLENOID VALVE
RCP	REINFORCED CONCRETE PIPE	SOV	SULFUR OXIDE VACUUM
		SP	STOP
RCPT	RECEPTACLE	SPEC	SPECIFICATION
RD	ROOF DRAIN	SPLP	SAMPLER PUMP
RDCR	REDUCER	SQ	SQUARE
RDR	ROLL-UP-DOOR	SR	STOP-RESET
RDY	READY	SRG	SPLIT RANGE
REF	REFERENCE	SS	SERVICE SINK OR START-STOP
REINF	REINFORCE (D)(ING)(MENT)		
REJ	RUBBER EXPANSION JOINT		
REQD	REQUIRED	SSC	SECONDARY SCUM
REV	REVISION OR REVERSE ACTING	SSL	SECONDARY SLUDGE
		SST	STAINLESS STEEL
RM	ROOM	SSTT	SOLID STATE TRIP
RMT	REMOTE	SSW	SANITARY SEWER
RP	RADIUS POINT	ST	STEAM OR START
RS	RAW SEWAGE	STA	STATION
RTM	RUNNING TIME METER	STD	STANDARD
R/W	RIGHT-OF-WAY	STL	STEEL
		STOR	STORAGE

G010 TYP S — ABBREVIATIONS — SHEET 5 OF 6 — 08-01-04C

ABBREV	DESCRIPTION	ABBREV	DESCRIPTION
STR	STRAINER	V OR VLV	VALVE
STRL	STRUCTURAL	VAC	VACUUM
SUSP	SUSPENDED	VB	VALVE BOX
SJVAD	SAN JOAQUIN VALLEY AIR DISTRICT	VC	VICTAULIC COUPLER
		VCP	VITRIFIED CLAY PIPE
SW	SOFTENED WATER	VERT	VERTICAL
SWGR	SWITCHGEAR	VFD	VARIABLE FREQUENCY DRIVE
SWR	SEAL WATER	VN	VENT
SYMM	SYMMETRICAL	VOL	VOLUME
S/W	SIDEWALK	VP	VENT PIPE
		VTR	VENT THROUGH ROOF
TBG	TUBING		
TD	THERMAL DISPERSION		
TDR	TOWEL DISPENSER/ RECEPTACLE		WEST
		WAS	WASTE ACTIVATED SLUDGE
TE	THICKENER EFFLUENT	WC	WATER CLOSET
TEL	TELEPHONE SERVICE OR TELEPHONE	WD	WOOD
		WF	WIDE FLANGE (BEAM)
		WH	WATER HEATER
TEMP	TEMPERATURE	WO	WASTE OIL
TFR	TRANSFORMER	WP	WORKING POINT OR WEATHERPROOF
TH	TOILET PAPER HOLDER		
THERMO	THERMOSTAT	WS	WATER SURFACE
THK	THICK	WWF	WELDED WIRE FABRIC
THO	THICKENER OVERFLOW	W/	WITH
THRU	THROUGH	W/O	WITHOUT
TID	TURLOCK IRRIGATION DISTRICT		
TJB	TELEPHONE JUNCTION BOX		
TNK	TANK	XFMR	TRANSFORMER
TOC	TOP OF CONCRETE		
TOS	TOP OF STEEL	YD	YARD
TOW	TOP OF WEIR		
TPS	THICKENED PRIMARY SLUDGE	1W	POTABLE WATER
TS	THICKENED SLUDGE	2W	NON-POTABLE WATER
TWAS	THICKENED WASTE ACTIVATED SLUDGE	2W/HW	HEATED 2W
		3W	PLANT EFFLUENT
TYP	TYPICAL	4WV	FOUR WAY VALVE
T&B	TOP AND BOTTOM		
T&G	TONGUE AND GROOVE		
UNO	UNLESS NOTED OTHERWISE		
UPS	UNINTERRUPTIBLE POWER SUPPLY		
UR	URINAL		

G010 TYP S — ABBREVIATIONS — SHEET 6 OF 6 — 08-01-04C

AIR OR CHEMICAL DIFFUSER
QUICK DISCONNECT HIGH PRESSURE AIR OR FLUSHING
BATCHMETER
AIR VENT
BACK FLOW PREVENTER
BLOWER
CALIBRATION COLUMN
COMPRESSOR/TURBINE
COMPRESSOR: RECIPROCATING
DIAPHRAGM SEAL
DRAIN
EJECTOR OR EDUCTOR
ELECTRIC MOTOR
EQUIPMENT DRAIN
FAN: EXHAUST/SUPPLY
FILTER
FIRE HYDRANT
FLAME ARRESTER
FLAME ARRESTER WITH THERMALLY OPERATED VALVE
FLOOR DRAIN
GAUGE: PRESSURE
GAUGE: DIFFERENTIAL PRESSURE
GRINDER
MIXER
OIL OR MOISTURE TRAP
PRIMARY LEVEL ELEMENT: BUBBLER
PRIMARY LEVEL ELEMENT: FLOAT SWITCH
PRIMARY LEVEL ELEMENT: PROBE

G020 TYP S — MECHANICAL SYMBOLS — SHEET 1 OF 3 — 08-01-04C

PRIMARY LEVEL ELEMENT: ULTRASONIC
PRIMARY FLOW ELEMENT: FLUME
PRIMARY FLOW ELEMENT:
X = C – CORIOLOS
X = M – MAGNETIC
X = P – PROPELLER
X = PT – PITOT TUBE
X = R – ROTAMETER
X = T – TURBINE
X = TH – THERMAL
X = U – ULTRASONIC
X = D – DENSITY
PRIMARY FLOW ELEMENT: ORIFICE PLATE
PRIMARY FLOW ELEMENT: VENTURI TUBE
PRIMARY FLOW ELEMENT: WEIR
PULSATION DAMPENER
PUMP: CENTRIFUGAL
PUMP: DIAPHRAGM
PUMP: METERING
PUMP: PLUNGER
PUMP: PROGRESSIVE CAVITY
PUMP: RECIPROCATING
PUMP: ROTARY
PUMP: SCREW
PUMP: SUBMERSIBLE
PUMP: VERTICAL LIFT
REDUCER: CONCENTRIC
REDUCER: ECCENTRIC
ROTARY CHEMICAL FEEDER
RUPTURE DISK
SAMPLE PORT
SIGHT GLASS
SLIDE GATE
SLUICE GATE
STRAINER: WYE TYPE
STRAINER: WYE TYPE WITH BLOWOFF

G020 TYP S — MECHANICAL SYMBOLS — SHEET 2 OF 3 — 08-01-04C

THERMOMETER
VALVE: ANGLE
VALVE: AIR RELIEF
VALVE: BALL
VALVE: BALL CHECK
VALVE: BUTTERFLY
VALVE: CONE
VALVE: DIAPHRAGM
VALVE: FLAPPER CHECK
VALVE: FOUR WAY
VALVE: GATE
VALVE: GLOBE
VALVE: HOSE
VALVE: NEEDLE
VALVE: PINCH
VALVE: PLUG CONCENTRIC
VALVE: PLUG ECCENTRIC
VALVE: PRESSURE RELIEF PRESSURE-REDUCING REGULATOR
VALVE: SWING CHECK
VALVE: TELESCOPING
VALVE: THREE WAY AIR OPERATED
VALVE: THREE WAY MOTOR OPERATED
VALVE: THREE WAY SOLENOID OPERATED
VALVE: VACUUM
BACKPRESSURE REGULATOR SELF-CONTAINED
BACKPRESSURE REGULATOR W/EXTERNAL PRESSURE TAP
PRESSURE-REDUCING REGULATOR: SELF CONTAINED
PRESSURE-REDUCING REGULATOR W/EXTERNAL PRESSURE TAP

G020 TYP S — MECHANICAL SYMBOLS — SHEET 3 OF 3 — 08-01-04C

REV	DATE	BY	DESCRIPTION
			RECORD DRAWINGS

DESIGNED CE
DRAWN CE/RC
CHECKED CAG
DATE MAY 2012

DISCIPLINE ENGINEER: ** ORIGINAL SEALED BY MICHAEL J. HARTLAUB 12/07/11 C74901 **
PROJECT ENGINEER: ** ORIGINAL SEALED BY DARREN G. BAUNE 12/07/11 C68899 **
VICE PRESIDENT: ** ORIGINAL SEALED BY MICHAEL J. BRITTEN 12/07/11 C27729 **

carollo

CITY OF TURLOCK INC. 1908
STANISLAUS COUNTY, CALIFORNIA

HARDING DRAIN BYPASS
PUMP STATION AND PIPELINE
TYPICAL DETAILS
TYPICAL DETAILS GENERAL

VERIFY SCALES
BAR IS ONE INCH ON ORIGINAL DRAWING
0 — 1"
IF NOT ONE INCH ON THIS SHEET, ADJUST SCALES ACCORDINGLY

JOB NO. 6918B.10
DRAWING NO. T-1
SHEET NO. 5 OF 107

FILENAME: C:\pw_working\projectwise\alaico\dms60465\T-00T001 8-25-14 04:40pm ALaico XREFS: G-BDR; Mjb; BEH; CA-MJB; CA-DGB; CA-MJH; CA-AEB; CA-GRS; CA-KAM; CA-ALM; CA-ALM_11-30-11; CA-DGB_11-30-11; CA-MJB_11-30-11 Turlock_City_LogoPMS_FNL;

Last Saved By: dthung 5-11-12 03:45pm

TYPE OF JOINT OR COUPLER	THREE LINE PIPE
FLANGED JOINT	
MECHANICAL JOINT	
RESTRAINED MECHANICAL JOINT	R
WELDED JOINT	
PUSH-ON JOINT	
RESTRAINED PUSH-ON JOINT	R
SCREWED JOINT	
CONCRETE OR CLAY PIPE JOINT	

G022 TYP — PIPE JOINT AND COUPLER SYMBOLS
SHEET 1 OF 2 — 08-01-04C

TYPE OF JOINT OR COUPLER	THREE LINE PIPE
GROOVED COUPLING	
FLANGED COUPLING ADAPTER	
RESTRAINED FLANGED COUPLING ADAPTER	R
FLEXIBLE COUPLING	
RESTRAINED FLEXIBLE COUPLING FOR STEEL PIPE	
RESTRAINED FLEXIBLE COUPLING FOR FLANGED PIPE	
DISMANTLING JOINT	
EXPANSION JOINT	

G022 TYP — PIPE JOINT AND COUPLER SYMBOLS
SHEET 2 OF 2 — 08-01-04C

VIEW IN SECTION

MATERIAL	EXISTING	REMOVE	NEW
CLASS "A", "B", AND "D" CONCRETE			
CLASS "C" CONCRETE			
STEEL			
CAST IRON OR FIBERGLASS			
ALUMINUM			
BRICK OR BLOCK			
WOOD CROSS GRAIN, FINISH			
STRUCTURAL WOOD			
BRONZE, BRASS, OR COPPER			
ABC			
RUBBER			
SOIL			

VIEW IN PLAN (NEW SHOWN – EXISTING SCREENED)

FINISH WOOD GRAIN		TREAD PLATE	
GRATING	SPAN	PAVEMENT	

G030 TYP S — BUILDING MATERIALS LEGEND
08-01-04C

CIVIL DRAWINGS

- NEW STRUCTURES
- EXISTING STRUCTURES
- NEW PIPING (TRIPLE LINES)
- NEW PIPING (SINGLE LINE)
- EXISTING PIPING (TRIPLE LINES)
- EXISTING PIPING (SINGLE LINE)
- HIDDEN LINE
- HIDDEN LINE (EXISTING)
- CENTER, MONUMENT, OR SURVEY LINE
- GUARDRAIL
- EXISTING CONTOURS — 308
- NEW CONTOURS — 308
- NEW FENCE — X X X
- EXISTING FENCE — X X X
- REMOVE (CROSS HATCHING: FENCE SHOWN AS EXAMPLE)
- POWER POLE & LINE — E PP E
- PROPERTY LINE OR RIGHT OF WAY
- SLOPE — TOP TOE
- RAILROAD
- CITY LIMITS
- FUTURE ROAD
- EXISTING ROAD
- CURB & GUTTER — OR
- REQUIRED SHORING

G032 TYP S — LINE WORK
SHEET 1 OF 5 — 08-01-04C

MECHANICAL AND HVAC DRAWINGS

- NEW OR EXISTING STRUCTURES
- NEW OR EXISTING STRUCTURES HIDDEN
- NEW PIPING (TRIPLE LINES)
- NEW PIPING HIDDEN (TRIPLE LINES)
- NEW PIPING (SINGLE LINE)
- NEW PIPING HIDDEN (SINGLE LINE)
- EXISTING PIPING (TRIPLE LINES)
- EXISTING PIPING HIDDEN (TRIPLE LINES)
- EXISTING PIPING (SINGLE LINE)
- EXISTING PIPING HIDDEN (SINGLE LINE)
- NEW EQUIPMENT OR PIPING CENTERLINE
- EXISTING EQUIPMENT OR PIPING CENTERLINE
- NEW EQUIPMENT
- NEW EQUIPMENT HIDDEN
- EXISTING EQUIPMENT
- NEW FITTING
- EXISTING TO BE REMOVED
- NEW PIPING CALL-OUT — 3-PW
- EXISTING PIPING CALL-OUT — 3-PW

G032 TYP S — LINE WORK
SHEET 2 OF 5 — 08-01-04C

ELECTRICAL DRAWINGS

- NEW EMBEDDED OR ENCASED HOMERUN WITH DESTINATION INDICATED — PNL 4A
- NEW EXPOSED HOMERUN WITH DESTINATION INDICATED — PNL 4A
- NEW CONDUIT IN DUCTBANK, SLAB OR BELOW GRADE
- NEW EXPOSED CONDUIT
- CONDUIT BENDS TOWARD OBSERVER
- CONDUIT BENDS AWAY FROM OBSERVER
- EXISTING EXPOSED CONDUIT
- EXISTING CONDUIT IN DUCTBANK, SLAB OR BELOW GRADE
- CONDUIT CHANGE IN ELEVATION
- CONDUIT STUBBED-OUT AND CAPPED
- CONDUIT ENDS WITH INSULATED BUSHING UNLESS OTHERWISE NOTED
- FLEXIBLE CONDUIT
- SUBMERSIBLE CABLE
- CABLE WIREWAY, 3" OR 4" SQ — WW

G032 TYP S — LINE WORK
SHEET 3 OF 5 — 08-01-04C

INSTRUMENTATION DRAWINGS

- ELECTRICAL SIGNAL
- DATA SIGNAL
- ELECTROMAGNETIC OR SONIC SIGNAL
- PNEUMATIC SIGNAL
- HYDRAULIC SIGNAL
- CAPILLARY TUBE
- INSTRUMENT SUPPLY OR CONNECTION TO PROCESS
- SCREENED INSTRUMENT LINES INDICATE EXISTING LINES TO REMAIN AS IS (ELECTRIC SIGNAL SHOWN – TYPICAL FOR OTHER SIGNALS)

CONNECTING LINES — NON-CONNECTING LINES

G032 TYP S — LINE WORK
SHEET 4 OF 5 — 08-01-04C

STRUCTURAL DRAWINGS

- NEW STRUCTURES
- EXISTING STRUCTURES
- NEW PIPING UNDER SLAB (TRIPLE LINES)
- NEW PIPING UNDER SLAB (SINGLE LINE)
- EXISTING PIPING UNDER SLAB (TRIPLE LINES)
- EXISTING PIPING UNDER SLAB (SINGLE LINE)
- HIDDEN LINE
- EXISTING HIDDEN LINE
- NEW CENTERLINE
- EXISTING CENTERLINE
- GUARDRAIL
- EXISTING TO BE REMOVED
- STRUCTURAL OPENING
- REINFORCING BARS
- SLOPE LINE

G032 TYP S — LINE WORK
SHEET 5 OF 5 — 08-01-04C

N D-12 — DETAIL OR SECTION IDENTIFICATION

N — DETAIL OR SECTION TAKEN ON THE SAME SHEET

DETAIL OR SECTION IS TAKEN ON THE DRAWING INDICATED

AT TITLE

B125 TYP — TYPICAL DETAIL REFERENCE BUBBLE

TYPICAL DETAIL NUMBER IDENTIFICATION

N D-11 — DETAIL OR SECTION IDENTIFICATION

N' — DETAIL OR SECTION REFERENCE BUBBLE

DETAIL OR SECTION IS TO BE FOUND ON THE SAME SHEET

DETAIL OR SECTION IS TO BE FOUND ON THE DRAWING INDICATED

TYPICAL DETAIL IS TO BE FOUND ON THE TYPICAL DETAIL DRAWINGS

AT CROSS REFERENCE

G034 TYP S — DRAWING CROSS REFERENCE
08-01-04C

RECORD DRAWINGS

REV	DATE	BY	DESCRIPTION

DESIGNED	CE
DRAWN	CE/RC
CHECKED	CAG
DATE	MAY 2012

DISCIPLINE ENGINEER: ** ORIGINAL SEALED BY MICHAEL J. HARTLAUB 12/07/11 C74901 **

PROJECT ENGINEER: ** ORIGINAL SEALED BY DARREN G. BAUNE 12/07/11 C68899 **

VICE PRESIDENT: ** ORIGINAL SEALED BY MICHAEL J. BRITTEN 12/07/11 C27729 **

carollo

CITY OF TURLOCK INC. 1908 — STANISLAUS COUNTY, CALIFORNIA

HARDING DRAIN BYPASS
PUMP STATION AND PIPELINE
TYPICALS
TYPICAL DETAILS
GENERAL

VERIFY SCALES — BAR IS ONE INCH ON ORIGINAL DRAWING 0 — 1" — IF NOT ONE INCH ON THIS SHEET, ADJUST SCALES ACCORDINGLY

JOB NO. 6918B.10
DRAWING NO. T-2
SHEET NO. 6 OF 107

FILENAME: C:\pw_working\projectwise\alaico\dms60465\T-00T002 8-25-14 04:41pm ALaico XREFS: G-BDR; Mjb; BEH; CA-MJB; CA-DGB; CA-MJH; CA-AEB; CA-GRS; CA-KAM; CA-ALM; CA-ALM_11-30-11; CA-DGB_11-30-11; CA-MJB_11-30-11 Turlock_City_LogoPMS_FNL;

Last Saved By: dthung 5-11-12 03:47pm

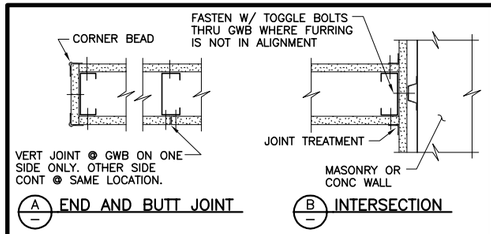

A003 TYP NON-LOAD BEARING METAL STUD FRAMING SHEET 1 OF 2 08-01-04C

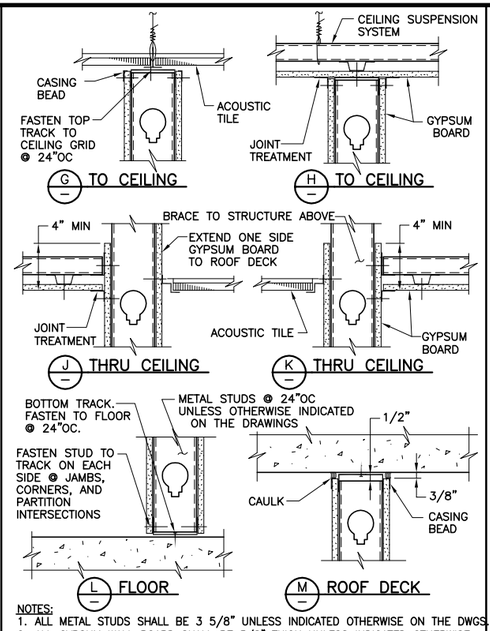

NOTES:
1. ALL METAL STUDS SHALL BE 3 5/8" UNLESS INDICATED OTHERWISE ON THE DWGS.
2. ALL GYPSUM WALL BOARD SHALL BE 5/8" THICK UNLESS INDICATED OTHERWISE ON THE DWGS.

A003 TYP NON-LOAD BEARING METAL STUD FRAMING SHEET 2 OF 2 08-01-04C

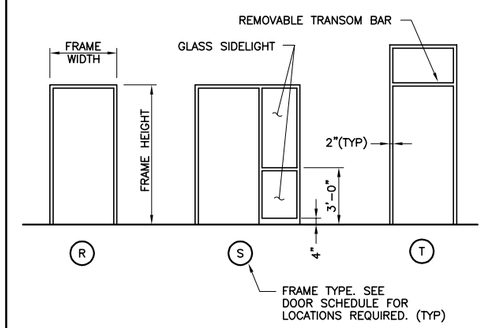

NOTES:
1. SEE DOOR SCHEDULE FOR FRAME SIZE, MATERIAL, & DETAILS.
2. SIDELIGHT MAY BE ON EITHER SIDE OF DOOR. SEE DRAWINGS FOR REQUIRED SIDELIGHT LOCATION.
3. GLASS @ SIDELIGHTS SHALL BE TEMPERED.
4. GLASS @ INTERIOR SIDELIGHTS SHALL BE CLEAR. GLASS @ EXTERIOR SIDELIGHTS SHALL BE TINTED INSULATING GLASS.

A104 TYP DOOR FRAME TYPES 08-01-04C

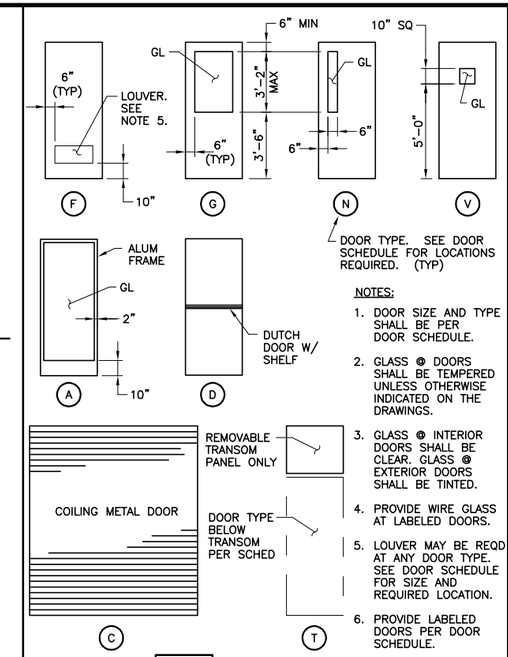

NOTES:
1. DOOR SIZE AND TYPE SHALL BE PER DOOR SCHEDULE.
2. GLASS @ DOORS SHALL BE TEMPERED UNLESS OTHERWISE INDICATED ON THE DRAWINGS.
3. GLASS @ INTERIOR DOORS SHALL BE CLEAR. GLASS @ EXTERIOR DOORS SHALL BE TINTED.
4. PROVIDE WIRE GLASS AT LABELED DOORS.
5. LOUVER MAY BE REQD AT ANY DOOR TYPE. SEE DOOR SCHEDULE FOR SIZE AND REQUIRED LOCATION.
6. PROVIDE LABELED DOORS PER DOOR SCHEDULE.

A105 TYP DOOR TYPES 08-01-04C

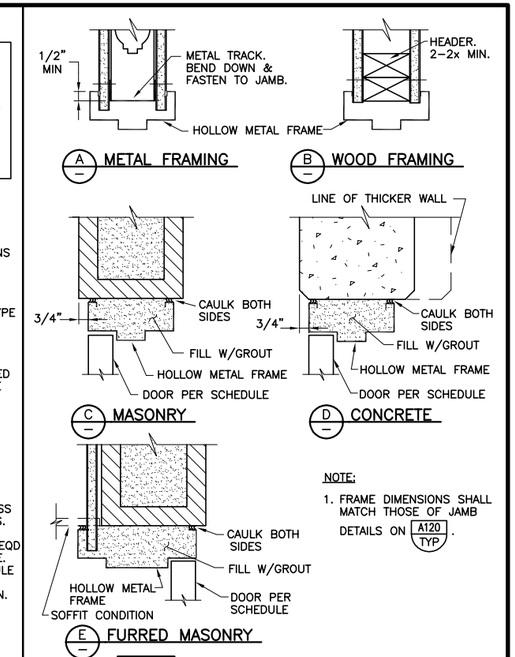

NOTE:
1. FRAME DIMENSIONS SHALL MATCH THOSE OF JAMB DETAILS ON A120 TYP.

A112 TYP DOOR HEAD DETAILS 08-01-04C

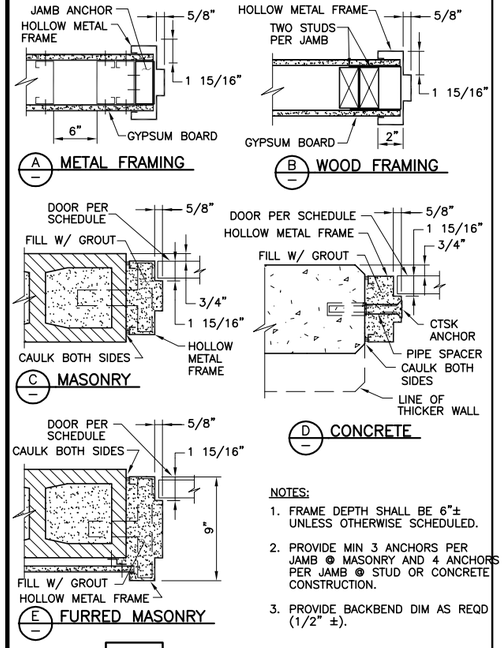

NOTES:
1. FRAME DEPTH SHALL BE 6"± UNLESS OTHERWISE SCHEDULED.
2. PROVIDE MIN 3 ANCHORS PER JAMB @ MASONRY AND 4 ANCHORS PER JAMB @ STUD OR CONCRETE CONSTRUCTION.
3. PROVIDE BACKBEND DIM AS REQD (1/2" ±).

A120 TYP DOOR JAMB DETAILS 08-01-04C

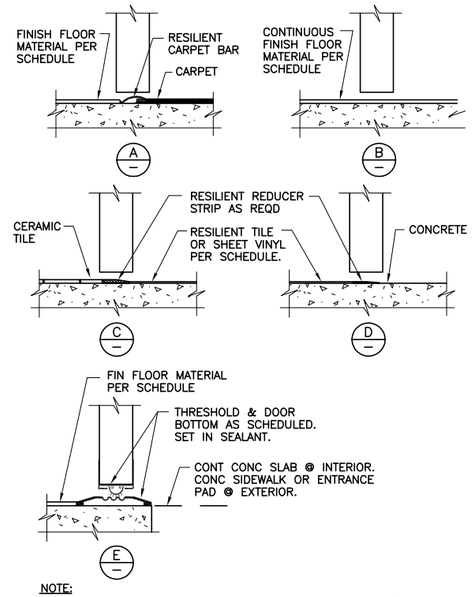

NOTE:
1. DOOR CLEARANCE AT BOTTOM OF DOOR SHALL BE 1/4" MIN AND 3/8" MAX.

A122 TYP DOOR SILL DETAILS 08-01-04C

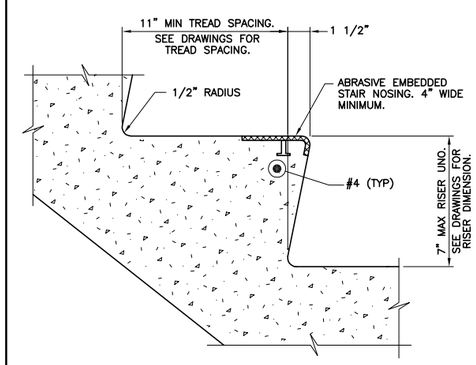

NOTE:
1. ANY FASTENERS IN THE STAIR NOSING SHALL BE TYPE 304 OR 316 SST.

A204 TYP S CONCRETE STEP 08-01-05

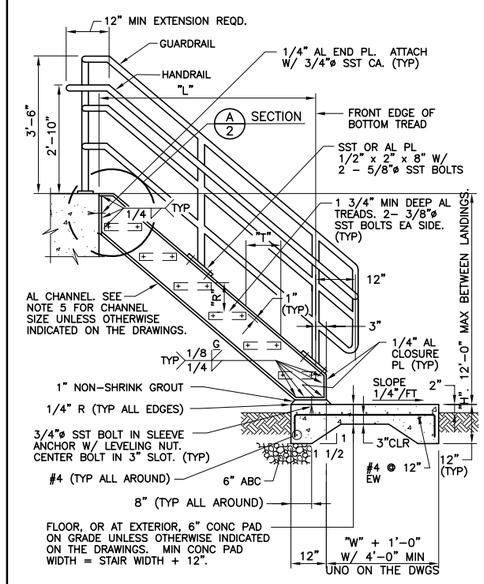

A238 TYP NS ALUMINUM STAIRWAY W/O TOP TREAD WITH THREE RAIL GUARDRAIL FOR IBC SHEET 1 OF 2 07-31-08

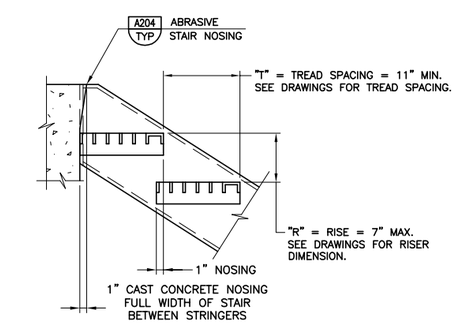

NOTES:
1. SEE DRAWINGS FOR DIMENSIONS "H", "L", "R", "T", AND STAIR WIDTH "W". STAIR WIDTH = 3'-0" CLR BETWEEN CHANNELS UNLESS OTHERWISE INDICATED ON THE DRAWINGS.
2. SEE A340 TYP FOR GUARDRAIL NOTES AND A343 TYP FOR GUARDRAIL DETAILS.
3. COAT ALL AL SURFACES IN CONTACT W/CONC PER SPECIFICATIONS.
4. AL CS10 x 6.14 FOR "L" LESS THAN OR EQUAL TO 14'-0". AL CS12 x 8.27 FOR "L" GREATER THAN 14'-0" AND LESS THAN OR EQUAL TO 18'-0".
5. TREAD WIDTH = TREAD SPACING + 1" (TYP ALL TREADS).

A238 TYP NS ALUMINUM STAIRWAY W/O TOP TREAD WITH THREE RAIL GUARDRAIL FOR IBC SHEET 2 OF 2 07-31-08

REV	DATE	BY	DESCRIPTION
			RECORD DRAWINGS

DESIGNED CE
DRAWN CE/RC
CHECKED CAG
DATE MAY 2012

DISCIPLINE ENGINEER: ** ORIGINAL SEALED BY MICHAEL J. HARTLAUB 12/07/11 C74901 **
PROJECT ENGINEER: ** ORIGINAL SEALED BY DARREN G. BAUNE 12/07/11 C68899 **
VICE PRESIDENT: ** ORIGINAL SEALED BY MICHAEL J. BRITTEN 12/07/11 C27729 **

carollo

CITY OF TURLOCK INC. 1908
STANISLAUS COUNTY, CALIFORNIA

HARDING DRAIN BYPASS
PUMP STATION AND PIPELINE
TYPICALS
TYPICAL DETAILS ARCHITECTURAL

VERIFY SCALES
BAR IS ONE INCH ON ORIGINAL DRAWING
0 1"
IF NOT ONE INCH ON THIS SHEET, ADJUST SCALES ACCORDINGLY

JOB NO. 6918B.10
DRAWING NO. T-3
SHEET NO. 7 OF 107

FILENAME: C:\pw_working\projectwise\alaico\dms60465\T-00T003 8-25-14 04:42pm ALaico XREFS: G-BDR; Mjb; BEH; CA-MJB; CA-DGB; CA-MJH; CA-AEB; CA-GRS; CA-KAM; A204; CA-ALM; CA-ALM_11-30-11; CA-DGB_11-30-11; CA-MJB_11-30-11 Turlock_City_LogoPMS_FNL;

Last Saved By: dthurna 5-11-12 03:48pm

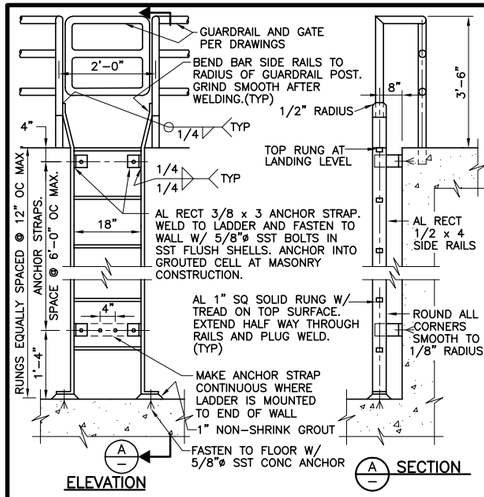

NOTES:

1. INSTALL FALL PREVENTION SYSTEM, OR SAFETY CAGE, WHERE HEIGHT OF LADDER EXCEEDS 20'-0". SEE A254 TYP
2. MINIMUM CLEARANCE TO ANY OBSTRUCTION ADJACENT TO LADDER: 2'-6" AT CLIMBING SIDE (2'-3" AT SMOOTH WALL) AND 1'-3" EACH SIDE OF CENTER LINE, AT SIDES OF LADDER.
3. COAT ALL AL SURFACES IN CONTACT WITH CONCRETE OR MASONRY, IN ACCORDANCE WITH THE SPECIFICATIONS.
4. WHERE GUARDRAIL IS SST, BOLT PIPE TO RAIL W/ 2- 1/2"ø SST BOLTS.

A250 TYP — ALUMINUM LADDER FASTENED TO WALL

S 08-01-04C

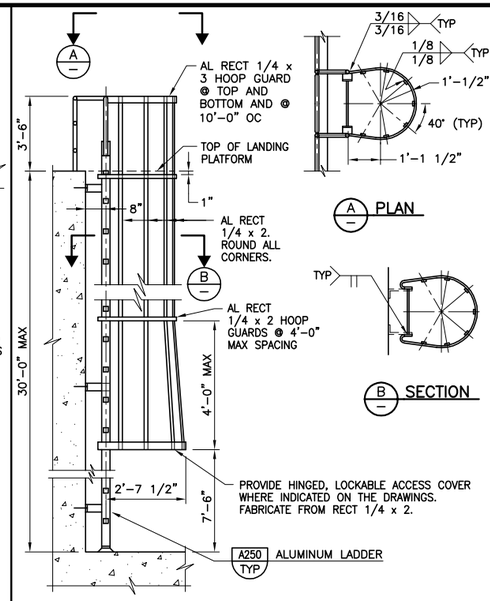

A254 TYP — ALUMINUM CAGED LADDER FASTENED TO WALL

08-01-05

1. GUARDRAIL SHALL BE PROVIDED AT WALKING SURFACE WHEN IT IS ELEVATED MORE THAN 30" ABOVE GRADE OR ADJACENT CONSTRUCTION.
2. SEE DRAWINGS OR SPECIFICATIONS FOR GUARDRAIL MATERIAL TYPE(S).
3. HANDRAIL SHALL BE PROVIDED AT BOTH SIDES OF EVERY STAIR HAVING TWO OR MORE RISERS, EXCEPT THAT PRIVATE STAIRS 30" OR LESS IN HEIGHT MAY HAVE HANDRAIL ON ONLY ONE SIDE.
4. HANDRAIL SHALL BE CONTINUOUS THE FULL LENGTH OF THE STAIR, AT LEAST ONE RAIL SHALL BE PROVIDED WITH HANDRAIL EXTENSIONS, TOP AND BOTTOM.
5. INSIDE HANDRAIL ON SWITCHBACK STAIRS SHALL BE CONTINUOUS.
6. WALL MOUNTED HANDRAILS SHALL BE SINGLE RAIL WITH TOP OF RAIL AT 2'-10" HEIGHT ABOVE LANDINGS OR TREAD NOSINGS, MATCHING TOP RAILING ON OPPOSITE SIDE.
7. ALL GUARDRAILS SHALL BE FIXED UNLESS OTHERWISE INDICATED ON THE DRAWINGS.
8. PLACE CENTER OF EMBEDDED POSTS 4" FROM EDGE OF CONCRETE AND 6" FROM EDGE OF CONCRETE STAIR NOSINGS UNLESS OTHERWISE INDICATED ON THE DRAWINGS.
9. PLACE RAIL POSTS OPPOSITE EACH OTHER WHERE RAILINGS ARE PARALLEL.
10. FOR RAIL POSTS MOUNTED TO BEAM OR STAIR CHANNEL, PROVIDE MANUFACTURERS REINFORCED CONNECTION FROM POST TO PLATE. PLATE AND REINFORCED INSERTS SHALL BE ALUMINUM OR STAINLESS STEEL.
11. PROVIDE SLIP JOINTS AT 24' MAX CENTERS FOR EXPANSION OF RAILS AND KICKPLATE. LOCATE RAIL SLIP JOINTS AT FACE OF POST. GAP AT TIME OF INSTALLATION SHALL BE BASED ON TEMPERATURE OF HANDRAIL (3/8" GAP AT 25°F, 0" GAP AT 100°F). AT CONCRETE EXPANSION JOINTS, PROVIDE MINIMUM OF 1" GAP IN SLIP JOINTS BUT NOT LESS THAN WIDTH OF CONCRETE EXPANSION JOINT. INSERT SLEEVES SHALL BE LONG ENOUGH TO ALLOW FOR THE FULL RANGE OF MOVEMENT.
12. MATERIAL FOR SLIP JOINT PLATE AND KICKPLATE CHANNEL SHALL BE OF THE SAME MATERIAL AS THE GUARDRAIL.
13. ALL JOINTS FOR STAINLESS STEEL HANDRAIL AND GUARDRAIL SHALL BE COPED, WELDED, AND GROUND SMOOTH.
14. PROVIDE KICKPLATE AT ALL LOCATIONS EXCEPT AT SLOPING GUARDRAIL ON STAIRS AND WHERE GUARDRAIL IS MOUNTED ON A 4" MIN CURB. KICKPLATE MAY BE EXTRUDED OR BENT PLATE AND SHALL BE ATTACHED WITH SST BOLTS IN 5/16" x 3/4" SLOTTED HOLES. BOLT KICKPLATE TO POST WITH BOTTOM 1/4" CLEAR FROM FLOOR. FOR SIDE MOUNTED HANDRAIL, PROVIDE STANDARD SPACER BLOCK BETWEEN POST AND KICKPLATE TO MAINTAIN 1/4" MAX CLEAR SPACING. HAND TIGHTEN AND CENTER PUNCH BOLT TO LOCK. SPLICES SHALL ACCOMMODATE TEMPERATURE EXPANSION PER NOTE 11.
15. COAT ALL SURFACES OF ALUMINUM THAT COME IN CONTACT WITH CONCRETE IN ACCORDANCE WITH SPECIFICATIONS. PLACE NEOPRENE GASKET BETWEEN ALUM AND STEEL.

A300 TYP NS — GUARDRAIL NOTES

08-01-04C

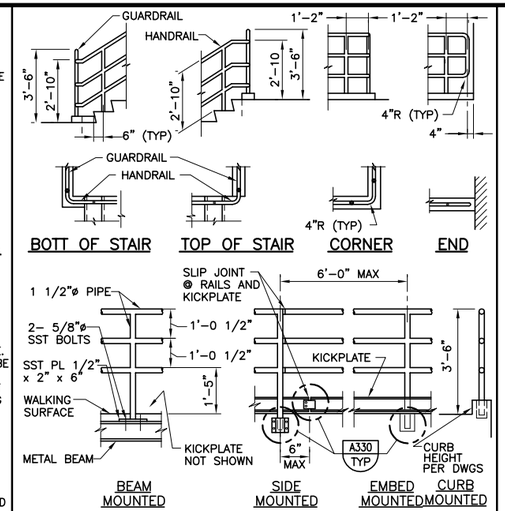

GUARDRAIL ELEVATION

NOTES:

1. THIS DETAIL IS APPLICABLE AT PRIVATE STAIRS WHERE OPERATOR ONLY ACCESSIBILITY IS REQUIRED. DETAILS AND INSTALLATION SHALL COMPLY WITH THE BUILDING CODE.
2. FOR ADDITIONAL REQUIREMENTS, SEE SPECIFICATIONS AND A300 TYP
3. VARIOUS POST MOUNTING DETAILS ARE ILLUSTRATED. SEE DRAWINGS FOR SPECIFIC MOUNTING REQUIREMENTS.

A306 TYP NS — THREE RAIL GUARDRAIL (PRIVATE) SHEET 1 OF 3

08-01-04C

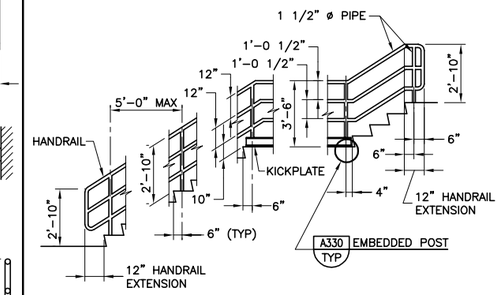

STAIR GUARDRAIL ELEVATION

NOTES:

1. SEE SPECIFICATIONS AND A300 TYP FOR ADDITIONAL REQUIREMENTS.
2. HANDRAIL EXTENSIONS ARE NOT REQUIRED WHERE HANDRAIL IS CONTINUOUS.

A306 TYP NS — THREE RAIL GUARDRAIL (PRIVATE) SHEET 2 OF 3

08-01-04C

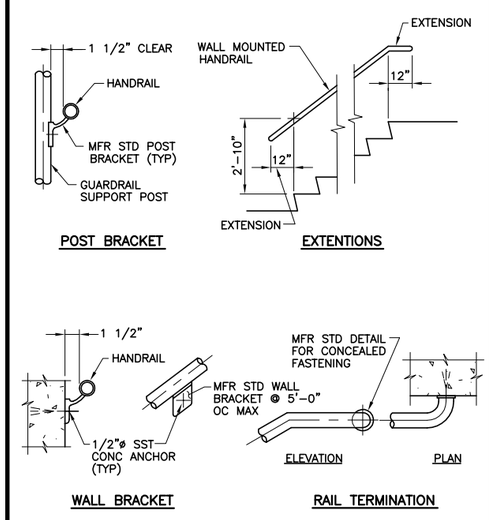

SINGLE RAIL DETAILS

A306 TYP NS — THREE RAIL GUARDRAIL (PRIVATE) SHEET 3 OF 3

08-01-04C

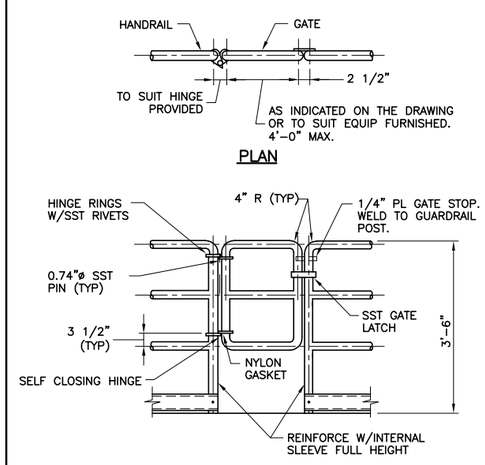

NOTES:

1. GATE MATERIAL AND FINISH SHALL MATCH GUARDRAIL.
2. GATE SHALL OPEN TOWARD THE WALKWAY.
3. THREE RAIL GATE SHOWN. FOR PICKET TYPE GUARDRAIL, RAILS IN GATE SHALL MATCH GUARDRAIL. PICKET TYPE GATE SHALL EXTEND DOWN TO 4" ABOVE FLOOR.

A320 TYP S — GATE AT GUARDRAIL

08-01-04C

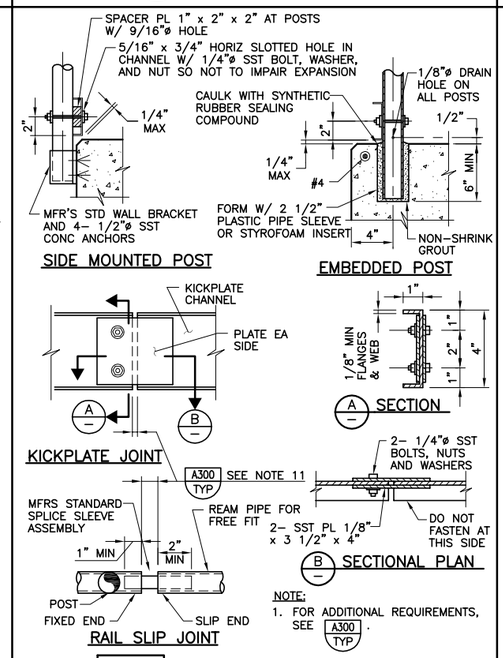

NOTE:

1. FOR ADDITIONAL REQUIREMENTS, SEE A300 TYP.

A330 TYP NS — GUARDRAIL DETAILS

08-01-04C

REV	DATE	BY	DESCRIPTION

RECORD DRAWINGS

DESIGNED	CE
DRAWN	CE/RC
CHECKED	CAG
DATE	MAY 2012

DISCIPLINE ENGINEER	** ORIGINAL SEALED BY MICHAEL J. HARTLAUB 12/07/11 C74901 **	
PROJECT ENGINEER	** ORIGINAL SEALED BY DARREN G. BAUNE 12/07/11 C68899 **	
VICE PRESIDENT	** ORIGINAL SEALED BY MICHAEL J. BRITTEN 12/07/11 C27729 **	

carollo

CITY OF TURLOCK INC. 1908

STANISLAUS COUNTY, CALIFORNIA

HARDING DRAIN BYPASS

PUMP STATION AND PIPELINE

TYPICALS

TYPICAL DETAILS ARCHITECTURAL

VERIFY SCALES

BAR IS ONE INCH ON ORIGINAL DRAWING

0 1"

IF NOT ONE INCH ON THIS SHEET, ADJUST SCALES ACCORDINGLY

JOB NO. 6918B.10

DRAWING NO. T-4

SHEET NO. 8 OF 107

Last Saved By: dthung 5-11-12 03:49pm

FILENAME: C:\pw_working\projectwise\alaico\dms60465\T-00T004 8-25-14 04:42pm ALaico XREFS: G-BDR; Mjb; BEH; CA-MJB; CA-DGB; CA-MJH; CA-AEB; CA-GRS; CA-KAM; CA-ALM; CA-ALM_11-30-11; CA-DGB_11-30-11; CA-MJB_11-30-11 Turlck_City_LogoPMS_FNL;

1. STAIRS, WALKING SURFACES AND ROOFS (WHERE EQUIPMENT IS LOCATED <10' FROM ROOF EDGE) ELEVATED >30" ABOVE GRADE OR ADJACENT CONSTRUCTION SHALL BE PROVIDED WITH A 42" HIGH GUARDRAIL FORMING A PROTECTIVE BARRIER. A PARAPET WALL 42" OR MORE IN HEIGHT MAY BE THAT GUARDRAIL AT ROOF LOCATIONS.
2. SEE DRAWINGS OR SPECIFICATIONS FOR GUARDRAIL MATERIAL TYPE(S).
3. HANDRAIL SHALL BE PROVIDED AT BOTH SIDES OF EVERY STAIR HAVING TWO OR MORE RISERS.
4. HANDRAIL SHALL BE CONTINUOUS THE FULL LENGTH OF THE STAIR.
5. HANDRAIL EXTENSIONS SHALL BE PROVIDED AT BOTH SIDES OF STAIRS AND AT TOP AND BOTTOM. HANDRAIL EXTENSION ON STAIR MOUNTED GUARDRAIL MAY BE OMITTED WHERE IT IS PERPENDICULAR TO AND IMPEDES EXIT FLOW.
6. INSIDE HANDRAIL ON SWITCHBACK STAIRS SHALL BE CONTINUOUS.
7. WALL MOUNTED HANDRAILS SHALL BE SINGLE RAIL WITH TOP OF RAIL AT 2'-10" HEIGHT ABOVE LANDINGS OR TREAD NOSINGS, MATCHING RAILING ON OPPOSITE SIDE.
8. ALL GUARDRAIL SHALL BE FIXED UNLESS OTHERWISE INDICATED ON THE DRAWINGS.
9. PLACE CENTER OF EMBEDDED POSTS 4" FROM EDGE OF CONCRETE AND 6" FROM EDGE OF CONCRETE STAIR NOSINGS UNLESS OTHERWISE INDICATED ON THE DRAWINGS.
10. PLACE GUARDRAIL POSTS OPPOSITE EACH OTHER WHERE RAILINGS ARE PARALLEL.
11. FOR GUARDRAIL POSTS MOUNTED TO BEAM OR STAIR CHANNEL, PROVIDE MANUFACTURERS REINFORCED CONNECTION FROM POST TO PLATE. PLATE AND REINFORCED INSERTS SHALL BE ALUMINUM OR STAINLESS STEEL.
12. PROVIDE SLIP JOINTS AT 24' MAX CENTERS FOR EXPANSION OF RAIL AND KICKPLATE. LOCATE RAIL SLIP JOINTS AT FACE OF POST. GAP AT TIME OF INSTALLATION SHALL BE BASED ON TEMPERATURE OF GUARDRAIL (3/8" GAP AT 25°F, 0" GAP AT 100°F). AT CONCRETE EXPANSION JOINTS, PROVIDE MINIMUM OF 1" GAP IN SLIP JOINTS BUT NOT LESS THAN WIDTH OF CONCRETE EXPANSION JOINT. INSERT SLEEVES SHALL BE LONG ENOUGH TO ALLOW FOR THE FULL RANGE OF MOVEMENT.
13. MATERIAL FOR SLIP JOINT PLATE AND KICKPLATE CHANNEL SHALL BE OF THE SAME MATERIAL AS THE GUARDRAIL.
14. ALL JOINTS FOR STAINLESS STEEL GUARDRAIL AND HANDRAIL SHALL BE COPED, WELDED, AND GROUND SMOOTH.
15. PROVIDE KICKPLATE AT ALL LOCATIONS EXCEPT AT SLOPING GUARDRAIL ON STAIRS AND WHERE GUARDRAIL IS MOUNTED ON A 4" MIN CURB. KICKPLATE MAY BE EXTRUDED OR BENT PLATE AND SHALL BE ATTACHED WITH SST BOLTS IN 5/16" x 3/4" SLOTTED HOLES. BOLT KICKPLATE TO POST WITH BOTTOM 1/4" CLEAR FROM FLOOR. FOR SIDE MOUNTED GUARDRAIL, PROVIDE STANDARD SPACER BLOCK BETWEEN POST AND KICKPLATE TO MAINTAIN 1/4" MAX CLEAR SPACING. HAND TIGHTEN AND CENTER PUNCH BOLT TO LOCK. SPLICES SHALL ACCOMMODATE TEMPERATURE EXPANSION PER NOTE 12.
16. COAT ALL SURFACES OF ALUMINUM THAT COME IN CONTACT WITH CONCRETE IN ACCORDANCE WITH SPECIFICATIONS. PLACE NEOPRENE GASKET BETWEEN ALUM AND STEEL.

A340 TYP NS — GUARDRAIL/HANDRAIL NOTES FOR IBC — 08-01-05

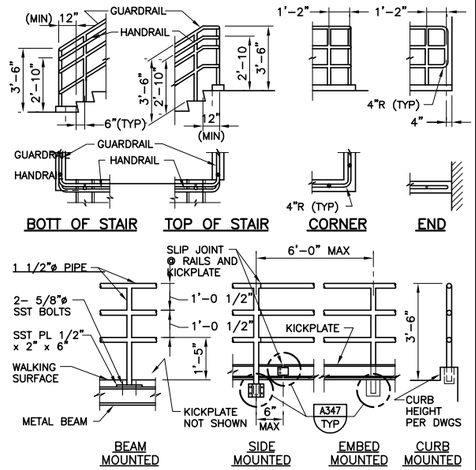

GUARDRAIL ELEVATION

NOTES:
1. THIS DETAIL IS APPLICABLE AT PRIVATE STAIRS WHERE OPERATOR ONLY ACCESSIBILITY IS REQUIRED. DETAILS AND INSTALLATION SHALL COMPLY WITH THE BUILDING CODE.
2. FOR ADDITIONAL REQUIREMENTS, SEE SPECIFICATIONS AND A340 TYP.
3. VARIOUS POST MOUNTING DETAILS ARE ILLUSTRATED. SEE DRAWINGS FOR SPECIFIC MOUNTING REQUIREMENTS.

A343 TYP NS — THREE RAIL GUARDRAIL (PRIVATE) FOR IBC SHEET 1 OF 3 — 03-01-06

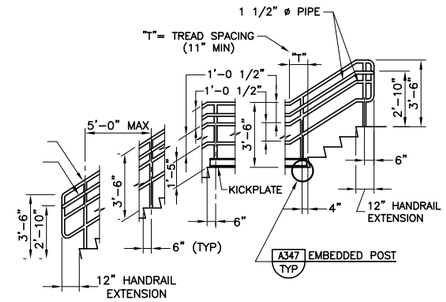

STAIR GUARDRAIL/HANDRAIL ELEVATION

NOTES:
1. SEE SPECIFICATIONS AND A340 TYP FOR ADDITIONAL REQUIREMENTS.
2. HANDRAIL EXTENSIONS ARE REQUIRED ON BOTH SIDES OF STAIR; THEY ARE NOT REQUIRED WHERE HANDRAIL IS CONTINUOUS.

A343 TYP NS — THREE RAIL GUARDRAIL (PRIVATE) FOR IBC SHEET 2 OF 3 — 03-01-06

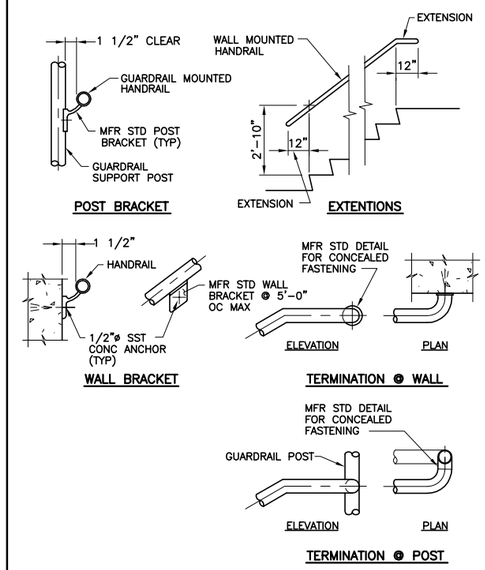

HANDRAIL DETAILS

A343 TYP NS — THREE RAIL GUARDRAIL (PRIVATE) FOR IBC SHEET 3 OF 3 — 03-01-06

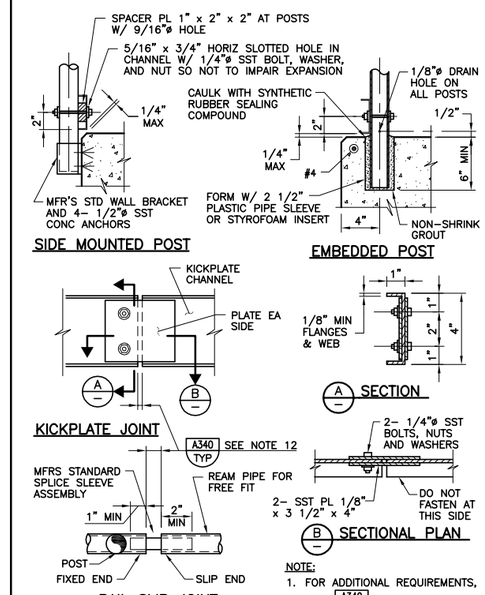

NOTE:
1. FOR ADDITIONAL REQUIREMENTS, SEE A340 TYP.

A347 TYP NS — GUARDRAIL DETAILS FOR IBC — 08-01-05

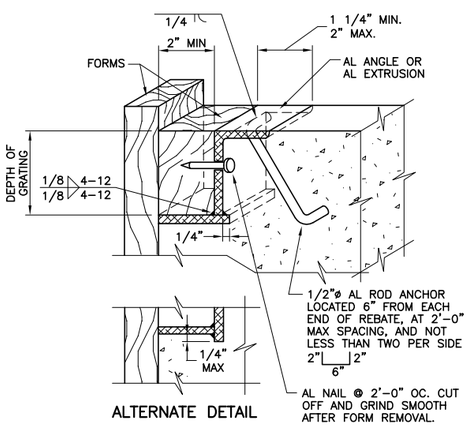

NOTES:
1. FOR GRATING, SEE SPECIFICATIONS.
2. REBATE ANGLE TO BE CONTINUOUS AROUND ENTIRE OPENING.
3. AL ANGLE AND BEARING PLATE SHALL BE 1/4" MIN THICK.
4. REBATE MAY BE EXTRUDED, SUBJECT TO ENGINEER'S ACCEPTANCE.
5. COAT ALL ALUMINUM IN CONTACT WITH CONCRETE PER SPECIFICATIONS.
6. UNLESS OTHERWISE INDICATED ON THE DRAWINGS, ANGLE SHALL BE ALUMINUM FOR ALUMINUM GRATING.

A400 TYP S — ALUMINUM GRATING REBATE — 08-01-04C

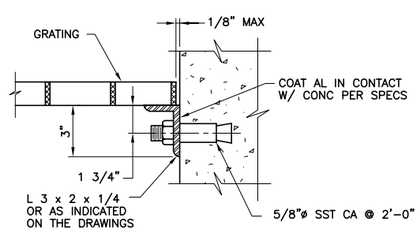

NOTE:
UNLESS OTHERWISE INDICATED ON THE DRAWINGS, ANGLE SHALL BE ALUMINUM FOR ALUMINUM GRATING AND TYPE 304 OR 316 SST FOR FRP GRATING.

A402 TYP S — GRATING SEAT — 08-01-04C

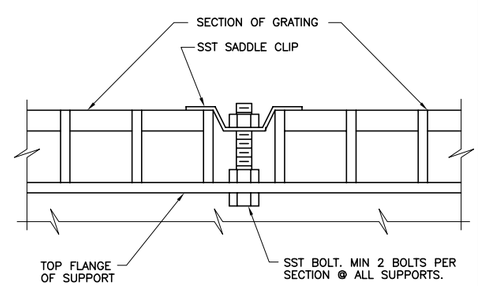

NOTES:
1. GRATING FASTENERS SHALL BE INSTALLED WHERE INDICATED ON THE DRAWINGS.
2. GRATING FASTENERS SHALL BE INSTALLED AT EACH CORNER OF EACH PANEL AND AT SPACING NOT TO EXCEED 8'-0".

A414 TYP S — GRATING FASTENERS — 08-01-04C

REV	DATE	BY	DESCRIPTION
			RECORD DRAWINGS

DESIGNED CE
DRAWN CE/RC
CHECKED CAG
DATE MAY 2012

DISCIPLINE ENGINEER: ** ORIGINAL SEALED BY MICHAEL J. HARTLAUB 12/07/11 C74901 **
PROJECT ENGINEER: ** ORIGINAL SEALED BY DARREN G. BAUNE 12/07/11 C68899 **
VICE PRESIDENT: ** ORIGINAL SEALED BY MICHAEL J. BRITTEN 12/07/11 C27729 **

carollo

CITY OF TURLOCK INC. 1908
STANISLAUS COUNTY, CALIFORNIA

HARDING DRAIN BYPASS
PUMP STATION AND PIPELINE
TYPICALS
TYPICAL DETAILS ARCHITECTURAL

VERIFY SCALES
BAR IS ONE INCH ON ORIGINAL DRAWING
0 1"
IF NOT ONE INCH ON THIS SHEET, ADJUST SCALES ACCORDINGLY

JOB NO. 6918B.10
DRAWING NO. T-5
SHEET NO. 9 OF 107

Last Saved By: dthung 5-29-12 08:59am

FILENAME: C:\pw_working\projectwise\alaico\dms60465\T-00T005 8-25-14 04:43pm ALaico XREFS: G-BDR; Mjb; BEH; CA-MJB; CA-DGB; CA-MJH; CA-AEB; CA-GRS; CA-KAM; CA-ALM; CA-ALM_11-30-11; CA-DGB_11-30-11; CA-MJB_11-30-11 Turlock_City_LogoPMS_FNL;

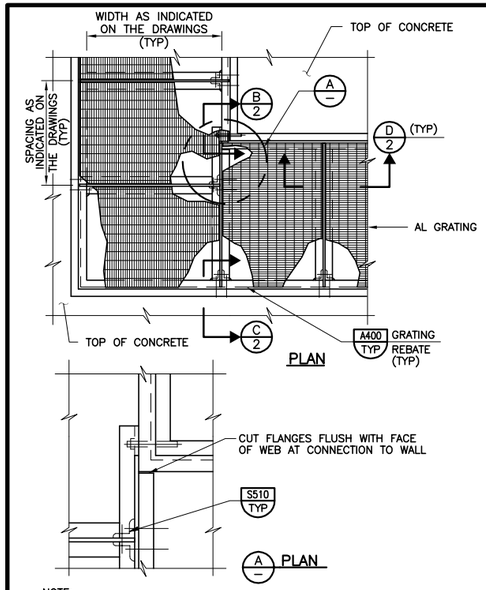

NOTE:
1. COAT ALUMINUM SURFACES IN CONTACT WITH CONCRETE AS SPECIFIED

A409 TYP N SUPPORTS FOR ALUMINUM GRATING, LONG SPAN SHEET 1 OF 2 03/16/09

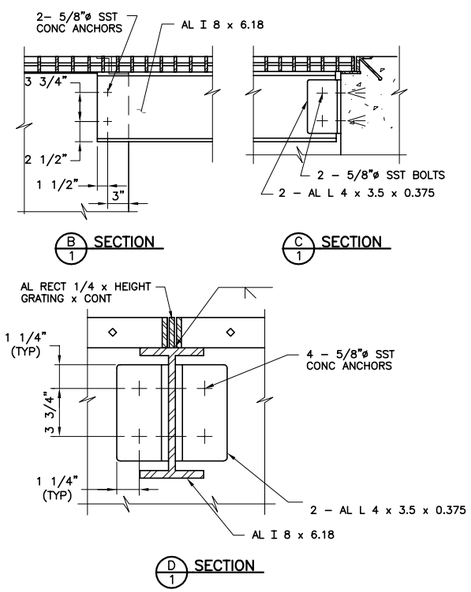

A409 TYP N SUPPORTS FOR ALUMINUM GRATING, LONG SPAN SHEET 2 OF 2 03/16/09

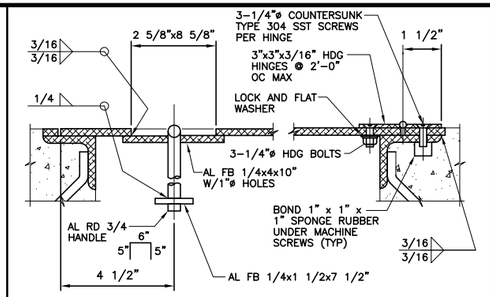

HINGE & HANDLE DETAIL

THICKNESS OF TREAD PLATE "T" (INCH)						
LIVE LOAD (PSF)	SHORTER SPAN "L" (FT–IN)					
	12"	1'–6"	2'–0"	2'–6"	3'–0"	5'–0"
100	3/16	1/4	3/8	1/2	1/2	3/8*
150	1/4	3/8	1/2	1/2	3/8*	3/8*
200	1/4	3/8	1/2	3/8*	3/8*	3/8*
250	1/4	3/8	1/2	3/8*	3/8*	3/8*
300	1/4	3/8	1/2	3/8*	3/8*	3/8*
350	3/8	1/2	3/8*	3/8*	3/8*	3/8*
400	3/8	1/2	3/8*	3/8*	3/8*	3/8*

SCHEDULE FOR TREAD PLATE

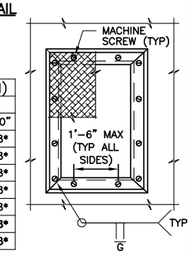

SEAT PLAN

NOTE:
1. * 3/8" PLATE W/ AL T3.00x3.00x2.55 STIFFENERS. SEE A/3, A/3 AND A/3.

A500 TYP NS ALUMINUM TREAD PLATE SHEET 1 OF 3 07/31/09

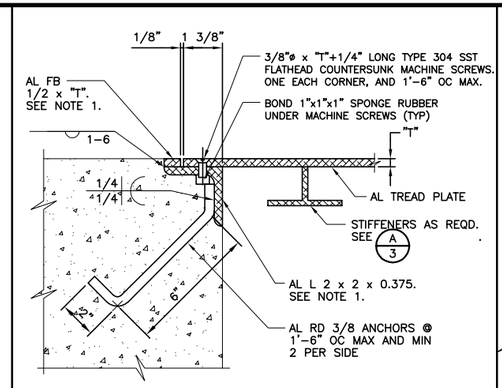

SECTION – REBATE

NOTES:
1. ALUMINUM ANGLE AND BAR MAY BE EXTRUDED.
2. COAT ALUMINUM SURFACE IN CONTACT WITH CONCRETE AS SPECIFIED.
3. OMIT PERIMETER MACHINE SCREWS WHERE HINGE IS INDICATED ON THE DRAWINGS.
4. HINGE AND HANDLE DETAIL SHALL APPLY WHERE INDICATED ON THE DRAWINGS.
5. TREAD PLATE LIVE LOAD SHALL BE SAME AS FLOOR LIVE LOAD.
6. TREAD PLATE SHALL BE FABRICATED IN UNITS THAT DO NOT WEIGH MORE THAB 75 POUNDS.

A500 TYP NS ALUMINUM TREAD PLATE SHEET 2 OF 3 07/31/08

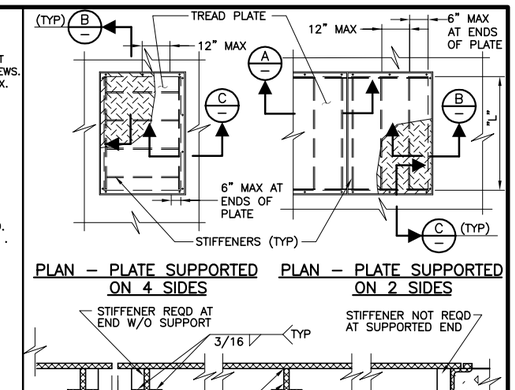

A500 TYP NS ALUMINUM TREAD PLATE SHEET 3 OF 3 07/31/08

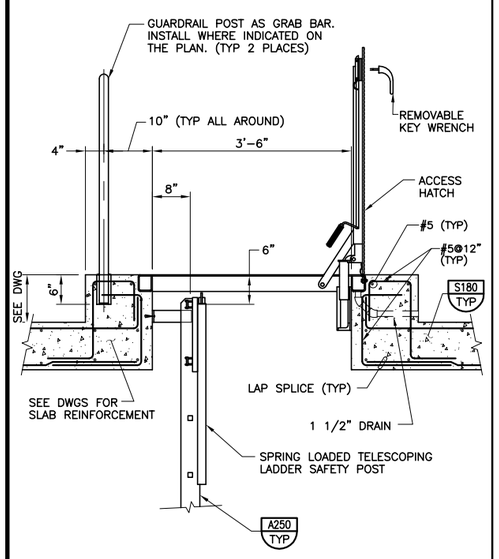

A506 TYP HATCH ON CURB WITH LADDER 08–01–04C

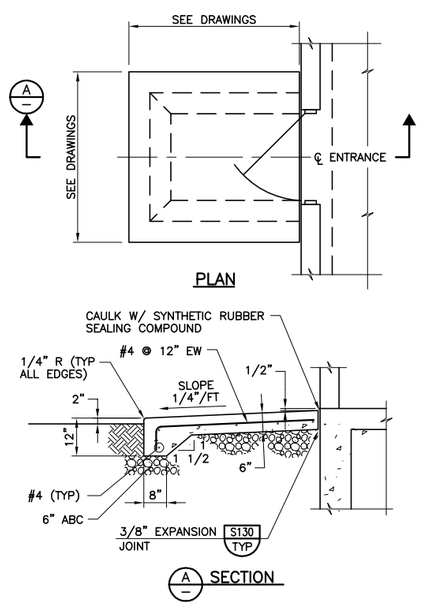

A802 TYP ENTRANCE PAD 08–01–04C

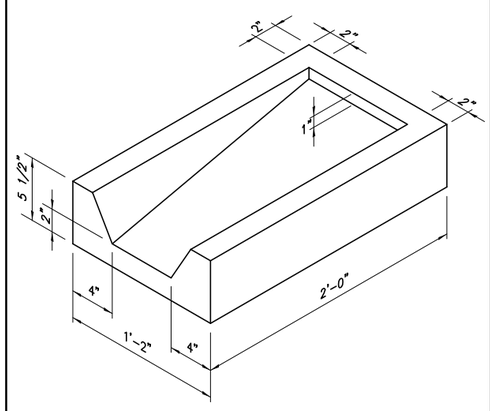

NOTES:
1. INSTALL AT ALL BUILDING DOWNSPOUTS.

A804 TYP CONCRETE SPLASH BLOCK 08–01–04C

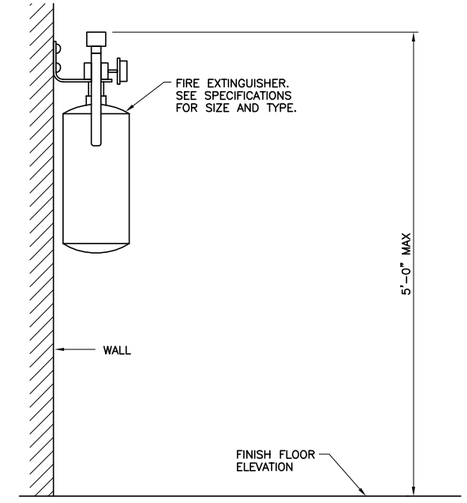

NOTES:
1. MOUNT TO WALL WITH NUMBER AND SIZE OF ANCHORS TO MATCH BRACKET. USE CONCRETE ANCHORS FOR MASONRY OR CONCRETE WALLS. INSTALL AT GROUTED MASONRY CELL. MOUNT TO STUD WITH LAG BOLTS, OR WOOD SCREWS FOR WOOD PARTITION WALL.
2. PROVED A PLASTIC RED BACKING PLATE WITH THE WORDS 'FIRE EXTINGUISHER' ON THE WALL BEHIND THE EXTINGUISHER.

A830 TYP FIRE EXTINGUISHER 08–01–04C

REV	DATE	BY	DESCRIPTION
			RECORD DRAWINGS

DESIGNED CE
DRAWN CE/RC
CHECKED CAG
DATE MAY 2012

DISCIPLINE ENGINEER: ** ORIGINAL SEALED BY MICHAEL J. HARTLAUB 12/07/11 C74901 **
PROJECT ENGINEER: ** ORIGINAL SEALED BY DARREN G. BAUNE 12/07/11 C68899 **
VICE PRESIDENT: ** ORIGINAL SEALED BY MICHAEL J. BRITTEN 12/07/11 C27729 **

carollo

CITY OF TURLOCK INC. 1908
STANISLAUS COUNTY, CALIFORNIA

HARDING DRAIN BYPASS
PUMP STATION AND PIPELINE
TYPICALS
TYPICAL DETAILS ARCHITECTURAL

VERIFY SCALES
BAR IS ONE INCH ON ORIGINAL DRAWING
0 1"
IF NOT ONE INCH ON THIS SHEET, ADJUST SCALES ACCORDINGLY

JOB NO. 6918B.10
DRAWING NO. T–6
SHEET NO. 10 OF 107

Last Saved By: ALaico 5–20–14 01:20pm

FILENAME: C:\pw_working\projectwise\alaico\dms60465\T-00T006 8-25-14 04:43pm ALaico XREFS: G-BDR; Mjb; BEH; CA-MJB; CA-DGB; CA-MJH; CA-AEB; CA-GRS; CA-KAM; CA-ALM; CA-ALM_11-30-11; CA-DGB_11-30-11; CA-MJB_11-30-11 Turlock_City_LogoPMS_FNL;

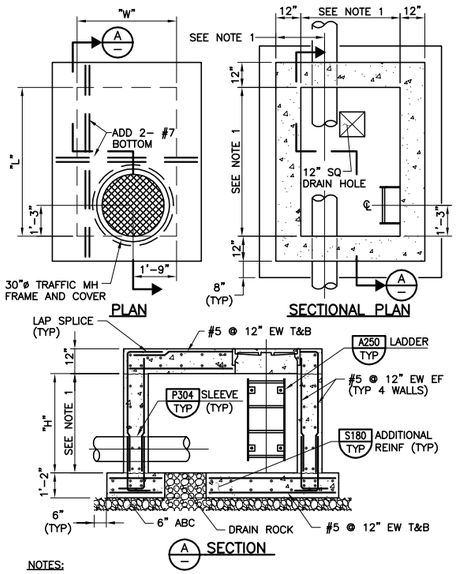

NOTES:

1. SEE DRAWINGS FOR DIMENSION.
2. MAX DIMENSIONS: "L" = 7'–0", "H" = 7'–0" AND "W" = 7'–0".

C005 TYP N — VALVE OR METER VAULT — 08–01–05

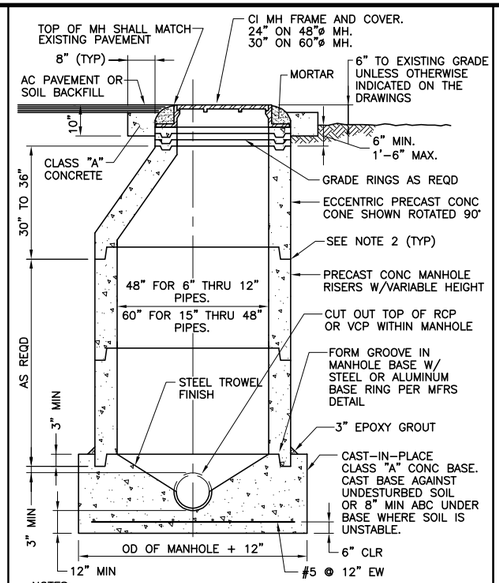

NOTES:

1. LOCATE MANHOLE COVER ON DOWNSTREAM SIDE OF MANHOLE. SET MANHOLE FRAME IN GROUT.
2. SEAL JOINT WITH PRECAST CONCRETE JOINT SEALANT.

C010 TYP N — MANHOLE — 08–01–04C

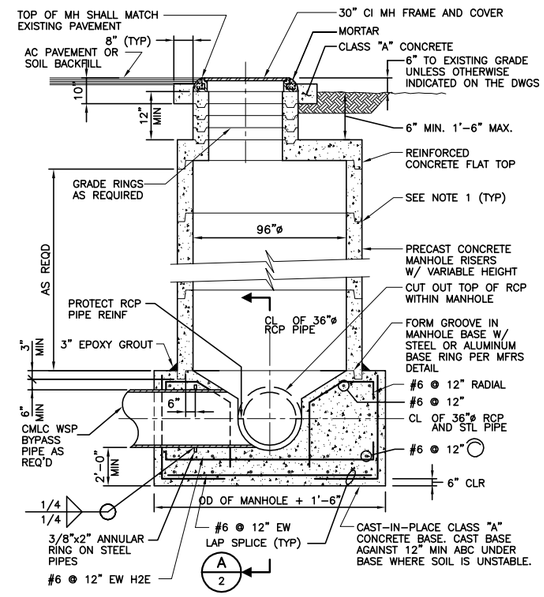

C016 TYP R — MINIMUM COVER CONDITION MANHOLE — SHEET 1 OF 2 — 02/03/12

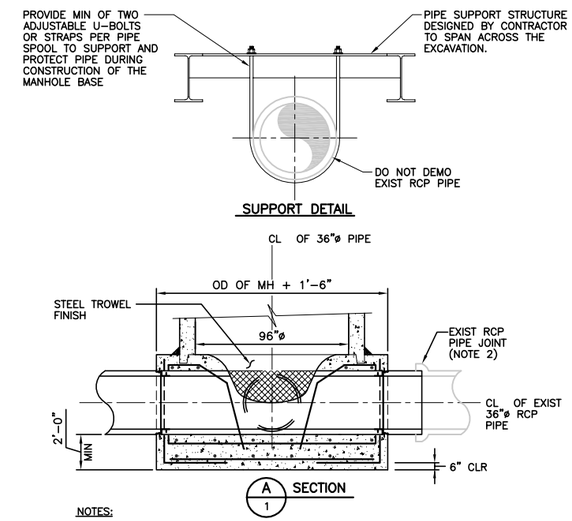

NOTES:

1. SEAL JOINTS WITH PRECAST CONCRETE JOINT SEALANT.
2. POTHOLE AND VERIFY LOCATION OF JOINTS IN THE EXISTING RCP PIPE, DEMOLISH THE EXISTING RCP PIPE BACK TO CLOSES EXISTING JOINT AND REPLACE WITH NEW RCP PIPE.

C016 TYP R — MINIMUM COVER CONDTION MANHOLE — SHEET 2 OF 2 — 02/03/12

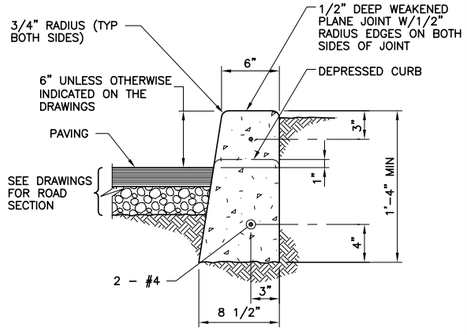

NOTES:

1. CURB SHALL BE FINISHED ON TOP, 8" DOWN FRONT FACE, AND 2" DOWN BACK.
2. EXPANSION JOINTS SHALL BE PLACED AT END OF CONCRETE PLACEMENT, AT POINTS OF CURVATURE, BOTH SIDES OF DRIVEWAYS AND WALKWAYS, CURB RETURNS, STRUCTURES, AND AT MAXIMUM DISTANCE OF 30 FEET. EXPANSION JOINTS SHALL BE 3/4" THICK W/ 1/4" RADIUS EDGES AT BOTH SIDES OF JOINT. USE BITUMINOUS EXPANSION JOINT MATERIAL.
3. REINFORCING STEEL SHALL NOT PASS THROUGH EXPANSION JOINTS.
4. WEAKENED PLANE JOINTS SHALL BE INSTALLED AT 15 FEET OC.
5. CURB SHALL BE DEPRESSED FOR DRIVEWAYS, ROADWAYS, SIDEWALKS FOR HANDICAPPED ACCESS, AND WHERE INDICATED ON THE DRAWINGS.

C100 TYP — YARD CURBING — 08–01–04C

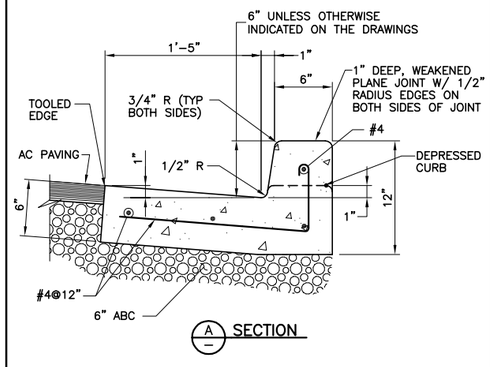

NOTES:

1. CURB SHALL BE FINISHED ON TOP, 8" DOWN FRONT FACE AND 2" DOWN BACK.
2. EXPANSION JOINTS SHALL BE PLACED AT END OF CONCRETE PLACEMENT, AT POINTS OF CURVATURE, BOTH SIDES OF DRIVEWAYS AND WALKWAYS, CURB RETURNS, STRUCTURES AND AT MAXIMUM DISTANCE OF 30 FEET. EXPANSION JOINTS SHALL BE 3/4" THICK W/ 1/4" RADIUS EDGES AT BOTH SIDES OF JOINT. USE BITUMINOUS EXPANSION JOINT MATERIAL.
3. REINFORCING STEEL SHALL NOT PASS THROUGH EXPANSION JOINTS.
4. WEAKENED PLANE JOINTS SHALL BE INSTALLED AT 15 FEET OC.
5. CURB SHALL BE DEPRESSED FOR DRIVEWAYS, ROADWAYS, SIDEWALKS FOR HANDICAPPED ACCESS, AND WHERE INDICATED ON THE DRAWINGS.

C102 TYP — YARD CURB AND GUTTER — 08–01–04C

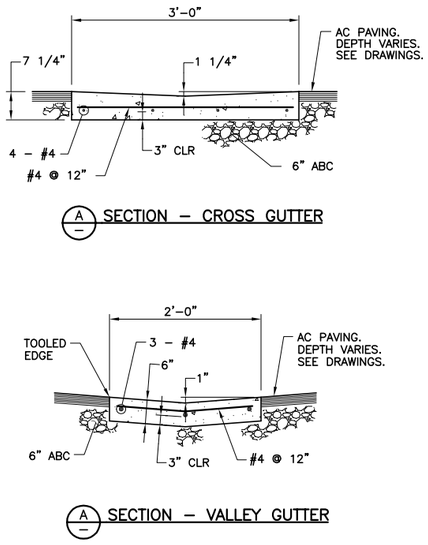

C104 TYP — CROSS GUTTER AND VALLEY GUTTER — 08–01–04C

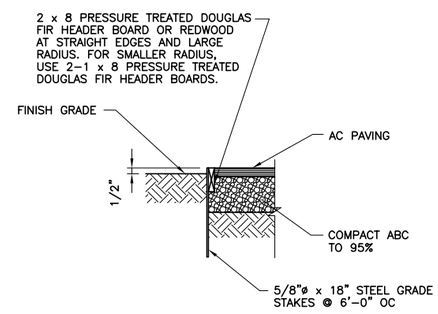

C130 TYP — WOOD HEADER — 08–01–04C

REV	DATE	BY	DESCRIPTION

RECORD DRAWINGS

DESIGNED CE
DRAWN CE/RC
CHECKED CAG
DATE MAY 2012

DISCIPLINE ENGINEER: ** ORIGINAL SEALED BY MICHAEL J. HARTLAUB 12/07/11 C74901 **
PROJECT ENGINEER: ** ORIGINAL SEALED BY DARREN G. BAUNE 12/07/11 C68899 **
VICE PRESIDENT: ** ORIGINAL SEALED BY MICHAEL J. BRITTEN 12/07/11 C27729 **

carollo

CITY OF TURLOCK INC. 1908
STANISLAUS COUNTY, CALIFORNIA

HARDING DRAIN BYPASS
PUMP STATION AND PIPELINE
TYPICALS
TYPICAL DETAILS
CIVIL

VERIFY SCALES
BAR IS ONE INCH ON ORIGINAL DRAWING
0 — 1"
IF NOT ONE INCH ON THIS SHEET, ADJUST SCALES ACCORDINGLY

JOB NO. 6918B.10
DRAWING NO. T–7
SHEET NO. 11 OF 107

Last Saved By: Alaico 4–18–14 03:20pm

FILENAME: C:\pw_working\projectwise\alaico\dms60465\T–00T007 8–25–14 04:43pm ALaico XREFS: G–BDR; Mjb; BEH; CA–MJB; CA–DGB; CA–MJH; CA–AEB; CA–GRS; CA–KAM; CA–ALM; CA–ALM_11–30–11; CA–DGB_11–30–11; CA–MJB_11–30–11 Turlck_City_LogoPMS_FNL;

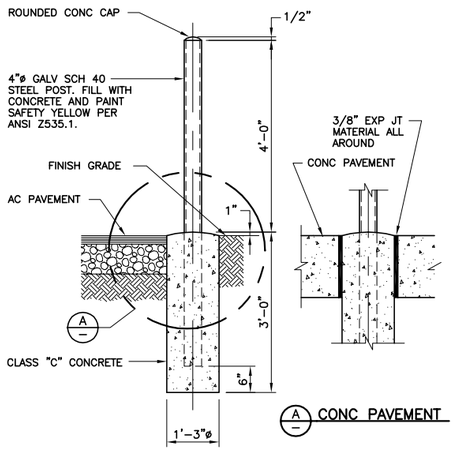

AC PAVEMENT AND FINISH GRADE

C160 TYP N GUARD POST 08-01-05

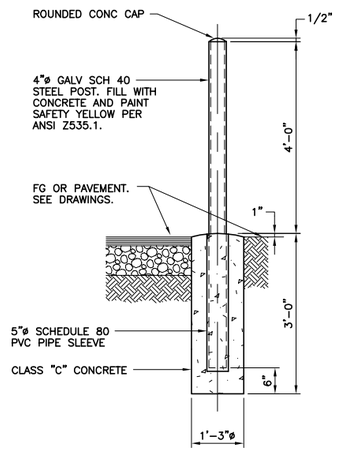

NOTE:

1. PROVIDE 3/8" EJ MATERIAL WHERE INSTALLED IN CONC PAVING.

C161 TYP N REMOVABLE GUARD POST 08-01-05

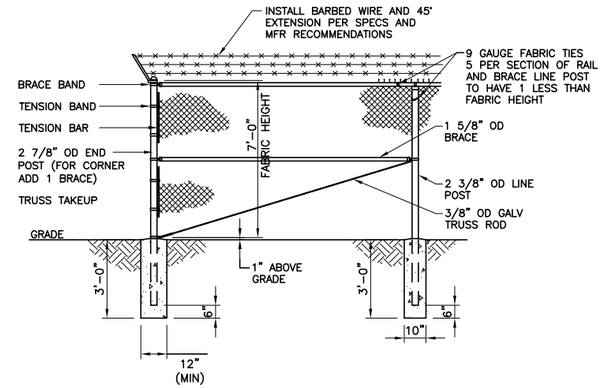

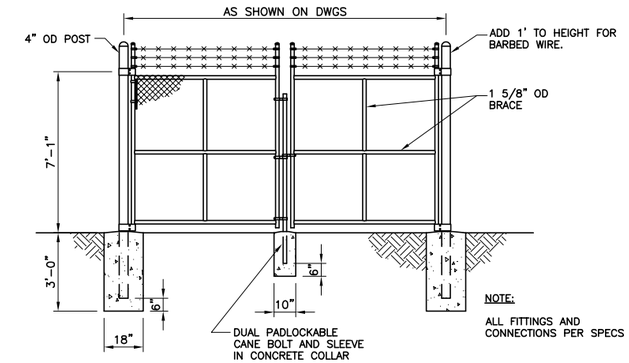

NOTE:

ALL FITTINGS AND CONNECTIONS PER SPECS

C190 TYP J CHAIN LINK FENCE AND GATE DETAIL 01-24-08

REV	DATE	BY	DESCRIPTION

RECORD DRAWINGS

DESIGNED CE
DRAWN CE/RC
CHECKED CAG
DATE MAY 2012

DISCIPLINE ENGINEER: ** ORIGINAL SEALED BY MICHAEL J. HARTLAUB 12/07/11 C74901 **

PROJECT ENGINEER: ** ORIGINAL SEALED BY DARREN G. BAUNE 12/07/11 C68899 **

VICE PRESIDENT: ** ORIGINAL SEALED BY MICHAEL J. BRITTEN 12/07/11 C27729 **

carollo

CITY OF TURLOCK INC. 1908

STANISLAUS COUNTY, CALIFORNIA

HARDING DRAIN BYPASS
PUMP STATION AND PIPELINE
TYPICALS
TYPICAL DETAILS
CIVIL II

VERIFY SCALES
BAR IS ONE INCH ON ORIGINAL DRAWING
0 1"
IF NOT ONE INCH ON THIS SHEET, ADJUST SCALES ACCORDINGLY

JOB NO. 6918B.10
DRAWING NO. T-7A
SHEET NO. 11A OF 107

FILENAME: C:\pw_working\projectwise\alaico\dms60465\T-00T007A 8-25-14 04:44pm ALaico XREFS: G-BDR; Mjb; BEH; CA-MJB; CA-DGB; CA-MJH; CA-AEB; CA-GRS; CA-KAM; CA-ALM; CA-ALM_11-30-11; CA-DGB_11-30-11; CA-MJB_11-30-11 Turlck_City_LogoPMS_FNL;

Last Saved By: ALaico 5-28-14 04:15pm

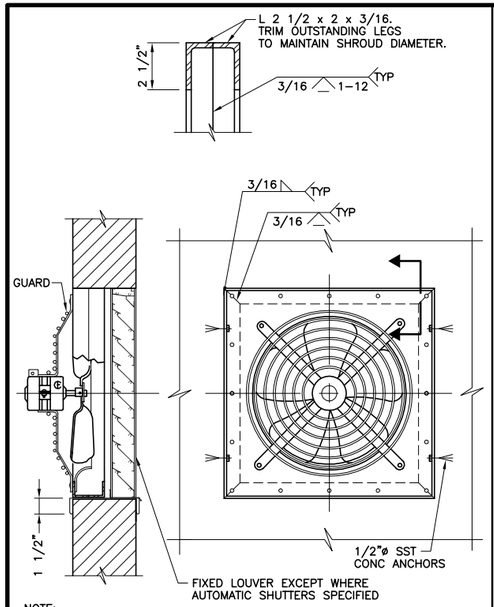

NOTE:

1. INSTALL AL INSECT SCREEN ON INTERIOR OF LOUVER FOR SUPPLY FANS.

H001 TYP PROPELLER FAN
08-01-04C

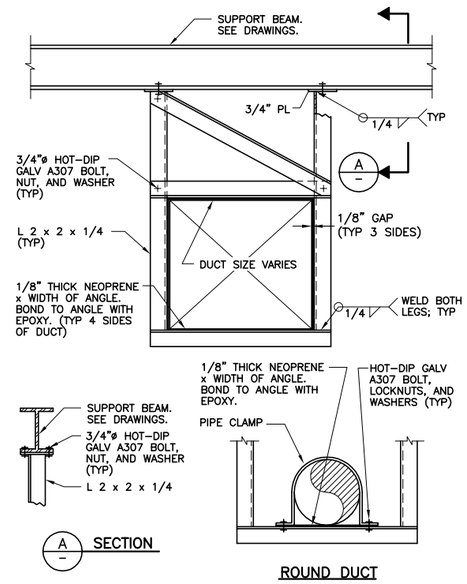

H121 TYP AIR DUCT SUPPORT FOR METAL DECK
07-31-08

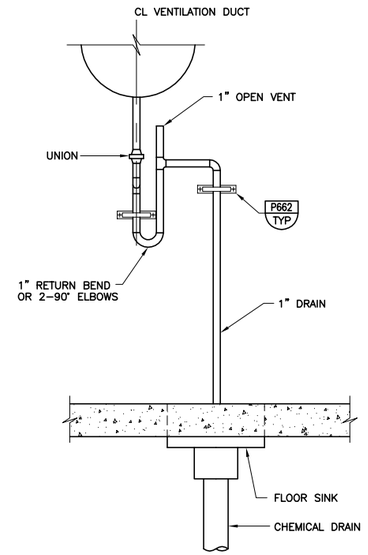

H220 TYP VENTILATION DUCT FOR CONDENSATE TRAP AND CLEANOUT
08-01-05

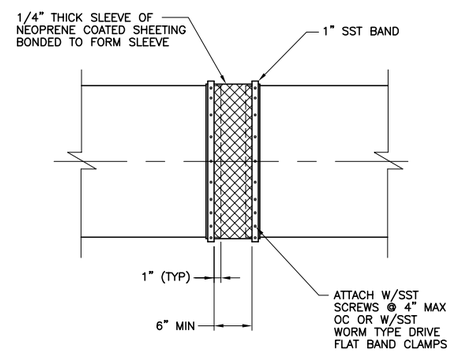

H230 TYP FLEXIBLE CONNECTION FOR METAL DUCTS
08-01-04C

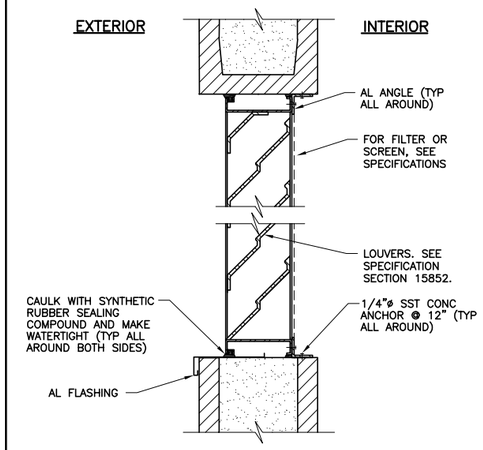

NOTE:

1. ALL FITTINGS FOR ATTACHING LOUVERS SHALL BE TYPE 316 SST.

H250 TYP FIXED WALL LOUVER
08-01-04C

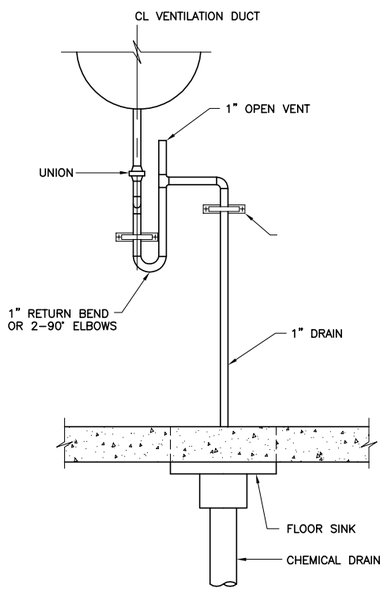

H220 TYP VENTILATION DUCT FOR CONDENSATE TRAP AND CLEANOUT
08-01-05

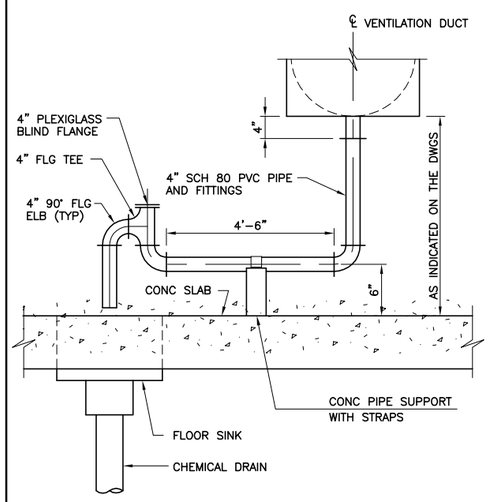

H222 TYP CONDENSATE TRAP AND CLEANOUT FOR VENTILATION DUCT
08-01-05

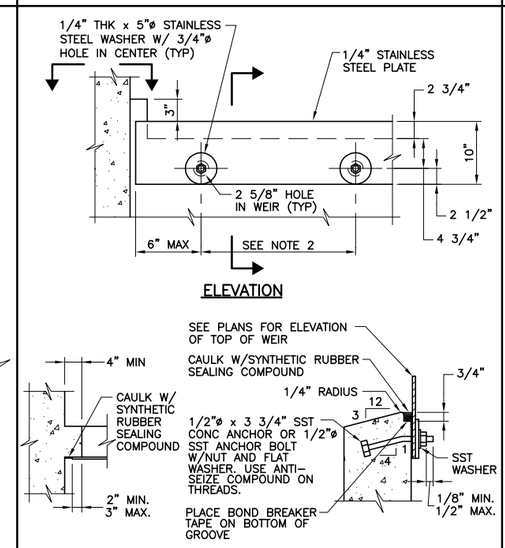

NOTES:

1. ALL EDGES, VOIDS, AND SPLICES SHALL BE SEALED WATER TIGHT W/ SYNTHETIC RUBBER SEALING COMPOUND.
2. ANCHOR BOLT SPACING = 12" OC FOR STRAIGHT WEIRS AND 2'-0" OC FOR CIRCULAR WEIRS.

M214 TYP S PLAIN WEIR
08-01-04C

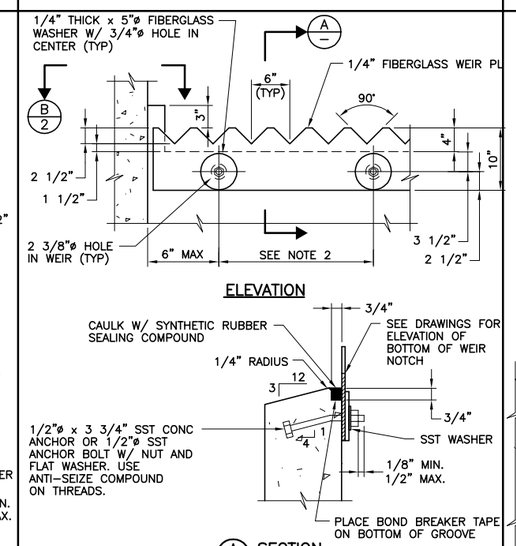

NOTES:

1. ALL EDGES, VOIDS, AND SPLICES SHALL BE SEALED WATER TIGHT WITH SYNTHETIC RUBBER SEALING COMPOUND.
2. ANCHOR BOLT SPACING = 12" OC FOR STRAIGHT WEIRS AND 2'-0" OC FOR CIRCULAR WEIRS.

M216 TYP S V-NOTCHED WEIR
SHEET 1 OF 2 04-30-07

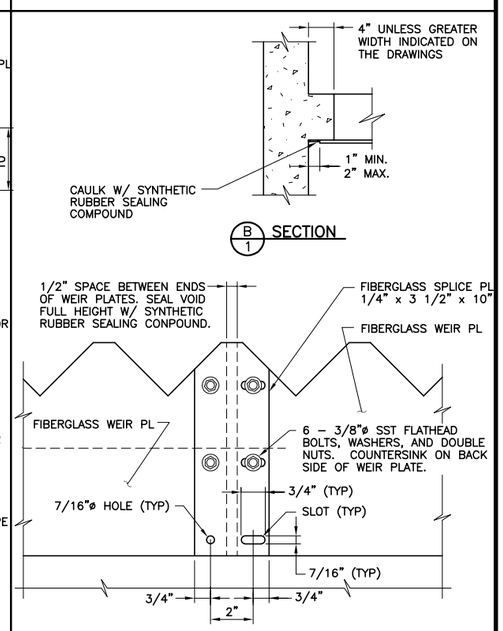

M216 TYP S V-NOTCHED WEIR
SHEET 2 OF 2 04-30-07

REV	DATE	BY	DESCRIPTION
			RECORD DRAWINGS

DESIGNED CE
DRAWN CE/RC
CHECKED CAG
DATE MAY 2012

DISCIPLINE ENGINEER: ** ORIGINAL SEALED BY MICHAEL J. HARTLAUB 12/07/11 C74901 **
PROJECT ENGINEER: ** ORIGINAL SEALED BY DARREN G. BAUNE 12/07/11 C68899 **
VICE PRESIDENT: ** ORIGINAL SEALED BY MICHAEL J. BRITTEN 12/07/11 C27729 **

carollo

CITY OF TURLOCK INC. 1908

STANISLAUS COUNTY, CALIFORNIA

HARDING DRAIN BYPASS
PUMP STATION AND PIPELINE
TYPICALS
TYPICAL DETAILS
HVAC/MECHANICAL

VERIFY SCALES
BAR IS ONE INCH ON ORIGINAL DRAWING
0 1"
IF NOT ONE INCH ON THIS SHEET, ADJUST SCALES ACCORDINGLY

JOB NO. 6918B.10
DRAWING NO. T-8
SHEET NO. 12 OF 107

Last Saved By: ALaico 4-18-14 03:24pm

FILENAME: C:\pw_working\projectwise\alaico\dms60465\T-00T008 8-25-14 04:44pm ALaico XREFS: G-BDR; Mjb; BEH; CA-MJB; CA-DGB; CA-MJH; CA-AEB; CA-GRS; CA-KAM; CA-ALM; CA-ALM_11-30-11; CA-DGB_11-30-11; CA-MJB_11-30-11 Turlock_City_LogoPMS_FNL;

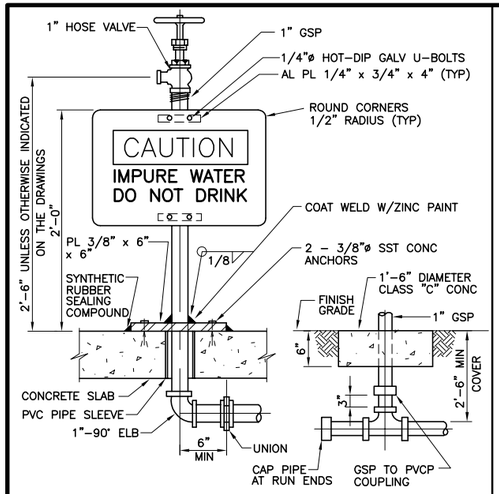

NOTES:

1. SIGN SHALL BE 3/8" THICK PLASTIC RESISTANT TO SUNLIGHT (ULTRAVIOLET) DETERIORATION.
2. SIGN SHALL BE 7" x 10" AND SHALL CONFORM TO THE SPECIFICATIONS.
3. SIGN AS SHOWN IS ROTATED 90° OFF TRUE POSITION. SIGN SHALL BE MOUNTED TO PERMIT EASY READING.
4. INSTALL HOSE RACK, M280 TYP, AT EACH HOSE VALVE.

M276 TYP — 1" HOSE VALVE AND SIGN

NS 08-01-04C

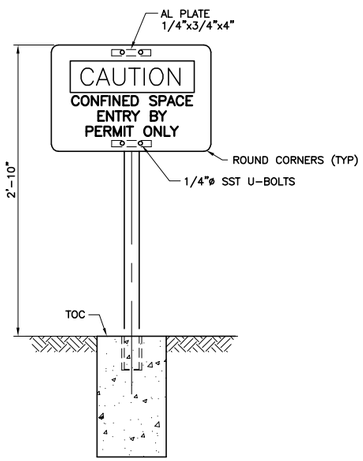

NOTES:

1. SIGN SHALL BE ALUMINUM 10"x14" MINIMUM, ROUND ALL EDGES SMOOTH.
2. SIGN SHALL BE INSTALLED NO FURTHER THAN 3'-0" FROM MANHOLE ON POST. POST SHALL BE TS 3x3x0.1875x4'-0" HOT DIP GALVANIZE, AND SHALL BE SET IN CONCRETE 12"ø x 24" DEEP.

M277 TYP — CONFINED SPACED SIGN

NJ

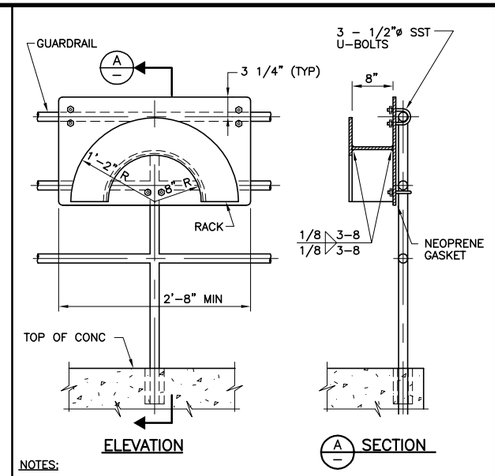

NOTES:

1. HOSE RACK SHALL BE FABRICATED FROM 3/16" ALUMINUM PLATE. ROUND ALL EDGES SMOOTH.
2. GUARDRAIL INSTALLATION SHOWN.
3. HOSE RACKS INSTALLED IN YARD LOCATIONS SHALL BE MOUNTED ON POST. THE POST SHALL BE TS 3 x 3 x 0.1875 x 4'-0" HOT-DIP GALVANIZED AND SHALL BE SET IN CONCRETE 18"ø x 18" DEEP. WELD CAP ON TOP OF POST.
4. HOSE RACKS INSTALLED IN STRUCTURES SHALL BE WALL MOUNTED. FASTEN RACK TO WALL WITH 2- 5/8"ø SST CONCRETE ANCHORS. FOR MASONRY WALLS, FASTEN TO GROUTED CELLS.

M280 TYP — HOSE RACK

S 08-01-04C

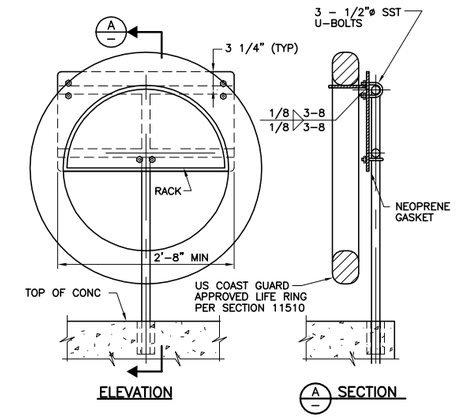

NOTES:

1. RACK SHALL BE FABRICATED FROM 3/16" ALUMINUM PLATE. ROUND ALL EDGES SMOOTH.
2. RACKS INSTALLED IN YARD LOCATIONS SHALL BE MOUNTED ON POST. THE POST SHALL BE TS 3 x 3 x 0.1875 x 4'-0" HOT-DIP GALVANIZED AND SHALL BE SET IN CONCRETE 18"ø x 18" DEEP. WELD CAP ON TOP OF POST.

M281 TYP — LIFE PRESERVER WITH RACK

NJ

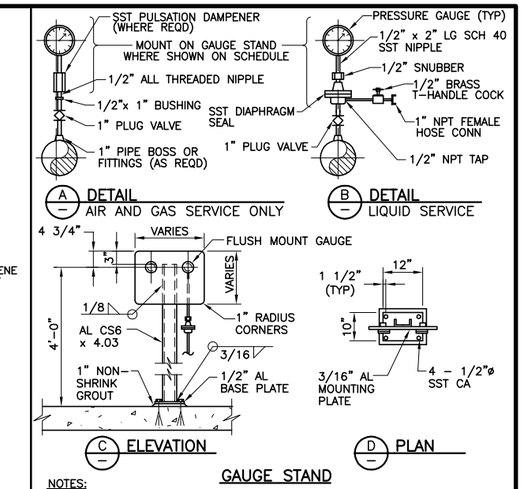

GAUGE STAND

NOTES:

1. ALL GAUGES SHALL BE DUAL SCALE. SCALES ON THE GAUGE FACE SHALL BE MARKED IN PSIG AND FEET OF WATER (FOR POSITIVE READINGS) OR INCHES OF MERCURY (FOR VACUUM READINGS).
2. MOUNTING PLATE DIMENSIONS VARY ACCORDING TO SIZE AND NUMBER OF GAUGES REQUIRED.
3. AT GAUGE STAND, DIAPHRAGM SHALL BE LOCATED BELOW THE MOUNTING PLATE. ONE INCH PIPE SHALL BE ROUTED BETWEEN DIAPHRAGM AND SERVICE PIPE PLUG VALVE. CROSSES WITH THREADED PLUGS SHALL BE USED IN LIEU OF 90° ELBOWS, WITH AT LEAST ONE UNION PER CROSS.
4. COAT ALUMINUM IN CONTACT WITH CONCRETE PER SPECIFICATIONS.

M294 TYP — PRESSURE GAUGE DETAILS

S 08-01-04C

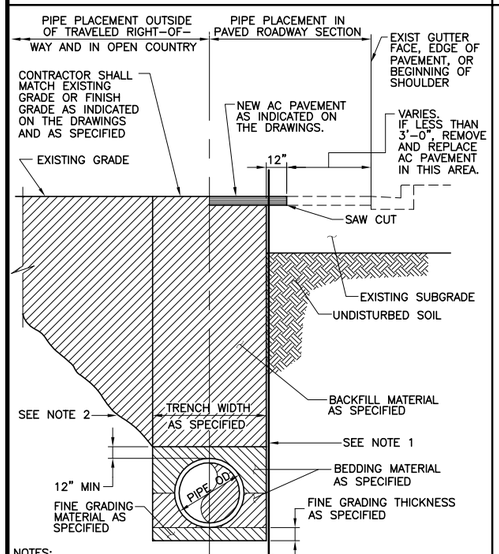

NOTES:

1. TRENCH SHORING IS REQUIRED FOR 36" FE PIPE INSTALLATION FROM STA 10+50.06 TO STA 305+00. SEE SPECIFICATIONS FOR SHORING REQUIREMENTS. ALL OTHER PIPING INSTALLATIONS SHALL MEET REQUIREMENTS OF THE SPECIFICATIONS.
2. SEE SPECIFICATIONS FOR SLOPING REQUIREMENTS.
3. SEE DWG P-25 DETAIL B FOR REPAIR REQUIREMENTS WITHIN HARDING ROAD.

P002 TYP — PIPE INSTALLATION AND PAVEMENT REPLACEMENT SHEET 1 OF 2

J 08-27-08

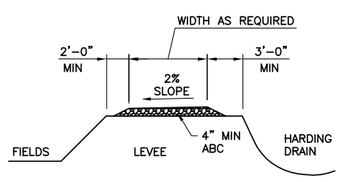

TYPICAL HARDING ROAD SECTION

(CROWS LANDING RD TO PRAIRIE FLOWER RD)

P002 TYP — PIPE INSTALLATION AND PAVEMENT REPLACEMENT SHEET 2 OF 2

J 04-18-14

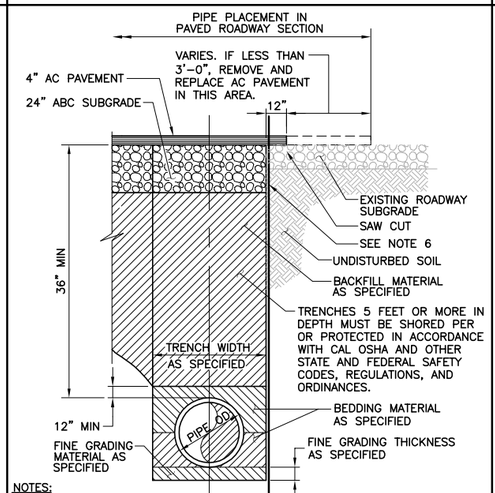

NOTES:

1. PROVIDE 95% COMPACTION IN 8" LAYERS FOR THE ENTIRE DEPTH OF TRENCH.
2. PONDING OR JETTING WILL NOT BE ALLOWED.
3. COMPACTION TESTS SHALL BE PERFORMED BY CONTRACTOR AND BE SUBMITTED TO (AND APPROVED) BY COUNTY INSPECTOR PRIOR TO PAVING, USING CALTRANTS TEST METHOD NO. 216 AND NO. 231.
4. IF SOIL R-VALUE IS LESS THAN 50, USE CLASS 2 AB VERSUS NATIVE MATERIAL.
5. R-VALUE TEST REPORTS MUST BE PROVIDED AT TRENCH LOCATIONS.
6. TRENCH SHORING IS REQUIRED FOR 36" FE PIPE INSTALLATION FROM STA 10+50.06 TO STA 305+00. SEE SPECIFICATIONS FOR SHORING REQUIREMENTS. ALL OTHER PIPING INSTALLATIONS SHALL MEET REQUIREMENTS OF THE SPECIFICATIONS.
7. THIS DETAIL APPLIES AT CARPENTER ROAD, CENTRAL AVENUE, MOFFETT ROAD, MITCHELL ROAD AND PRARIE FLOWER ROAD.

P003 TYP — PIPE INSTALLATION AND PAVEMENT REPLACEMENT FOR COUNTY ROAD CROSSINGS

J 02-07-12

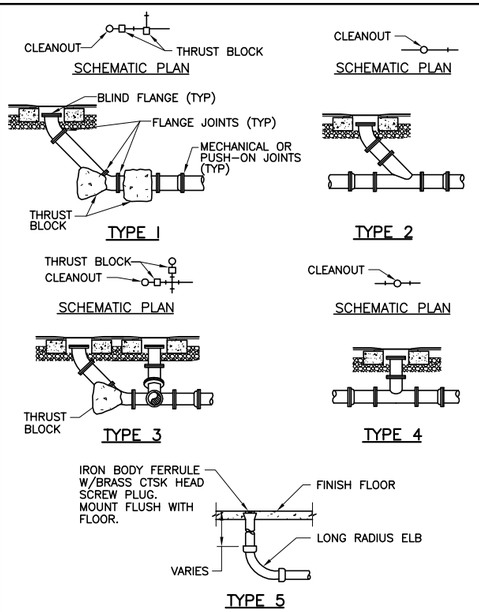

P004 TYP — CLEANOUTS SHEET 1 OF 2

S 08-01-04C

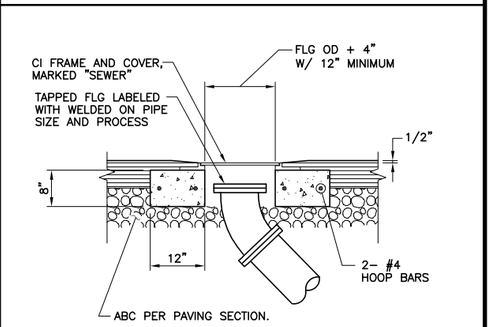

TERMINATION IN PAVEMENT
ALL TYPES FOR 4"ø TO 12"ø

NOTES:

1. ALL THRUST BLOCKS SHALL BE PLACED PER P102 TYP.
2. CONCRETE RING SHALL BE PLACED AFTER PAVEMENT PLACEMENT.
3. ALL FLANGES CAST IN CONCRETE SHALL BE TAPPED TO ALLOW THE INSTALLATION OF BLIND FLANGES WITH CAP SCREWS.
4. CLEANOUT PIPE SHALL BE SAME SIZE AS LINE PIPE.
5. FOR CLEANOUTS IN YARD AREA, PLACE 12" SQUARE BY 4" THICK CONC PAD.

P004 TYP — CLEANOUTS SHEET 2 OF 2

S 08-01-04C

REV	DATE	BY	DESCRIPTION
			RECORD DRAWINGS

DESIGNED	CE
DRAWN	CE/RC
CHECKED	CAG
DATE	MAY 2012

DISCIPLINE ENGINEER: ** ORIGINAL SEALED BY MICHAEL J. HARTLAUB 12/07/11 C74901 **

PROJECT ENGINEER: ** ORIGINAL SEALED BY DARREN G. BAUNE 12/07/11 C68899 **

VICE PRESIDENT: ** ORIGINAL SEALED BY MICHAEL J. BRITTEN 12/07/11 C27729 **

carollo

CITY OF TURLOCK INC. 1908

STANISLAUS COUNTY, CALIFORNIA

HARDING DRAIN BYPASS

PUMP STATION AND PIPELINE

TYPICALS

TYPICAL DETAILS
MECHANICAL AND PIPING

VERIFY SCALES: BAR IS ONE INCH ON ORIGINAL DRAWING 0 — 1"; IF NOT ONE INCH ON THIS SHEET, ADJUST SCALES ACCORDINGLY

JOB NO. 6918B.10

DRAWING NO. T-8A

SHEET NO. 12A OF 107

Last Saved By: ALaico 4-18-14 03:34pm

FILENAME: C:\pw_working\projectwise\alaico\dms60465\T-00T008A 8-25-14 04:45pm ALaico XREFS: G-BDR; Mjb; BEH; CA-MJB; CA-DGB; CA-MJH; CA-AEB; CA-GRS; CA-KAM; S-02Y211b; CA-ALM; CA-ALM_11-30-11; CA-DGB_11-30-11; CA-MJB_11-30-11 Turlck_City_LogoPMS_FNL;

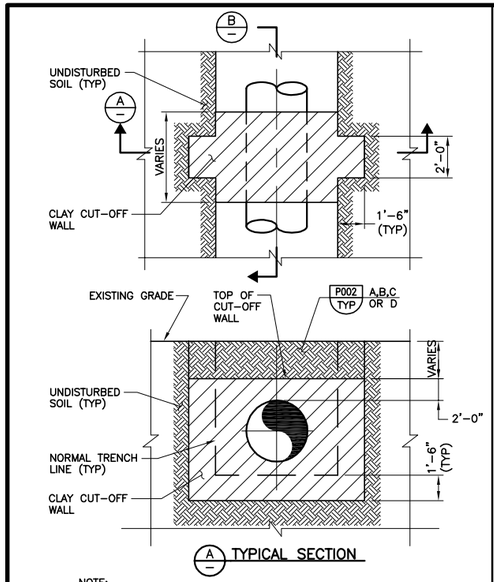

A TYPICAL SECTION

NOTE:

1. KEEP BACKFILL DEPTH EQUAL ON BOTH SIDES OF CUT-OFF WALL AS TRENCH IS BACKFILLED.

P005 TYP R — PIPE TRENCH CUT-OFF WALL
SHEET 1 OF 2

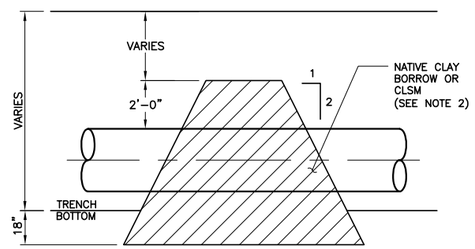

B TYPICAL SECTION

NOTES:

2. SEGREGATE CLAY BORROW FROM PIPE TRENCH EXCAVATION FOR USE AS CUT-OFF WALLS.
3. MOISTURE CONDITION AND COMPACT CLAY BORROW TO THE REQUIREMENTS FOR RESERVOIR DIKE MATERIAL AS SPECIFIED IN SECTION 02300.

P005 TYP R — PIPE TRENCH CUT-OFF WALL
SHEET 2 OF 2 FNO_09-27-05

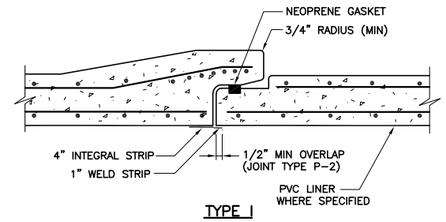

TYPE I

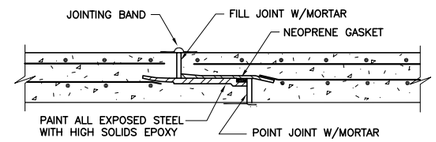

TYPE II

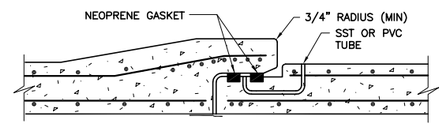

TYPE III

NOTE:

1. FOR TYPE III, LINER JOINT TYPE P-2 SHOWN. FOR ALTERNATE TYPE P-1, PROVIDE 4" JOINT STRIP WITH WELD STRIP EACH SIDE.
2. TYPE II JOINT FOR NON-PRESSURE PIPE AND FOR WALL THICKNESS 7" OR GREATER ONLY.

P006 TYP NS — ACCEPTABLE JOINTS ON RCP FOR 36"ø AND SMALLER
FNO_09-27-05 07-31-08

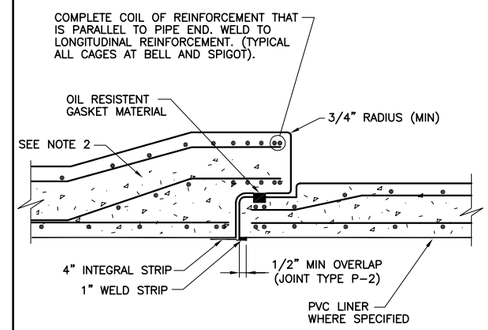

NOTES:

1. ALL EXPOSED PEGS OR CHAIRS FOR REINFORCEMENT CAGE SUPPORT SHALL BE STAINLESS STEEL.
2. EXTEND DOUBLE CAGE OF REINFORCEMENT SHOWN INTO BELL WITH INNER CAGE FAVORING INNER FACE OF BELL INTERIOR SURFACE.
3. LINER JOINT TYPE P-2 SHOWN. FOR ALTERNATE TYPE P-1, PROVIDE 4" JOINT STRIP WITH WELD STRIP EACH SIDE.

TYPE I JOINT

P007 TYP NS — ACCEPTABLE JOINTS ON RCP FOR LARGER THAN 36"ø
SHEET 1 OF 3 07-31-08

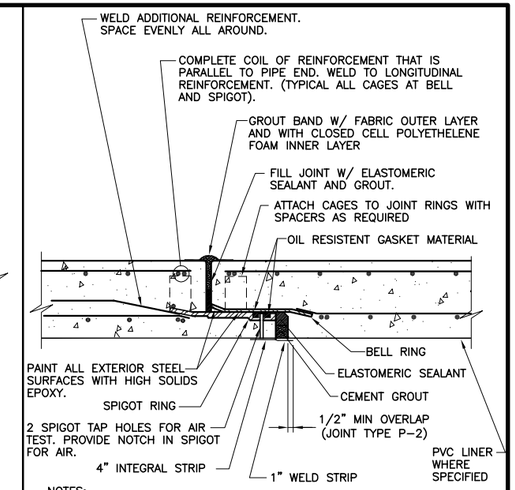

NOTES:

1. ALL EXPOSED PEGS OR CHAIRS FOR REINFORCEMENT CAGE SUPPORT SHALL BE STAINLESS STEEL.
2. LINER JOINT TYPE P-2 SHOWN. FOR ALTERNATE TYPE P-1, PROVIDE 4" JOINT STRIP WITH WELD STRIP EACH SIDE.
3. THIS TYPE OF JOINT SHALL ONLY BE USED FOR NON-PRESSURE PIPE THAT HAS A WALL THICKNESS OF 7" OR GREATER.

TYPE II JOINT

P007 TYP NS — ACCEPTABLE JOINTS ON RCP FOR LARGER THAN 36"ø
SHEET 2 OF 3 07-31-08

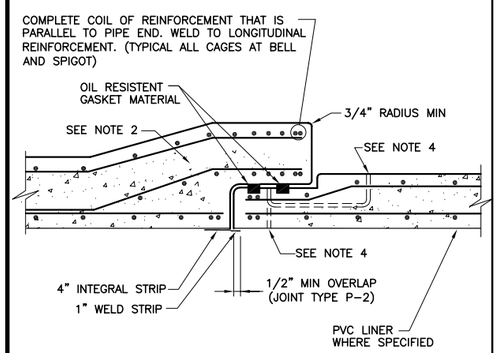

NOTES:

1. ALL EXPOSED PEGS OR CHAIRS FOR REINFORCEMENT CAGE SUPPORT SHALL BE STAINLESS STEEL.
2. EXTEND DOUBLE CAGE OF REINFORCEMENT SHOWN INTO BELL WITH INNER CAGE FAVORING INNER FACE OF BELL INTERIOR SURFACE.
3. LINER JOINT TYPE P-2 SHOWN. FOR ALTERNATE TYPE P-1, PROVIDE 4" JOINT STRIP WITH WELD STRIP EACH SIDE.
4. SST OR PVC TESTING PLUG TO SUIT TESTING APPARATUS.

TYPE III JOINT

P007 TYP NS — ACCEPTABLE JOINTS ON RCP FOR LARGER THAN 36"ø
SHEET 3 OF 3 07-31-08

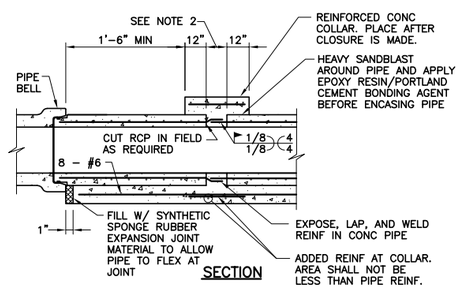

SECTION

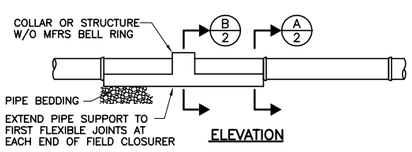

ELEVATION

NOTES:

1. EXCEPT WHERE INDICATED ON THE DRAWINGS, FIELD CLOSURE SHALL BE USED ONLY AS ACCEPTED BY ENGINEER. THE SAME TYPE AND DEPTH OF BEDDING USED UNDER THE PIPE SHALL BE USED UNDER THE FIELD CLOSURE.
2. 6" MINIMUM. SPIGOT LENGTH PLUS 6" MAXIMUM. WHERE GAP LARGER THAN 6", USE SPLICE BAR TO WELD TO REINFORCING BARS AT ENDS OF SPLICED SECTIONS OF PIPE. SPLICE BAR DIAMETER SAME AS BARS BEING SPLICED.

P008 TYP NS — RCP FIELD CLOSURE
SHEET 1 OF 2 07-31-08

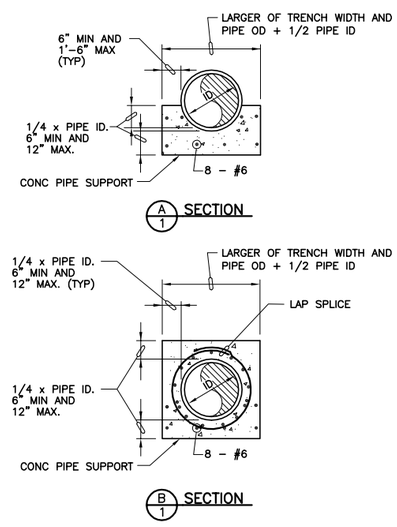

P008 TYP NS — RCP FIELD CLOSURE
SHEET 2 OF 2 07-31-08

REV	DATE	BY	DESCRIPTION
			RECORD DRAWINGS

DESIGNED CE
DRAWN CE/RC
CHECKED CAG
DATE MAY 2012

DISCIPLINE ENGINEER: ** ORIGINAL SEALED BY MICHAEL J. HARTLAUB 12/07/11 C74901 **
PROJECT ENGINEER: ** ORIGINAL SEALED BY DARREN G. BAUNE 12/07/11 C68899 **
VICE PRESIDENT: ** ORIGINAL SEALED BY MICHAEL J. BRITTEN 12/07/11 C27729 **

carollo

CITY OF TURLOCK INC. 1908
STANISLAUS COUNTY, CALIFORNIA

HARDING DRAIN BYPASS
PUMP STATION AND PIPELINE
TYPICALS
TYPICAL DETAILS MECHANICAL/PIPING

VERIFY SCALES
BAR IS ONE INCH ON ORIGINAL DRAWING
0 1"
IF NOT ONE INCH ON THIS SHEET, ADJUST SCALES ACCORDINGLY

JOB NO. 6918B.10
DRAWING NO. T-9
SHEET NO. 13 OF 107

Last Saved By: ALaico 4-18-14 03:45pm

FILENAME: C:\pw_working\projectwise\alaico\dms60465\T-00T009 8-25-14 04:45pm ALaico XREFS: G-BDR; Mjb; BEH; CA-MJB; CA-DGB; CA-MJH; CA-AEB; CA-GRS; CA-KAM; CA-ALM; CA-ALM_11-30-11; CA-DGB_11-30-11; CA-MJB_11-30-11 Turlock_City_LogoPMS_FNL;

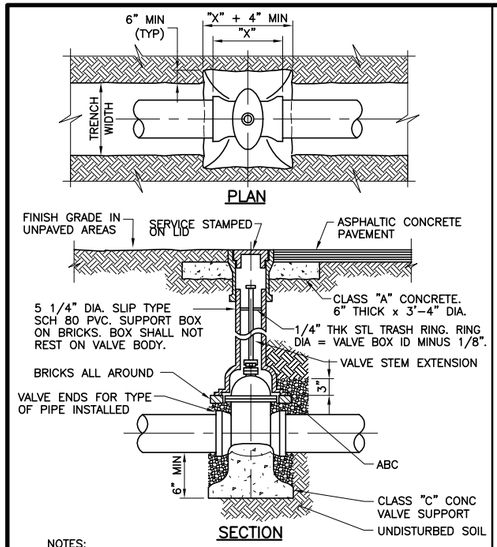

NOTES:

1. ALL BURIED VALVES SHALL BE PROVIDED W/ EXTENSION STEM OPERATOR W/ 2" SQ AWWA NUT WITHIN 36" OF VALVE BOX COVER. NUT IS TO INDICATE DIRECTION OF ROTATION TO OPEN VALVE.
2. COAT BURIED PIPE AND VALVE BOX PER SPECIFICATIONS.
3. CLEAN VALVE BOX OF ALL DEBRIS AND SOIL.
4. VALVE TYPE AS INDICATED ON THE DRAWINGS.

P022 TYP VALVE BOX INSTALLATION

08-01-04C

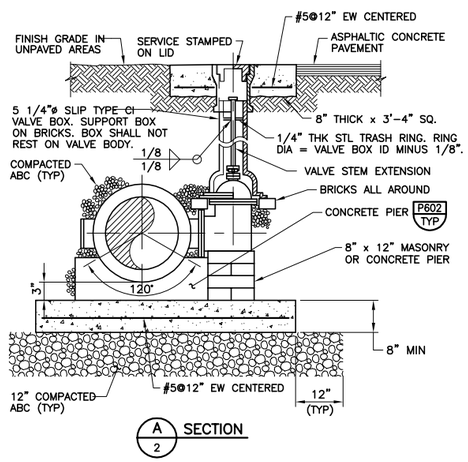

NOTES:

1. ALL BURIED VALVES SHALL BE PROVIDED W/ EXTENSION STEM OPERATOR W/ 2" SQ AWWA NUT WITHIN 36" OF VALVE BOX COVER. NUT IS TO INDICATE DIRECTION OF ROTATION TO OPEN VALVE.
2. COAT BURIED PIPE AND VALVE BOX PER SPECIFICATIONS.
3. CLEAN VALVE BOX OF ALL DEBRIS AND SOIL.

P026 TYP J BURIED VALVE

SHEET 1 OF 2 11-28-11

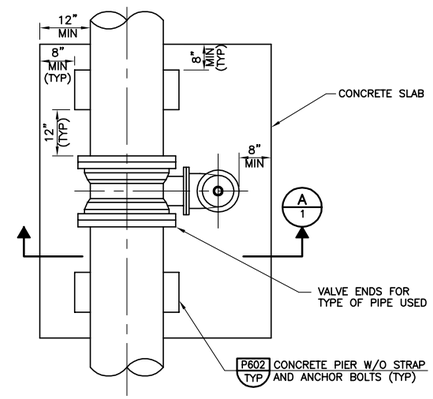

P026 TYP J BURIED VALVE

SHEET 2 OF 2 11-28-11

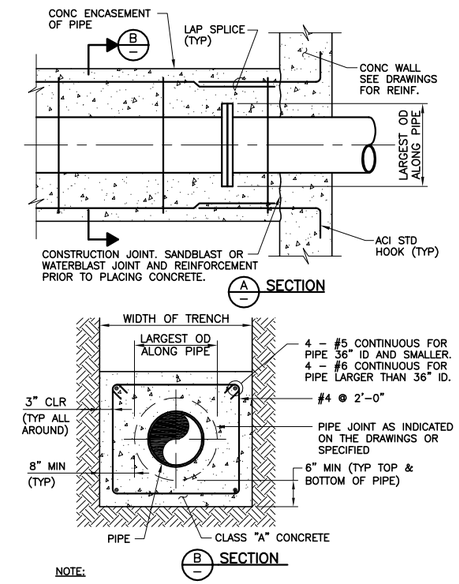

NOTE:

1. TYPE OF PIPE AND TYPE OF PIPE JOINT OR COUPLER AS INDICATED ON THE DRAWINGS.

P040 TYP NS CONCRETE ENCASEMENT OF PIPE

SHEET 1 OF 2 03-16-09

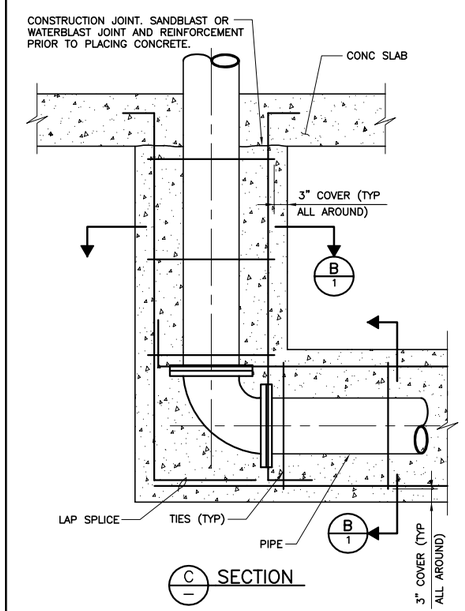

P040 TYP NS CONCRETE ENCASEMENT OF PIPE

SHEET 2 OF 2 03-16-09

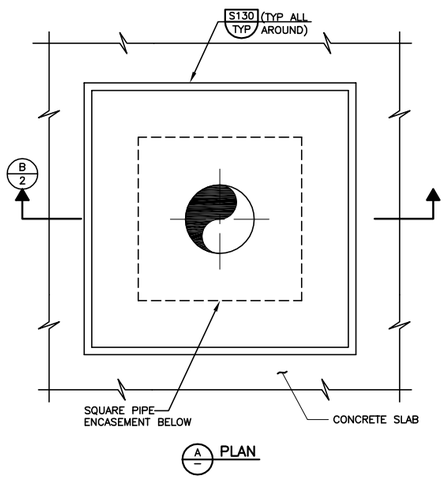

NOTE:

1. TYPE OF PIPE AND TYPE OF PIPE JOINT AS INDICATED ON THE DRAWINGS.

P041 TYP NS SLAB PENETRATION FOR CONCRETE ENCASED PIPE

SHEET 1 OF 2 03-16-09

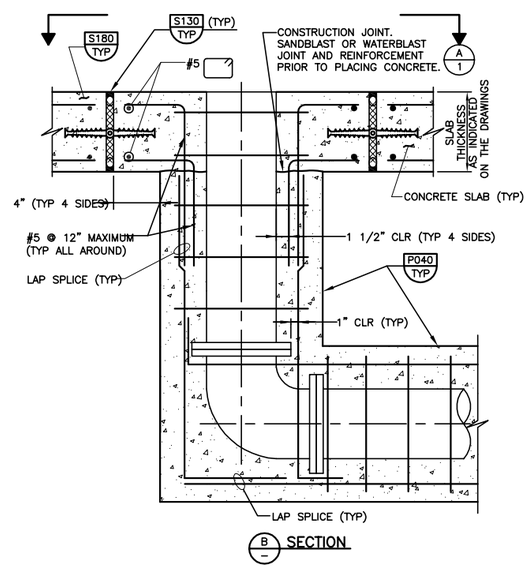

P041 TYP NS SLAB PENETRATION FOR CONCRETE ENCASED PIPE

SHEET 2 OF 2 03-16-09

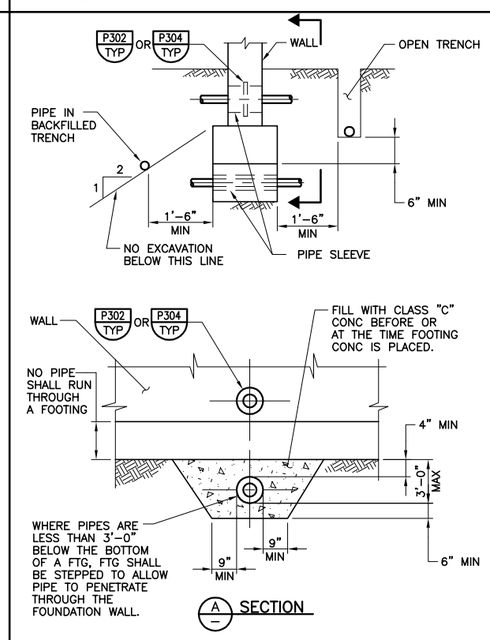

P054 TYP PIPE THRU OR ADJACENT TO FOOTING AND PIPE THROUGH WALL

08-01-04C

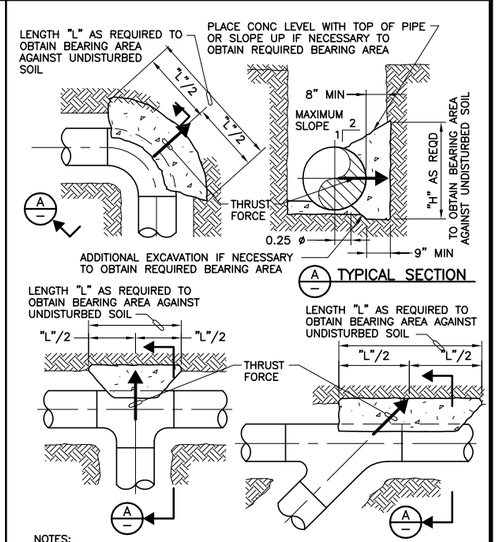

NOTES:

1. BEARING AREA IS THE AREA REQUIRED TO OBTAIN A MAXIMUM SOIL LOADING OF 200 PSF PER FOOT OF DEPTH TO A MAXIMUM VALUE OF 1500 PSF AT THE TOP OF THRUST BLOCK WHEN THE PIPE IS SUBJECTED TO ITS TEST PRESSURE, OR BEARING AREA INDICATED ON THE DRAWINGS.
2. CONCRETE SHALL BE CLASS "A" OR "C".
3. THRUST BLOCK SHALL BEAR ON UNDISTURBED SOIL.

P102 TYP NS PIPE THRUST BLOCK

08-01-04C

REV	DATE	BY	DESCRIPTION
			RECORD DRAWINGS

DESIGNED CE
DRAWN CE/RC
CHECKED CAG
DATE MAY 2012

DISCIPLINE ENGINEER: ** ORIGINAL SEALED BY MICHAEL J. HARTLAUB 12/07/11 C74901 **
PROJECT ENGINEER: ** ORIGINAL SEALED BY DARREN G. BAUNE 12/07/11 C68899 **
VICE PRESIDENT: ** ORIGINAL SEALED BY MICHAEL J. BRITTEN 12/07/11 C27729 **

carollo

CITY OF TURLOCK INC. 1908
STANISLAUS COUNTY, CALIFORNIA

HARDING DRAIN BYPASS
PUMP STATION AND PIPELINE
TYPICALS
TYPICAL DETAILS
PIPING

VERIFY SCALES
BAR IS ONE INCH ON ORIGINAL DRAWING
0 1"
IF NOT ONE INCH ON THIS SHEET, ADJUST SCALES ACCORDINGLY

JOB NO. 6918B.10
DRAWING NO. T-10
SHEET NO. 14 OF 107

Last Saved By: Alaico 6-24-14 09:33am

FILENAME: C:\pw_working\projectwise\alaico\dms60465\T-00T010 8-25-14 04:46pm ALaico XREFS: G-BDR; Mjb; BEH; CA-MJB; CA-DGB; CA-MJH; CA-AEB; CA-GRS; CA-KAM; CA-ALM; CA-ALM_11-30-11; CA-DGB_11-30-11; CA-MJB_11-30-11 Turlck_City_LogoPMS_FNL;

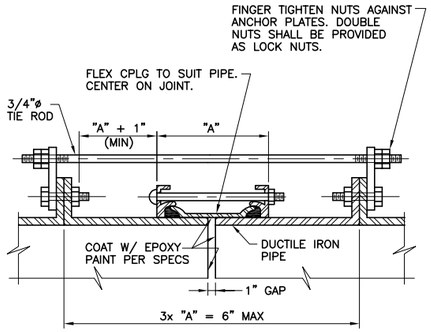

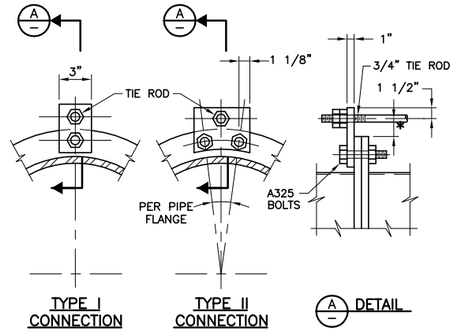

ROD SCHEDULE FOR DIP		
PIPE THRUST. SEE NOTE 2.	TYPE OF CONNECTION	NO. OF RODS
0–6,000#	I	2
6,001–12,000#	II	2
12,001–18,000#	II	3
18,001–24,000#	II	4
24,001–30,000#	II	5

NOTES:

1. ALL EXPOSED FLEXIBLE COUPLINGS SHALL HAVE TIE RODS UNLESS SPECIFICALLY INDICATED OTHERWISE ON THE DRAWINGS.
2. PIPE THRUST SHALL BE BASED ON TEST PRESSURE.
3. PIPE THRUST = 0.7854 x D^2 x TEST PRESSURE, WHERE D IS PIPE OD.
4. MINIMUM TIE ROD YIELD 48,000 PSI.
5. FOR THRUSTS GREATER THAN 30,000 POUNDS, ADD ONE 3/4 INCH DIAMETER ROD FOR EVERY 6,000 POUNDS INCREASE IN THRUST.
6. ALL ROD CONNECTIONS SHALL BE TYPE II FOR THRUSTS GREATER THAN 30,000 POUNDS.
7. GRIND ALL CORNERS SMOOTH.
8. * AS REQD TO CLEAR FLEX CPLG. 3/4" MIN AND 1 1/2" MAX.

P110 TYP — DIP FLEXIBLE COUPLING TIE DOWN

N 08-01-04C

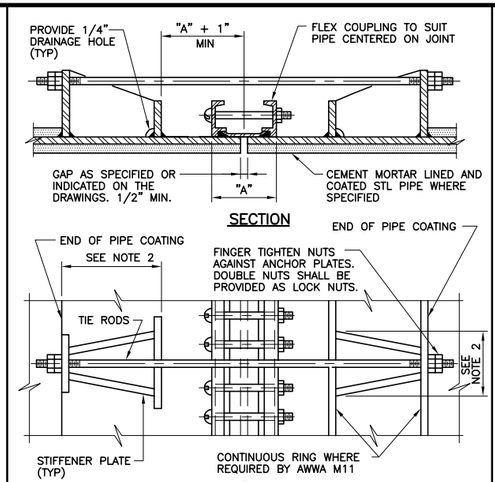

NOTES:

1. ALL EXPOSED FLEXIBLE COUPLINGS SHALL HAVE TIE RODS UNLESS SPECIFICALLY INDICATED OTHERWISE ON THE DRAWINGS.
2. DESIGN SHALL BE BASED ON TEST PRESSURE.
3. ANCHOR LUGS AND TIE RODS FOR STEEL PIPE SHALL BE DESIGNED BY PIPE MANUFACTURER IN ACCORDANCE WITH AWWA M11 STEEL PIPE MANUAL.
4. GRIND ALL CORNERS SMOOTH.
5. COAT ALL EXPOSED STL SURFACES WITH EPOXY PAINT PER SPECIFICATIONS.

P112 TYP — STEEL PIPE FLEXIBLE COUPLING TIE DOWN

08-01-04C

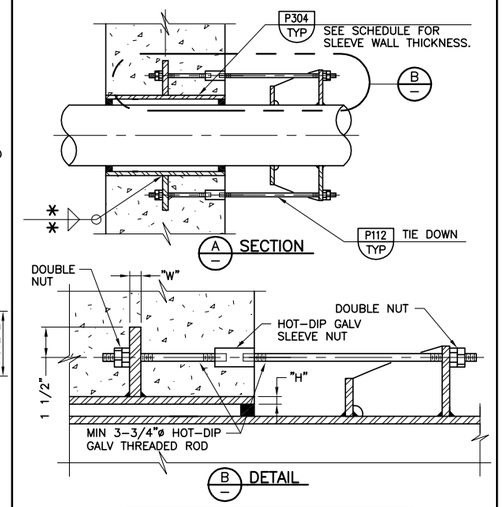

SCHEDULE			
MARK NO	"W"	"H"	* WELD SIZE

P116 TYP — STEEL PIPE TIE DOWN AT SLEEVE

N 08-01-04C

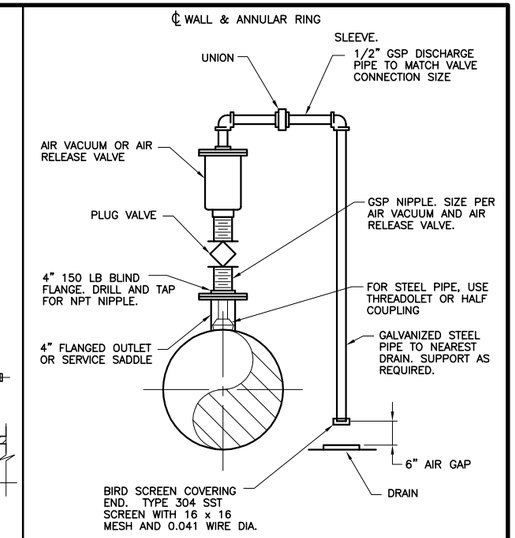

NOTES:

1. VALVE SIZE SHALL BE AS INDICATED ON THE DRAWINGS.
2. SERVICE TAP AND PLUG VALVE SHALL MATCH VALVE INLET SIZE.

P204 TYP — AIR VACUUM AND AIR RELEASE FOR 3" AND SMALLER VALVE ASSEMBLY

08-01-04C

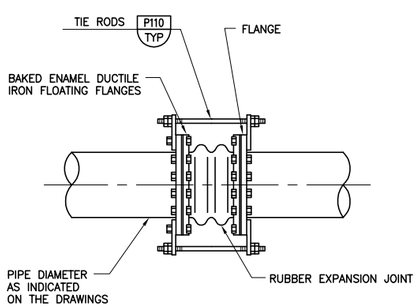

P220 TYP — RUBBER EXPANSION JOINTS FOR DIP

N 08-01-05

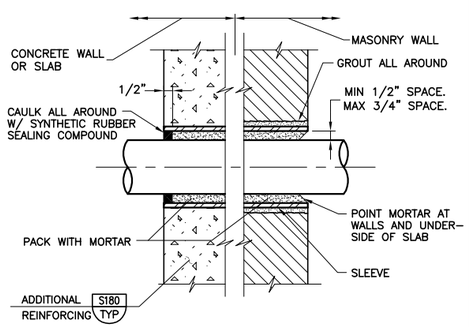

NOTES:

1. 6"ø DIAMETER SLEEVES AND SMALLER SHALL BE SCHEDULE 40 STEEL PIPE OR SCHEDULE 80 PVC PIPE.
2. SLEEVES LARGER THAN 6"ø SHALL BE 1/4" THICK STEEL PIPE.
3. STEEL SLEEVE SHALL BE HOT-DIP GALVANIZED AFTER FABRICATION.
4. SLEEVES FOR ELECTRICAL CONDUIT SHALL BE SCHEDULE 80 PVC.

P302 TYP — SLEEVE INSTALLATION THROUGH DRY WALLS AND FLOOR SLABS

NS 08-01-04C

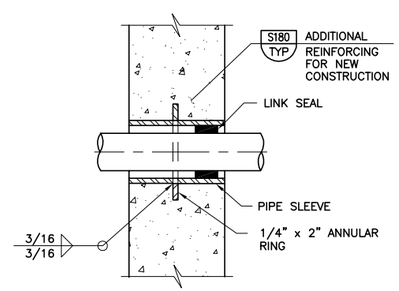

NOTES:

1. 6"ø SLEEVES AND SMALLER SHALL BE SCH 40 STL PIPE.
2. SLEEVES LARGER THAN 6"ø SHALL BE 1/4" THICK STL PIPE.
3. IN WALLS THICKER THAN 12", LINK SEAL SHALL BE INSTALLED AT BOTH ENDS OF WALL SLEEVE. SLEEVE DIAMETER SHALL BE PER LINK SEAL MANUFACTURER'S RECOMMENDATION.
4. SLEEVE SHALL BE HOT-DIP GALVANIZED AFTER FABRICATION.

P304 TYP — SLEEVE INSTALLATION THROUGH WALLS AND FLOOR SLABS

NS 08-01-04C

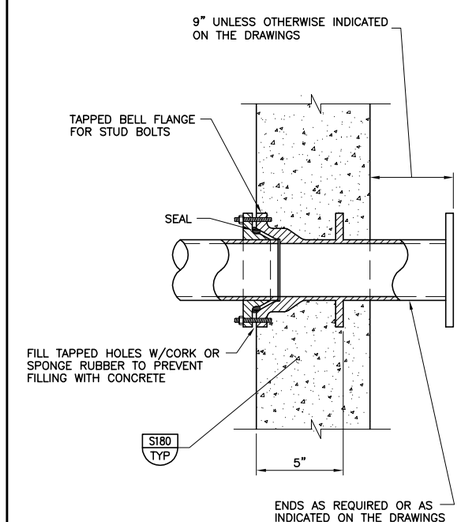

P306 TYP — DIP WALL PIPE

N 08-01-04C

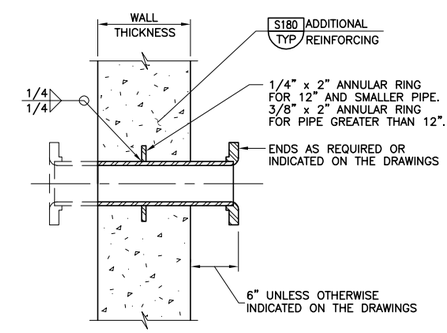

P310 TYP — WALL THIMBLE FOR STEEL PIPE

N 08-01-04C

REV	DATE	BY	DESCRIPTION
			RECORD DRAWINGS

DESIGNED CE
DRAWN CE/RC
CHECKED CAG
DATE MAY 2012

DISCIPLINE ENGINEER: ** ORIGINAL SEALED BY MICHAEL J. HARTLAUB 12/07/11 C74901 **
PROJECT ENGINEER: ** ORIGINAL SEALED BY DARREN G. BAUNE 12/07/11 C68899 **
VICE PRESIDENT: ** ORIGINAL SEALED BY MICHAEL J. BRITTEN 12/07/11 C27729 **

carollo

CITY OF TURLOCK INC. 1908
STANISLAUS COUNTY, CALIFORNIA

HARDING DRAIN BYPASS
PUMP STATION AND PIPELINE
TYPICALS
TYPICAL DETAILS
PIPING

VERIFY SCALES
BAR IS ONE INCH ON ORIGINAL DRAWING
0 1"
IF NOT ONE INCH ON THIS SHEET, ADJUST SCALES ACCORDINGLY

JOB NO. 6918B.10
DRAWING NO. T-11
SHEET NO. 15 OF 107

Last Saved By: ALaico 6-24-14 09:33am

FILENAME: C:\pw_working\projectwise\alaico\dms60465\T-00T011 8-25-14 04:46pm ALaico XREFS: G-BDR; Mjb; BEH; CA-MJB; CA-DGB; CA-MJH; CA-AEB; CA-GRS; CA-KAM; CA-ALM; CA-ALM_11-30-11; CA-DGB_11-30-11; CA-MJB_11-30-11 Turlck_City_LogoPMS_FNL;

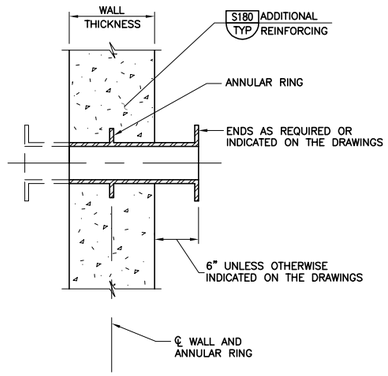

P312 TYP N — WALL THIMBLE FOR DIP

07-31-08

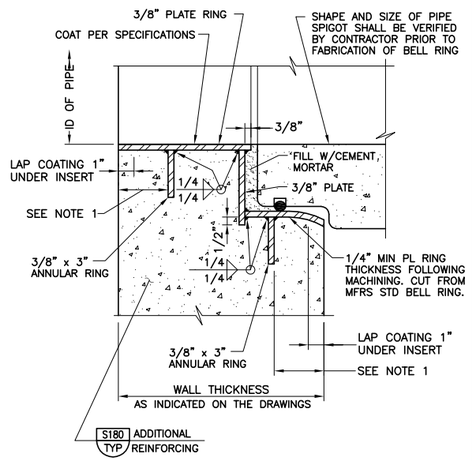

NOTES:

1. REINFORCING BAR COVER PLUS DIAMETER OF OUTSIDE BARS. INSTALL ANNULAR RINGS PARALLEL TO FACE OF WALL AFTER ACCOUNTING FOR SLOPE OF PIPE. INSTALL BELL RING INSERT PERPENDICULAR TO CENTERLINE OF PIPE.
2. GRIND SMOOTH ALL METAL EDGES IN AREAS TO BE COATED AND ALL SURFACES IN PIPE SEATING AREA.
3. RING SHALL HAVE SPIDER BRACING INSTALLED AT POINT OF MANUFACTURE.

P324 TYP NS — STANDARD BELL RING INSERT FOR 48"ø AND SMALLER RCP

07-31-08

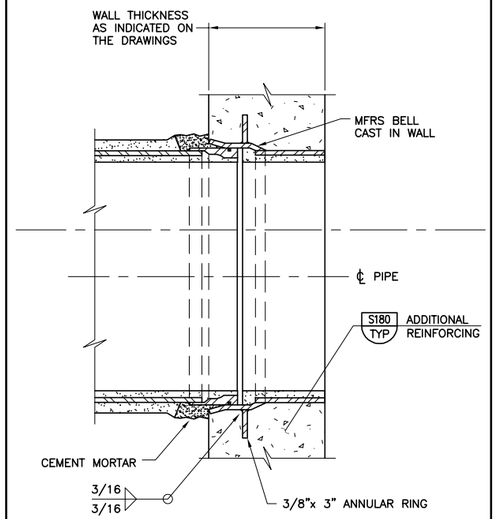

NOTE:

1. RING SHALL HAVE SPIDER BRACING INSTALLED AT POINT OF MANUFACTURE.

P326 TYP — BELL RING INSERT FOR STEEL PIPE

08-01-04C

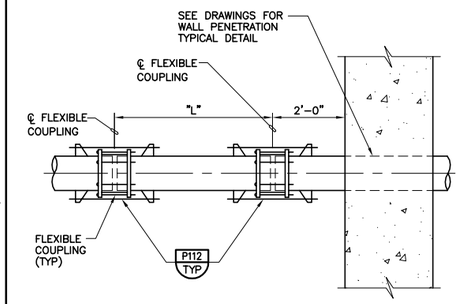

NOMINAL PIPE DIAMETER IN INCHES	"L"
LESS THAN 31"	5'-0"
GREATER THAN 31"-42"	5'-6"

NOTE:

1. PIPES SHALL BE INSTALLED STRAIGHT WITHOUT HORIZONTAL OR VERTICAL OFFSET. DO NOT USE JOINT ROTATION TO MAKE UP MISALIGNED PIPE.

P346 TYP N — RESTRAINED STEEL PIPE FLEXIBLE CONNECTION AT WALL PENETRATION

08-01-05

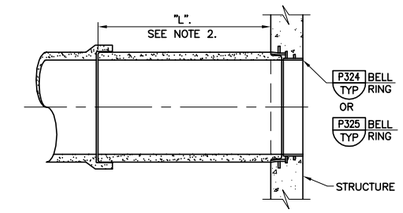

NOMINAL PIPE DIAMETER IN INCHES	"L"
24" THROUGH 30"	7'-0"
36"	8'-0"
42" THROUGH 48"	9'-0"
54"	10'-0"
60"	11'-0"

NOTES:

1. PIPES SHALL BE INSTALLED STRAIGHT WITHOUT HORIZONTAL OR VERTICAL OFFSET. DO NOT USE JOINT ANGULAR DEFLECTION TO MAKE UP FOR MISALIGNED PIPE.
2. DO NOT LOCATE FIELD CLOSURE ON FIRST SECTION OF PIPE.

P348 TYP N — RCP FLEXIBLE CONNECTION AT WALL PENETRATION

08-01-05

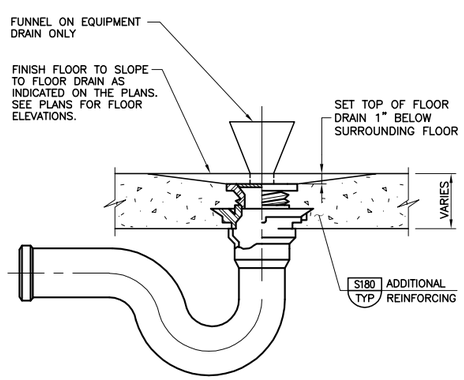

NOTE:

1. PROVIDE 12" RADIUS SLOPE TO EQUIPMENT DRAINS WHERE FLOOR DOES NOT SLOPE TO DRAIN.

P410 TYP S — FLOOR DRAIN OR EQUIPMENT DRAIN

08-01-04C

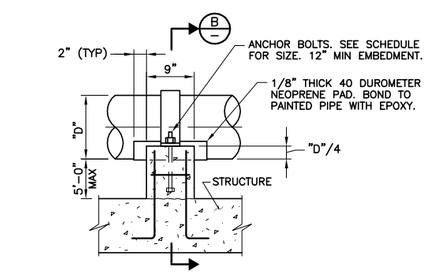

A — SECTION—SUPPORT AT STRUCTURE

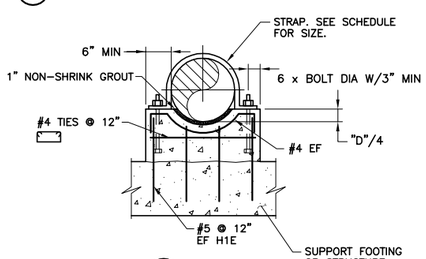

B — SECTION

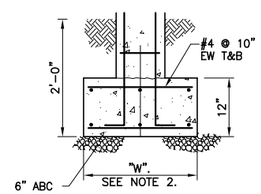

C — SECTION—ISOLATED SUPPORT W/FOOTING

SCHEDULE		
PIPE SIZE	STRAP SIZE	ANCHOR BOLT DIA
8"-12"	FB 1/4" x 4"	1/2"ø
14"-24"	FB 5/16" x 4"	5/8"ø
26"-36"	FB 3/8" x 4"	3/4"ø

NOTES:

1. IF SUPPORT IS SUBMERGED OR LOCATED BELOW THE TOP OF WALL IN WATER BEARING STRUCTURE, MATERIAL FOR ANCHOR BOLTS AND STRAP SHALL BE STAINLESS STEEL. IN ALL OTHER AREAS, MATERIAL FOR ANCHOR BOLTS AND STRAP SHALL BE HOT-DIP GALVANIZED STEEL UNLESS OTHERWISE INDICATED ON THE DRAWINGS.
2. THE WIDTH OF THE FOOTING "W" = 2'-6". THE LENGTH OF THE FOOTING = "D" + 2'-0".

P602 TYP N — CONCRETE PIPE SUPPORT

08-01-05

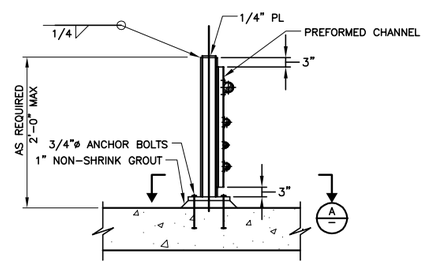

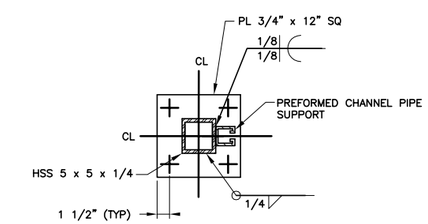

A — SECTIONAL PLAN

P615 TYP — PIPE SUPPORT POST WITH PREFORMED CHANNEL

06-24-14

— FINISH GRADE

ADJUSTABLE PIPE SADDLE SUPPORT SCHEDULE DIMENSIONS IN INCHES					
SIZE OF SUPPORTED PIPE	PIPE SIZE "A"	PIPE SIZE "B"	"C"	"D" MINIMUM	"D" MAXIMUM
2 1/2 *	2 1/2	1 1/2	9	8	13
3	2 1/2	1 1/2	9	8 1/2	13 1/2
3 1/2	2 1/2	1 1/2	9	8 1/2	13 1/2
4	3	2 1/2	9	9 1/2	14
6	3	2 1/2	9	10 1/2	15 1/2
8	3	2 1/2	9	11 1/2	16 1/2
10	3	2 1/2	9	13 1/2	18 1/2
12	3	2 1/2	9	15	19 1/2
14	4	3	11	16 1/2	20 1/2
16	4	3	11	17 1/2	22 1/2
18	6	3 1/2	13 1/2	19 1/2	24
20	6	3 1/2	13 1/2	21	25 1/2
24	6	4	13 1/2	23 1/2	28 1/2
30	6	4	13 1/2	27	31 1/2
32	6	4	13 1/2	28 1/2	32 1/2
36	6	4	13 1/2	30 1/2	34 1/2

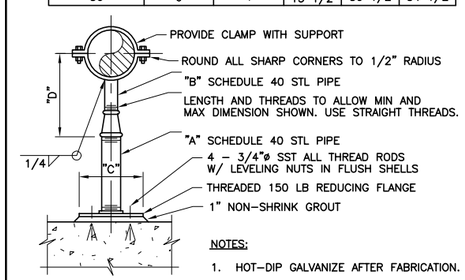

NOTES:

1. HOT-DIP GALVANIZE AFTER FABRICATION.
2. * USE 2 1/2" SUPPORTS FOR PIPES LESS THAN 2 1/2"ø

P624 TYP NS — ADJUSTABLE PIPE SUPPORT

08-01-04C

REV	DATE	BY	DESCRIPTION
			RECORD DRAWINGS

DESIGNED CE
DRAWN CE/RC
CHECKED CAG
DATE MAY 2012

DISCIPLINE ENGINEER: ** ORIGINAL SEALED BY MICHAEL J. HARTLAUB 12/07/11 C74901 **
PROJECT ENGINEER: ** ORIGINAL SEALED BY DARREN G. BAUNE 12/07/11 C68899 **
VICE PRESIDENT: ** ORIGINAL SEALED BY MICHAEL J. BRITTEN 12/07/11 C27729 **

carollo

CITY OF TURLOCK INC. 1908
STANISLAUS COUNTY, CALIFORNIA

HARDING DRAIN BYPASS
PUMP STATION AND PIPELINE
TYPICALS
TYPICAL DETAILS
PIPING

VERIFY SCALES
BAR IS ONE INCH ON ORIGINAL DRAWING
0 — 1"
IF NOT ONE INCH ON THIS SHEET, ADJUST SCALES ACCORDINGLY

JOB NO. 6918B.10
DRAWING NO. T-12
SHEET NO. 16 OF 107

FILENAME: C:\pw_working\projectwise\alaico\dms60465\T-00T012 8-25-14 04:47pm ALaico XREFS: G-BDR; Mjb; BEH; CA-MJB; CA-DGB; CA-MJH; CA-AEB; CA-GRS; CA-KAM; P346; P312; CA-ALM; CA-ALM_11-30-11; CA-DGB_11-30-11; CA-MJB_11-30-11 Turlck_City_LogoPMS_FNL;

Last Saved By: ALaico 6-24-14 09:33am

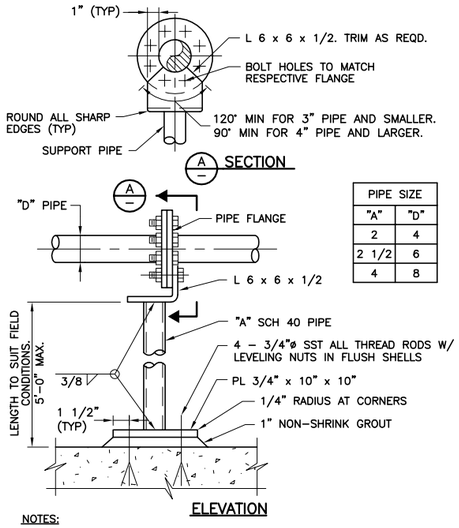

PIPE SIZE	
"A"	"D"
2	4
2 1/2	6
4	8

NOTES:

1. MAXIMUM VERTICAL LOAD = 1000 LBS.
2. IF SUPPORT IS SUBMERGED OR LOCATED BELOW THE TOP OF WALL IN WATER BEARING STRUCTURE, MATERIAL FOR ANCHOR BOLTS AND STRAP SHALL BE STAINLESS STEEL. IN ALL OTHER AREAS, MATERIAL FOR ANCHOR BOLTS AND STRAP SHALL BE HOT-DIP GALVANIZED STEEL UNLESS OTHERWISE INDICATED ON THE DRAWINGS.

P626 TYP — PIPE SUPPORT

NS 08-01-04C

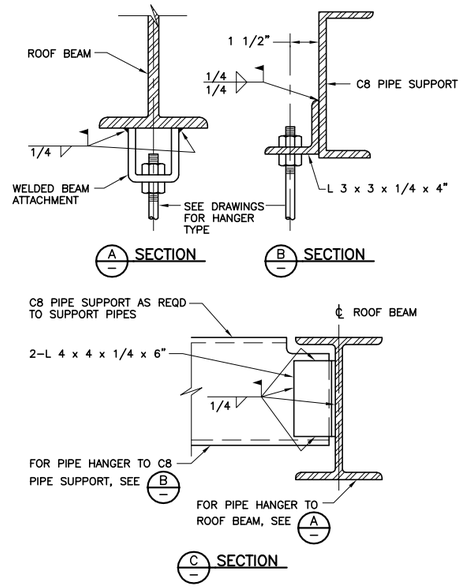

P636 TYP — PIPE HANGER SUPPORT

08-01-04C

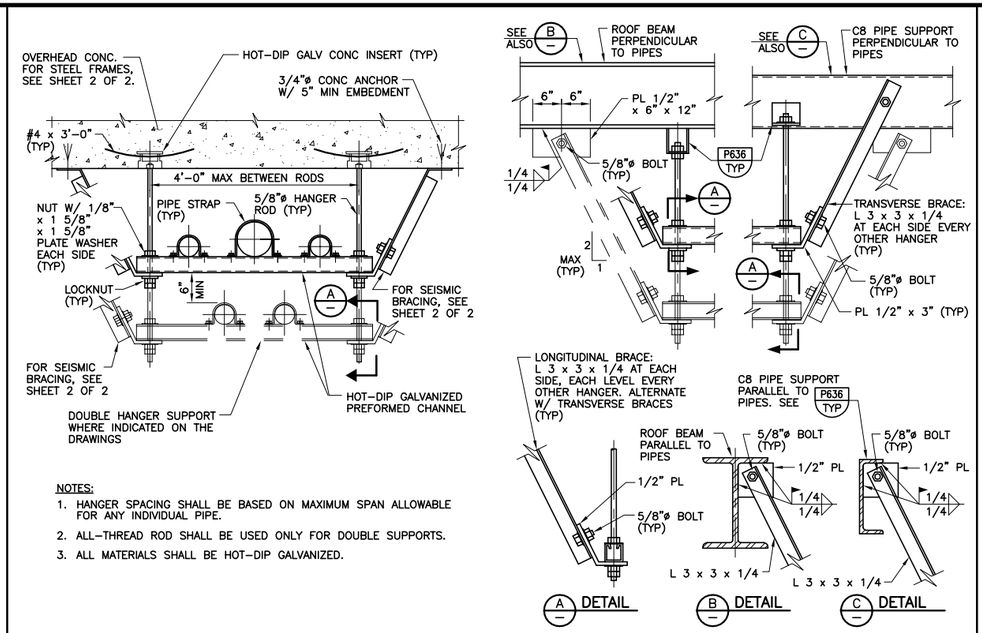

NOTES:

1. HANGER SPACING SHALL BE BASED ON MAXIMUM SPAN ALLOWABLE FOR ANY INDIVIDUAL PIPE.
2. ALL-THREAD ROD SHALL BE USED ONLY FOR DOUBLE SUPPORTS.
3. ALL MATERIALS SHALL BE HOT-DIP GALVANIZED.

P638 TYP — DOUBLE ROD PIPE HANGER

N 08-01-04C

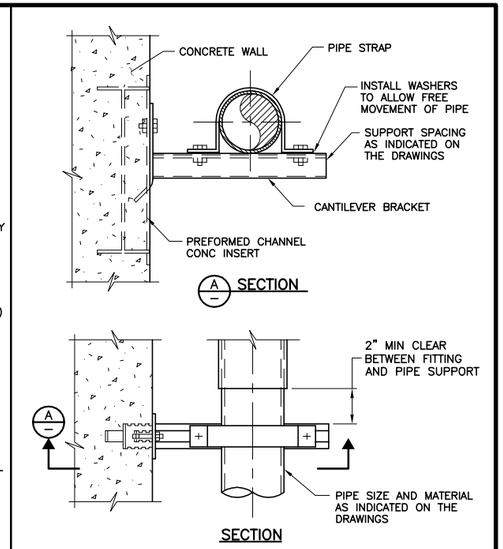

NOTE:

1. IF SUPPORT IS SUBMERGED OR LOCATED BELOW THE TOP OF WALL IN WATER BEARING STRUCTURE, ALL MATERIAL SHALL BE STAINLESS STEEL. IN ALL OTHER AREAS, THE MATERIALS SHALL BE HOT-DIP GALAVANIZED STEEL UNLESS OTHERWISE INDICATED ON THE DRAWINGS.

P652 TYP — PIPE SUPPORT GUIDE FOR ONE PIPE

08-01-04C

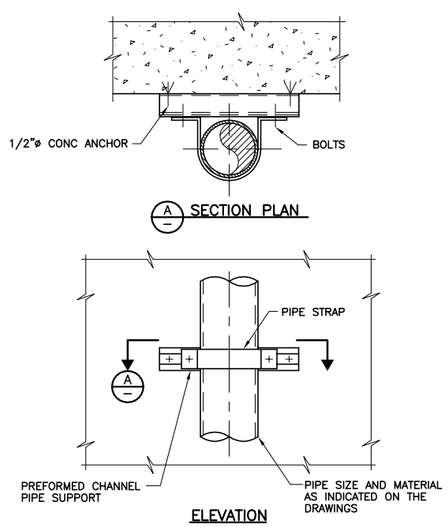

NOTE:

1. IF SUPPORT IS SUBMERGED OR LOCATED BELOW THE TOP OF WALL IN WATER BEARING STRUCTURE, ALL MATERIAL SHALL BE STAINLESS STEEL. IN ALL OTHER AREAS, THE MATERIALS SHALL BE HOT-DIP GALAVANIZED STEEL UNLESS OTHERWISE INDICATED ON THE DRAWINGS.

P662 TYP — PIPE SUPPORT FOR ONE VERTICAL RISER

08-01-04C

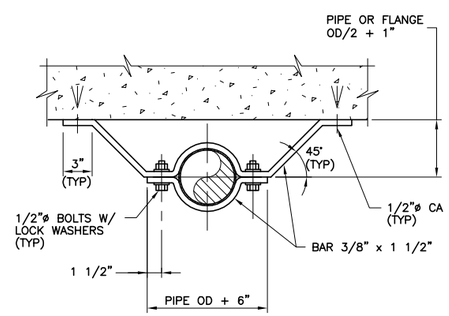

NOTE:

1. IF SUPPORT IS SUBMERGED OR LOCATED BELOW THE TOP OF WALL IN WATER BEARING STRUCTURE, ALL MATERIAL SHALL BE STAINLESS STEEL. IN ALL OTHER AREAS, THE MATERIALS SHALL BE HOT-DIP GALAVANIZED STEEL UNLESS OTHERWISE INDICATED ON THE DRAWINGS.

P666 TYP — PIPE SUPPORT FOR 8" AND SMALLER PIPE

08-01-04C

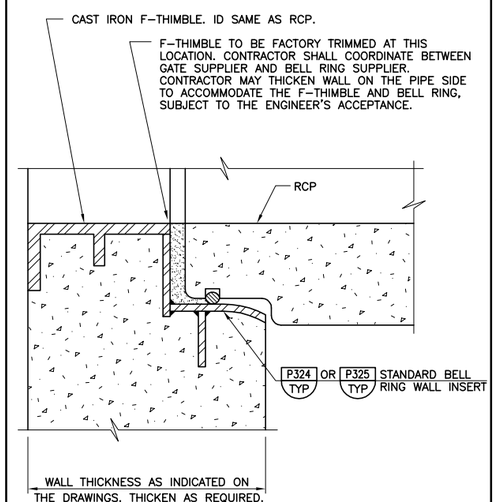

P716 TYP — CAST IRON SLIDE GATE TO RCP CONNECTION

S 08-01-05

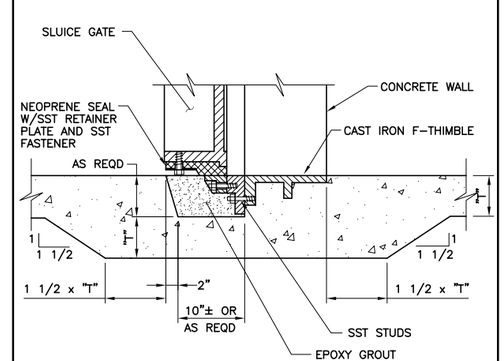

NOTE:

1. NEOPRENE SEAL MAY BE MOUNTED ON THE FRAME IN LIEU OF ON THE SLIDE AS SHOWN.

P718 TYP — FLUSH BOTTOM CAST IRON SLIDE GATE

NS 07-31-08

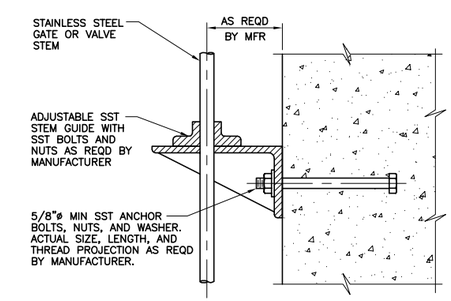

P750 TYP — STEM GUIDE

08-01-05

REV	DATE	BY	DESCRIPTION
			RECORD DRAWINGS

DESIGNED CE
DRAWN CE/RC
CHECKED CAG
DATE MAY 2012

DISCIPLINE ENGINEER: ** ORIGINAL SEALED BY MICHAEL J. HARTLAUB 12/07/11 C74901 **
PROJECT ENGINEER: ** ORIGINAL SEALED BY DARREN G. BAUNE 12/07/11 C68899 **
VICE PRESIDENT: ** ORIGINAL SEALED BY MICHAEL J. BRITTEN 12/07/11 C27729 **

carollo

CITY OF TURLOCK INC. 1908
STANISLAUS COUNTY, CALIFORNIA

HARDING DRAIN BYPASS
PUMP STATION AND PIPELINE
TYPICALS
TYPICAL DETAILS
PIPING

VERIFY SCALES
BAR IS ONE INCH ON ORIGINAL DRAWING
0 1"
IF NOT ONE INCH ON THIS SHEET, ADJUST SCALES ACCORDINGLY

JOB NO. 6918B.10
DRAWING NO. T-13
SHEET NO. 17 OF 107

Last Saved By: ALaico 4-18-14 03:41pm

FILENAME: C:\pw_working\projectwise\alaico\dms60465\T-00T013 8-25-14 04:47pm ALaico XREFS: G-BDR; Mjb; BEH; CA-MJB; CA-DGB; CA-MJH; CA-AEB; CA-GRS; CA-KAM; CA-ALM; CA-ALM_11-30-11; CA-DGB_11-30-11; CA-MJB_11-30-11 Turlck_City_LogoPMS_FNL;

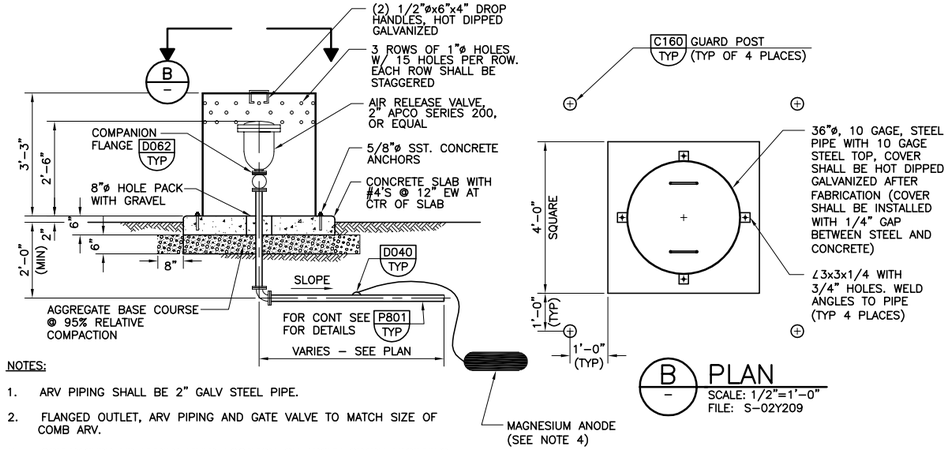

NOTES:

1. ARV PIPING SHALL BE 2" GALV STEEL PIPE.
2. FLANGED OUTLET, ARV PIPING AND GATE VALVE TO MATCH SIZE OF COMB ARV.
3. CONTRACTOR TO VERIFY FIELD LOCATION OF ABOVE GRADE FACILITIES PRIOR TO PIPE FABRICATION.
4. INSTALL 32 LB. PACKAGED MAGNESIUM ANODE, HIGH POTENTIAL OUTPUT TYPE, WITH 10 FT. LONG LEAD WIRE OF NO. 10 AWG/BLACK TWHN INSULATION. REMOVE PAPER OR PLASTIC SHIPPING COVER AND LOCATE ANODE MID-WAY BETWEEN AIR RELEASE VALVE AND GATE VALVE, MINIMUM OF 3 FT. FROM PIPE AND 1 FT. BELOW PIPE IN NATIVE SOIL. COVER ANODE WITH MINIMUM 6 INCHES NATIVE SOIL FREE OF ROCKS, CLODS, AND VEGETATION. CONNECT ANODE LEAD WIRE TO PIPE IN ACCORDANCE WITH TYPICAL DETAIL D040 TYP.

P800 TYP AIR RELEASE VALVE

SCALE: 1/2"= 1'-0"
FILE: S-02Y210

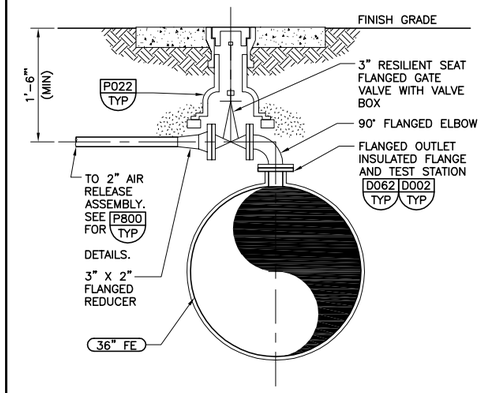

P801 TYP AIR RELEASE VALVE CONNECTION

SCALE: 3/4"= 1'-0"
FILE: S-02Y213

NOTES:

1. SUBMIT FULL VAULT LAYOUT PRIOR TO FABRICATION FOR ENGINEER'S REVIEW.
2. SEE PLAN FOR VALVE TYPE AND LOCATION.
3. MANHOLE COVER SHALL BE FLUSH WITH FINISH GRADE AND SHALL BE H20 RATED.
4. ARV PIPING SHALL BE DIP.
5. VALVES ARE SLOW CLOSING AIR AND VACUUM VALVES. DUAL COMBINATION VALVES ON PUMP STATION SITE (SEE DWG PSY-1) SHALL BE 6" VALVES. DUAL COMBINATION VALVES AT STATION 297+00 SHALL BE 4" VALVES
6. INSTALL 32 LB. PACKAGED MAGNESIUM ANODE, HIGH POTENTIAL OUTPUT TYPE, WITH 10 FT. LONG LEAD WIRE OF NO. 10 AWG/BLACK TWHN INSULATION. REMOVE PAPER OR PLASTIC SHIPPING COVER AND LOCATE ANODE MID-WAY BETWEEN GATE VALVE AND VAULT, MINIMUM OF 3 FT. FROM PIPE AND 1 FT. BELOW PIPE IN NATIVE SOIL. COVER ANODE WITH MINIMUM 6 INCHES NATIVE SOIL FREE OF ROCKS, CLODS, AND VEGETATION. CONNECT ANODE LEAD WIRE TO PIPE IN ACCORDANCE WITH TYPICAL DETAIL D040 TYP.
7. SEE SPEC 3410 FOR PRE-CAST VAULT REQUIREMENTS. SLOPE FLOOR TOWARDS SUMP AT 1%.
8. ROUTE ARV DRAIN TO SUMP.

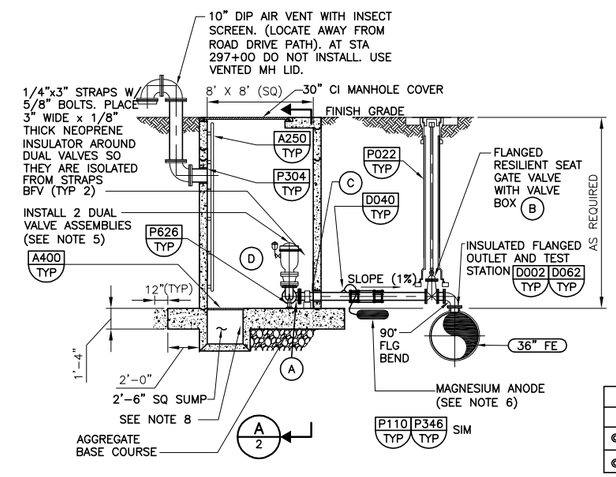

SIZE SCHEDULE				
LOCATION	"A"	"B"	"C"	"D"
@ PS	6"	6"	6"	6"
@ STA 297+00	4"	4"	4"	4"

P802 TYP SLOW CLOSING AIR AND VACUUM VALVE ASSEMBLY

NTS
SHEET 1 OF 2
01/24/12

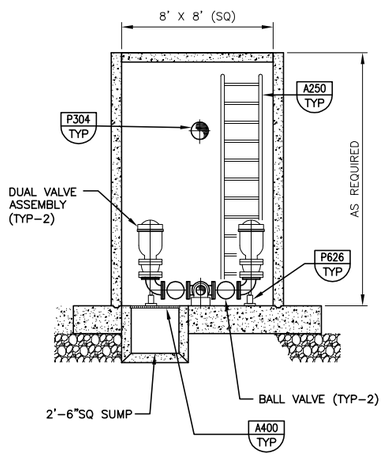

A/1 SECTION

P802 TYP SLOW CLOSING AIR AND VACUUM VALVE ASSEMBLY

NTS
SHEET 2 OF 2
01/24/12

NOTES:

1. ON CEMENT MORTAR COATED STEEL MAINS, INSTALL INSULATING FLANGE KIT ON VALVE FLANGE AND CEMENT MORTAR COAT FROM THE FLANGE TO THE MAIN. MASTIC COAT THE VALVE, TAPE WRAP THE LATERAL PIPING AND INSTALL A 32-POUND MAGNESIUM ANODE.
2. ON DUCTILE IRON, AND PVC MAINS, MASTIC COAT THE VALVE. TAPE WRAP THE LATERAL PIPING. INSTALL A 32-POUND MAGNESIUM ANODE.
3. INSTALL 32 LB. PACKAGED MAGNESIUM ANODE, HIGH POTENTIAL OUTPUT TYPE, WITH 10 FT. LONG LEAD WIRE OF NO. 10 AWG/BLACK TWHN INSULATION. REMOVE PAPER OR PLASTIC SHIPPING COVER AND LOCATE ANODE MID-WAY BETWEEN 36" MAIN AND BLOW-OFF, MINIMUM OF 3 FT. FROM PIPE AND 1 FT. BELOW PIPE IN NATIVE SOIL. COVER ANODE WITH MINIMUM 6 INCHES NATIVE SOIL FREE OF ROCKS, CLODS, AND VEGETATION. CONNECT ANODE LEAD WIRE TO PIPE IN ACCORDANCE WITH TYPICAL DETAIL D040 TYP.

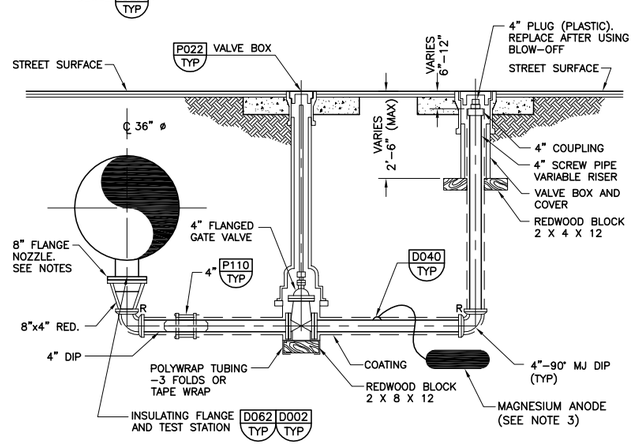

P804 TYP 4" BLOW-OFF ASSEMBLY

SCALE: 1/2"= 1'-0"
FILE: S-02Y212

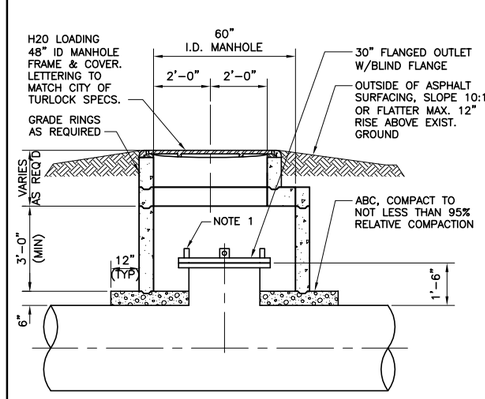

NOTES:

1. PROVIDE FOUR LIFTING LUGS AT 90° SEPERATION.
2. IF DUCTILE IRON PIPE IS USED FOR THE 36" FE PIPE LINE, PROVIDE 36" TEE FITTING FOR ACCESS TEE.

P806 TYP ACCESS TEE ASSEMBLY

SCALE: 3/8"= 1'-0"
FILE: S-02Y208

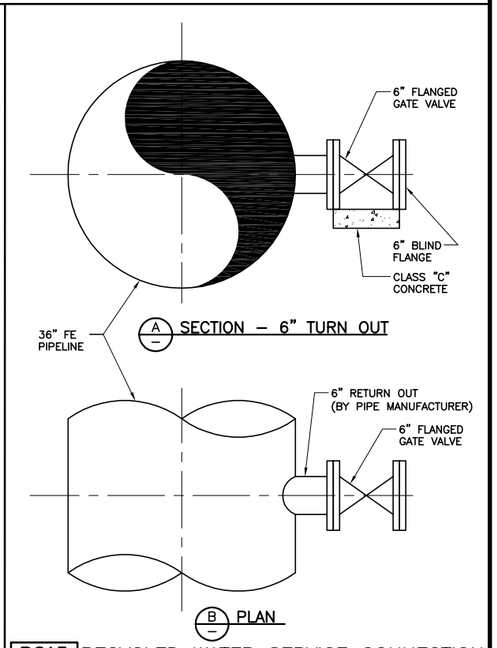

P815 TYP RECYCLED WATER SERVICE CONNECTION

04-18-14

REV	DATE	BY	DESCRIPTION
			RECORD DRAWINGS

DESIGNED CE
DRAWN CE/RC
CHECKED CAG
DATE MAY 2012

DISCIPLINE ENGINEER: ** ORIGINAL SEALED BY MICHAEL J. HARTLAUB 12/07/11 C74901 **
PROJECT ENGINEER: ** ORIGINAL SEALED BY DARREN G. BAUNE 12/07/11 C68899 **
VICE PRESIDENT: ** ORIGINAL SEALED BY MICHAEL J. BRITTEN 12/07/11 C27729 **

carollo

CITY OF TURLOCK INC. 1908
STANISLAUS COUNTY, CALIFORNIA

HARDING DRAIN BYPASS
PUMP STATION AND PIPELINE
TYPICALS
TYPICAL DETAILS
PIPING

VERIFY SCALES
BAR IS ONE INCH ON ORIGINAL DRAWING
0 1"
IF NOT ONE INCH ON THIS SHEET, ADJUST SCALES ACCORDINGLY

JOB NO. 6918B.10
DRAWING NO. T-14
SHEET NO. 18 OF 107

Last Saved By: ALaico 4-18-14 03:44pm

FILENAME: C:\pw_working\projectwise\alaico\dms60465\T-00T014 8-25-14 04:48pm ALaico XREFS: G-BDR; Mjb; BEH; CA-MJB; CA-DGB; CA-MJH; CA-AEB; CA-GRS; CA-KAM; CA-ALM; CA-ALM_11-30-11; CA-DGB_11-30-11; CA-MJB_11-30-11; S-02Y211b Turlck_City_LogoPMS_FNL;

1. CONCRETE CONSTRUCTION SHALL COMPLY WITH ACI "BUILDING CODE REQUIREMENTS FOR STRUCTURAL CONCRETE" (ACI 318) AND "CODE REQUIREMENTS FOR ENVIRONMENTAL ENGINEERING CONCRETE STRUCTURES (ACI 350-1) AND COMMENTARY (ACI 350R-01)."
2. UNLESS OTHERWISE INDICATED ON THE DRAWINGS, MINIMUM REINFORCEMENT OF CONCRETE WALLS OR SLABS SHALL BE:
   10" THICK OR LESS – USE #5 @ 12" EW
   MORE THAN 10" THICK – USE #5 @ 12" EWEF
3. WALL REINFORCEMENT AT CORNERS OR JUNCTIONS OF WALLS SHALL BE CONTINUOUS, LAP SPLICED, OR TERMINATED IN AN ACI STANDARD 90 DEGREE HOOK. LAP SPLICES SHALL CONFORM WITH NOTE 12.
4. UNLESS OTHERWISE INDICATED ON THE DRAWINGS, BARS SHALL BE DOWELED. DOWELS SHALL BE THE SAME SIZE AND SPACING AS THE REINFORCEMENT WHICH IS SPLICED TO THE DOWELS.
5. SLABS, BEAMS AND COLUMN REINFORCING BARS SHALL HAVE A MINIMUM EXTENSION OR ANCHORAGE INTO SUPPORTS IN ACCORDANCE WITH ACI 318 AND ACI 350.
6. STIRRUP SUPPORT BARS SHALL BE PROVIDED TO SECURE TOP BARS AGAINST DISPLACEMENT AS REQUIRED.
7. UNLESS OTHERWISE INDICATED ON THE DRAWINGS, CONCRETE COVER OVER #11 AND SMALLER REINF BARS SHALL BE AS FOLLOWS:
   A. SLABS AND JOISTS:
      FORMED CONCRETE SURFACES AND UNFORMED TOP SURFACES FOR DRY CONDITIONS:
      #7 BARS AND SMALLER.....1"
      #8 BARS AND LARGER.....1 1/2"
      FORMED CONCRETE SURFACES AND UNFORMED TOP SURFACES EXPOSED TO WEATHER, IN CONTACT WITH SOIL OR WATER, OR LOCATED OVER WATER.....2"
   B. BEAMS AND COLUMNS:
      FORMED CONCRETE SURFACES FOR DRY CONDITIONS:
      STIRRUPS, SPIRALS, AND TIES.....1 1/2"
      PRINCIPAL REINFORCEMENT.....2"
      FORMED CONCRETE SURFACES EXPOSED TO WEATHER, IN CONTACT WITH SOIL OR WATER, OR BEAMS LOCATED OVER WATER:
      STIRRUPS AND TIES.....2"
      PRINCIPAL REINFORCEMENT.....2 1/2"
   C. WALLS:
      FORMED CONCRETE SURFACES FOR DRY CONDITIONS:
      #7 BARS AND SMALLER.....1"
      #8 BARS AND LARGER.....1 1/2"
      FORMED CONCRETE SURFACES EXPOSED TO WEATHER, OR IN CONTACT WITH SOIL OR WATER.....2"
   D. FOOTINGS AND BASE SLABS:
      FORMED VERTICAL CONCRETE SURFACES.....2"
      AT UNFORMED CONCRETE SURFACES CAST AGAINST THE SOIL OR CONCRETE WORK MATS.....3"
      TOP SURFACE OF FOOTINGS AND BASE SLABS.....SAME AS SLABS
8. KEYWAYS AND WATERSTOP SHALL END 3" BELOW THE TOP OF WALLS, UNLESS THERE IS A SLAB ON TOP OF THE WALL, IN WHICH CASE IT SHALL END AT THE BOTTOM OF THE SLAB. IN JOINTS WHERE WATERSTOP TERMINATES AT ADJOINING SLAB OR WALL, WATERSTOP SHALL BE EMBEDDED IN ADJOINING SLAB OR WALL A MINIMUM OF 6".
9. CONCRETE CURING SHALL BE IN ACCORDANCE WITH THE CONTRACT DOCUMENTS. WHERE WATER CURING IS REQUIRED, MEMBRANE CURING IS NOT ALLOWED. THE CONTRACTOR IS WARNED THAT WATER CURING IS DIFFICULT AT TIMES DUE TO WIND AND DRY CONDITIONS. THE CONTRACTOR SHALL STUDY REQUIREMENTS AND SHALL FURNISH ADEQUATE SYSTEMS TO PROVIDE WATER CURING WHERE REQUIRED. TOP OF WALLS SHALL BE KEPT VISIBLY MOIST AT ALL TIMES AND SHALL BE FLOODED NOT LESS THAN THREE TIMES DAILY.
10. WATERSTOP SHALL BE PLACED IN CONSTRUCTION, CONTRACTION, AND EXPANSION JOINTS IN WATERBEARING SLABS AND WALLS UNLESS OTHERWISE INDICATED ON THE DRAWINGS, AND IN WALLS AND SLABS SUBJECTED TO GROUNDWATER. WATERSTOP IN THE WALLS SHALL BE CARRIED INTO SLABS AND SHALL BE SPLICED WITH THE WATERSTOP IN THE SLABS.
11. NO BACKFILL SHALL BE PLACED AGAINST WALLS UNTIL CONCRETE HAS REACHED THE SPECIFIED STRENGTH AND THE CONNECTING SLABS AND BEAMS HAVE BEEN CAST AND HAVE REACHED THE SPECIFIED STRENGTH.
12. LAP SPLICES:
   A. WHEN MULTIPLE BARS ARE SPLICED AT THE SAME SECTION, THE CLEAR BAR SPACING IS THE MINIMUM CLEAR DISTANCE BETWEEN THE BARS OUTSIDE THE SPLICE LENGTH LESS ONE BAR DIAMETER.
   B. UNLESS OTHERWISE INDICATED ON THE DRAWINGS, THE BARS AT A LAP SPLICE SHALL BE IN CONTACT WITH EACH OTHER.
   C. FOLLOWING TABULATED VALUES ARE CALCULATED FOR:
      FY = 60,000 PSI FOR REINFORCING BARS
      F'C = 4,000 PSI FOR CONCRETE
   D. TOP BARS ARE HORIZONTAL REINFORCEMENT SO PLACED THAT MORE THAN 12 INCHES OF FRESH CONCRETE IS CAST IN THE MEMBER BELOW THE BAR.
   E. HORIZONTAL BARS IN CIRCULAR WALLS OF HYDRAULIC STRUCTURES SHALL BE SPLICED WITH TOP BAR LAP SPLICES. ADJACENT LAP SPLICES SHALL BE STAGGERED HORIZONTALLY BY NOT LESS THAN ONE LAP LENGTH NOR 3 FEET FROM CENTER OF LAP BELOW TO ADJACENT CENTER OF LAP ABOVE, AND SHALL NOT COINCIDE IN VERTICAL ARRAYS MORE FREQUENTLY THAN EVERY THIRD BAR.

REINFORCING BAR LAP SPLICE				
BAR SIZE	MINIMUM COVER (BAR DIA)	MINIMUM CLEAR BAR SPACING (BAR DIA)	LAP SPLICE LENGTH (INCHES)	
			TOP BARS	OTHER BARS
#4	MORE THAN 1	MORE THAN 2	32 *	25 *
	MORE THAN 2	MORE THAN 4	20	15
#5	MORE THAN 1	MORE THAN 2	40 *	31 *
	MORE THAN 2	MORE THAN 4	26	20
#6	MORE THAN 1	MORE THAN 2	48 *	37 *
	MORE THAN 2	MORE THAN 4	30	24
#7	MORE THAN 1	MORE THAN 2	70 *	54 *
	MORE THAN 2	MORE THAN 4	43	33
#8	MORE THAN 1	MORE THAN 2	81 *	62 *
	MORE THAN 2	MORE THAN 4	50	38
#9	MORE THAN 1	MORE THAN 2	90 *	70 *
	MORE THAN 2	MORE THAN 4	56	42
#10	MORE THAN 1	MORE THAN 2	104 *	81 *
	MORE THAN 2	MORE THAN 4	62	48
#11	MORE THAN 1	MORE THAN 2	114 *	88 *
	MORE THAN 2	MORE THAN 4	69	54

NOTES:

1. THE SPLICE LENGTH SHALL BE SELECTED ONLY WHEN BOTH REQUIREMENTS OF THE COVER AND BAR SPACING ARE SATISFIED.
2. * IF THE CLEAR SPACING IS LESS THAN OR EQUAL TO TWO BAR DIAMETERS OR THE COVER IS LESS THAN OR EQUAL TO ONE BAR DIAMETER, THE LAP SPLICE LENGTH SHALL BE INCREASED BY 50 PERCENT.

S101 TYP S — REINFORCED CONCRETE NOTES

08-01-04C

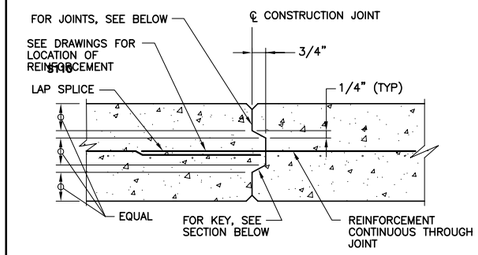

NON-WATER BEARING WALL OR SLAB

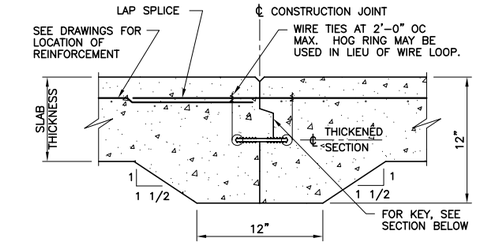

WATER BEARING SLAB LESS THAN 12" THICK

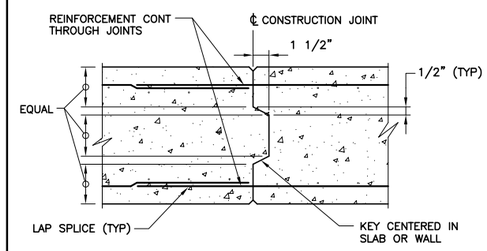

NON-WATER BEARING SLAB OR WALL

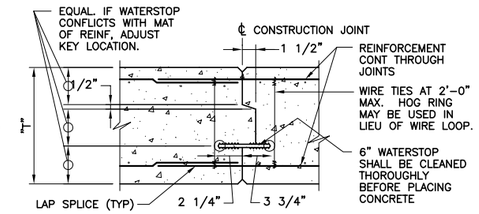

WATER BEARING SLAB OR WALL

NOTES:

1. SANDBLAST JOINT AND REINFORCEMENT PRIOR TO PLACING CONCRETE FOR NEXT SLAB OR WALL.
2. FOR WALLS, FORM ALL JOINT EDGES AT 1/4" CHAMFER.
3. FOR SLABS, EDGE TOP OF EXPOSED SLAB JOINT EDGES AT 1/4" RADIUS.
4. FOR UNDERSIDE OF EXPOSED SLABS, FORM JOINT EDGES AT 1/4" CHAMFER.

S110 TYP S — CONSTRUCTION JOINT

08-01-04C

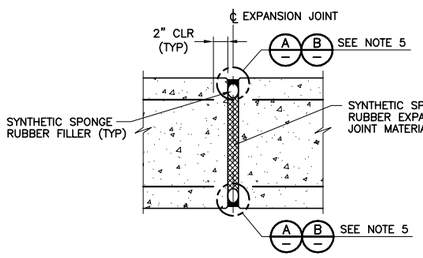

NON-WATER BEARING SLAB OR WALL

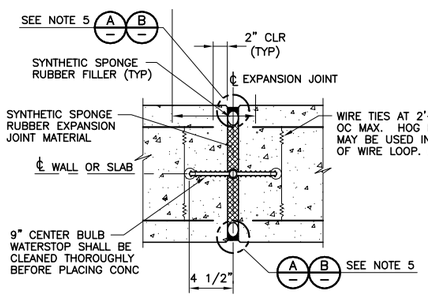

WATER BEARING SLAB OR WALL

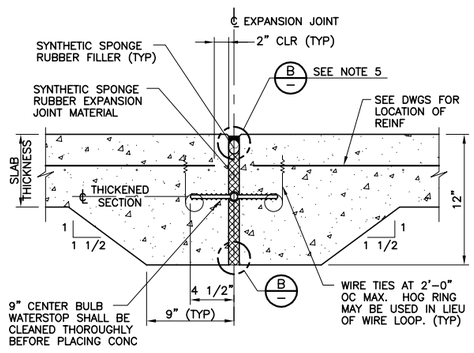

WATER BEARING SLAB LESS THAN 12" THICK

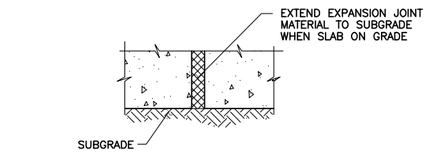

A DETAIL – SLAB ON GRADE

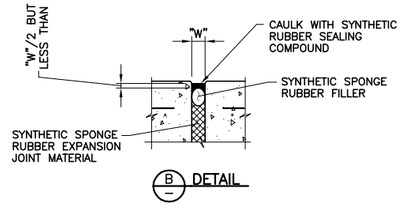

B DETAIL

NOTES:

1. FOR WALLS, FORM ALL JOINT EDGES AT 1/4" CHAMFER.
2. FOR SLABS, EDGE TOP OF EXPOSED SLAB JOINT EDGES AT 1/4" RADIUS.
3. FOR UNDERSIDE OF EXPOSED SLABS, FORM JOINT EDGES AT 1/4" CHAMFER.
4. "W" = 1" THICK UNLESS OTHERWISE INDICATED ON THE DRAWINGS. MIN JOINT WIDTH = 3/8".
5. USE A AT UNDERSIDE OF SLABS ON GRADE ONLY. USE B AT ALL OTHER LOCATIONS.

S130 TYP NS — EXPANSION JOINT

08-01-04C

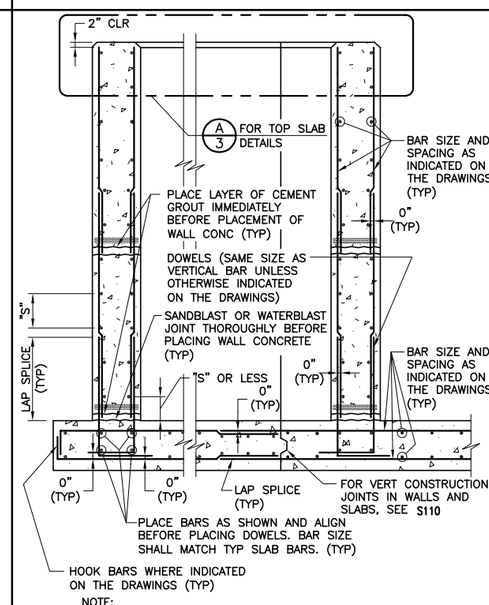

NOTE:
1. "S" = BAR SPACING INDICATED ON THE DRAWINGS.

WITHOUT WATERSTOP

S140 TYP S — WALL AND SLAB JOINTS

SHEET 1 OF 3 03-16-09

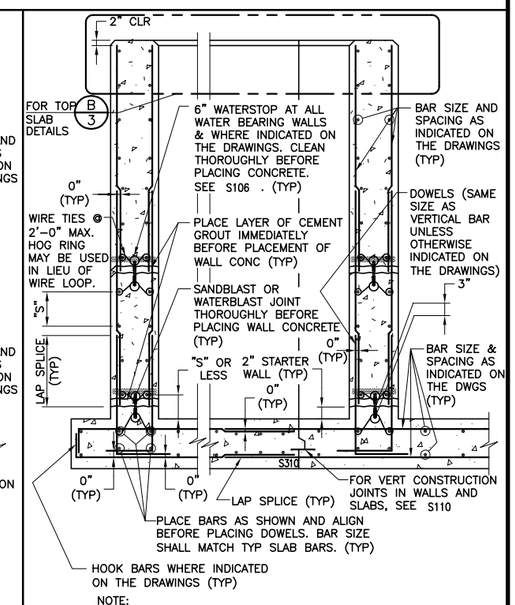

NOTE:
1. "S" = BAR SPACING INDICATED ON THE DRAWINGS.

WITH WATERSTOP

S140 TYP S — WALL AND SLAB JOINTS

SHEET 2 OF 3 03-16-09

REV	DATE	BY	DESCRIPTION

RECORD DRAWINGS

DESIGNED CE
DRAWN CE/RC
CHECKED CAG
DATE MAY 2012

DISCIPLINE ENGINEER: ** ORIGINAL SEALED BY MICHAEL J. HARTLAUB 12/07/11 C74901 **
PROJECT ENGINEER: ** ORIGINAL SEALED BY DARREN G. BAUNE 12/07/11 C68899 **
VICE PRESIDENT: ** ORIGINAL SEALED BY MICHAEL J. BRITTEN 12/07/11 C27729 **

carollo

CITY OF TURLOCK INC. 1908
STANISLAUS COUNTY, CALIFORNIA

HARDING DRAIN BYPASS
PUMP STATION AND PIPELINE
TYPICAL DETAILS
TYPICAL DETAILS STRUCTURAL

VERIFY SCALES
BAR IS ONE INCH ON ORIGINAL DRAWING
0 1"
IF NOT ONE INCH ON THIS SHEET, ADJUST SCALES ACCORDINGLY

JOB NO. 6918B.10
DRAWING NO. T-15
SHEET NO. 19 OF 107

Last Saved By: ALaico 8-25-14 01:37pm

FILENAME: C:\pw_working\projectwise\alaico\dms60465\T-00T015 8-25-14 01:38pm ALaico XREFS: G-BDR; Mjb; BEH; CA-MJB; CA-DGB; CA-MJH; CA-AEB; CA-GRS; CA-KAM; CA-ALM; CA-ALM_11-30-11; CA-DGB_11-30-11; CA-MJB_11-30-11 Turlock_City_LogoPMS_FNL;

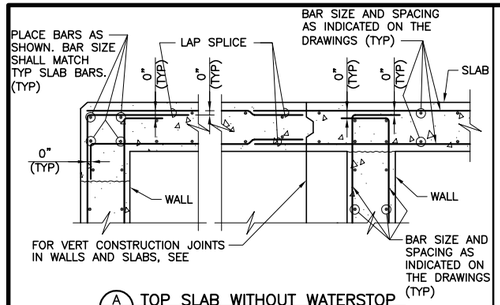

A/1 TOP SLAB WITHOUT WATERSTOP

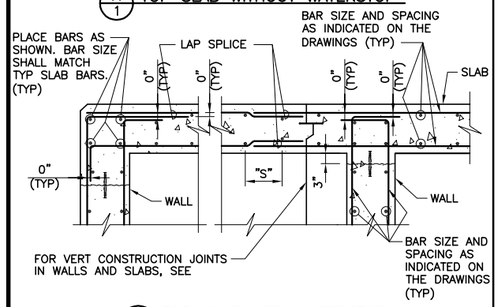

B/2 TOP SLAB WITH WATERSTOP

S140 TYP S — WALL AND SLAB JOINTS — SHEET 3 OF 3 — 03-16-09

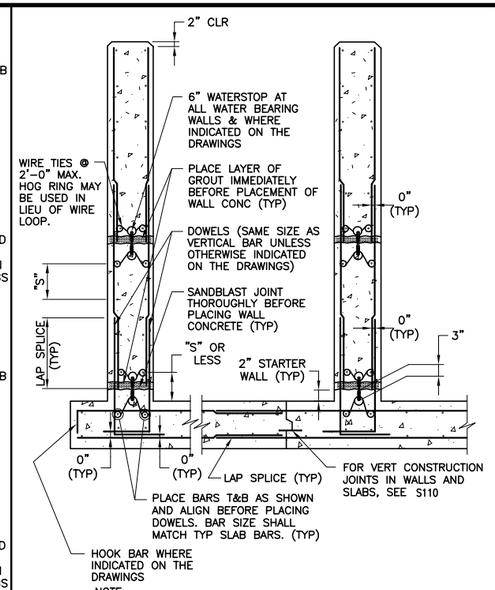

NOTE:
1. "S" = BAR SPACING INDICATED ON THE DRAWINGS

S141 TYP S — WALL AND SLAB JOINTS WITH WATERSTOP — 08-01-04C

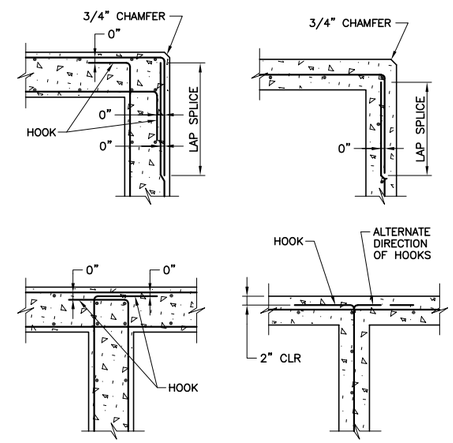

NOTE:
1. ALL HOOKS SHALL BE ACI STD 90 DEGREE HOOKS.

S144 TYP S — REINFORCEMENT AT CORNERS AND JUNCTIONS — 08-01-04C

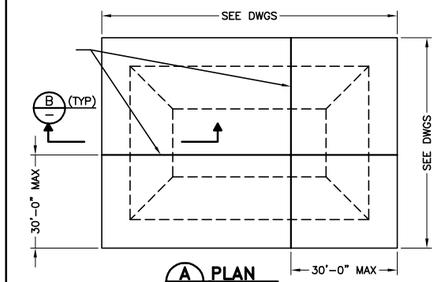

A PLAN

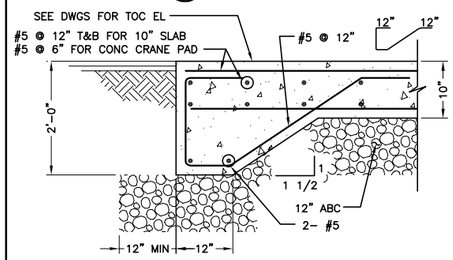

B SECTION

S160 TYP J — CONCRETE PAD — 09-21-07

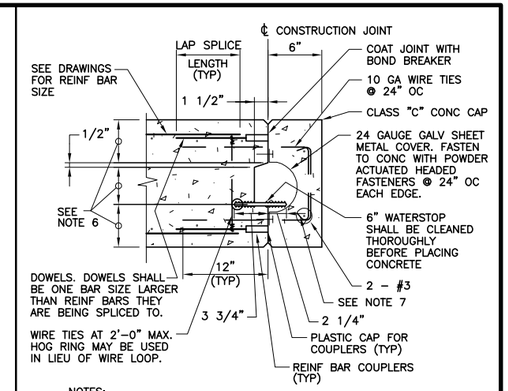

NOTES:
1. FOR WALLS, FORM ALL JOINT EDGES AT 1/4" CHAMFER.
2. FOR SLABS, EDGE TOP OF EXPOSED SLAB JOINT EDGES AT 1/4" RADIUS.
3. FOR UNDERSIDE OF EXPOSED SLABS, FORM JOINT EDGES AT 1/4" CHAMFER.
4. CONC COVER OVER REINF BARS AND REINF BAR COUPLERS PER S101 UNLESS OTHERWISE INDICATED ON THE DRAWINGS.
5. REINF BAR COUPLERS WITH FLANGES SHALL BE CLIPPED FLANGED TYPE WITH THE CLIPPED SIDE OF FLANGE LOCATED ON THE SIDE TOWARDS THE OUTSIDE FACE OF THE WALL OR SLAB.
6. EQUAL. IF WATERSTOP CONFLICTS WITH MAT OF REINF, ADJUST KEY LOCATION.
7. FIELD BEND 10 GA TIES AROUND #3 BARS AFTER SHEET METAL COVER INSTALLED OVER WATERSTOP.

S172 TYP N — FUTURE CONSTRUCTION JOINT WITH WATERSTOP — 08-01-04C

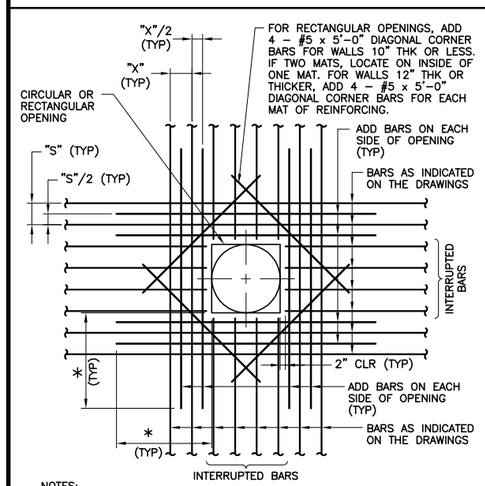

NOTES:
1. AREA OF ADD BARS AT EACH EDGE OF OPENING IN EACH DIRECTION SHALL MATCH 1/2 THE CROSS SECTIONAL AREA OF THE INTERRUPTED BARS.
2. PROVIDE STANDARD ACI HOOKS ON BARS IF STRAIGHT EXTENSION, PAST THE OPENING, CANNOT BE ACHIEVED.
3. PLACE ADD BARS IN SAME PLANES AS INTERRUPTED REINFORCING.
4. PLACE #5 DIAGONAL BARS UNDER INTERRUPTED REINFORCING.
5. * - DIMENSION EQUALS OPENING DIMENSION MEASURED PERPENDICULAR TO ADD BARS PLUS LAP SPLICE LENGTH.

S180 TYP NS — ADDITIONAL REINFORCING AT OPENINGS IN CONCRETE SLABS OR WALLS — 08-01-04C

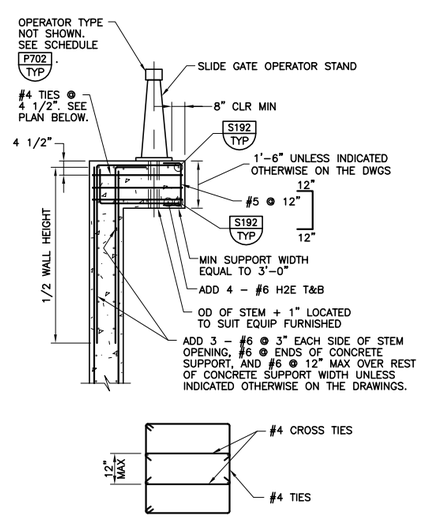

PLAN

NOTE:
1. MAX GATE SIZE 48" SQ.

S182 TYP N — CONCRETE SUPPORT FOR SLIDE GATE OPERATOR STAND — 07-31-08

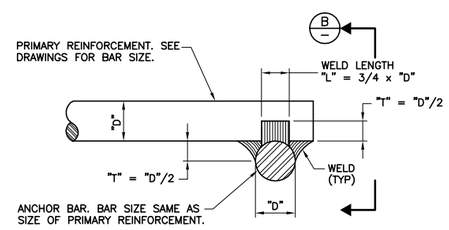

A SECTION

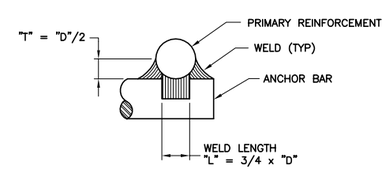

B ELEVATION

NOTES:
1. ANCHOR BAR FULL WIDTH OF PRIMARY REINFORCEMENT IN CORBEL.
2. SEE AWS D1.4 FOR WELDING PROCESS, PREHEAT REQUIREMENTS, AND OTHER DETAILS. SUBMIT WELDING PROCEDURE PER AWS.

S192 TYP — CORBEL ANCHOR BAR WELDING — 08-01-05

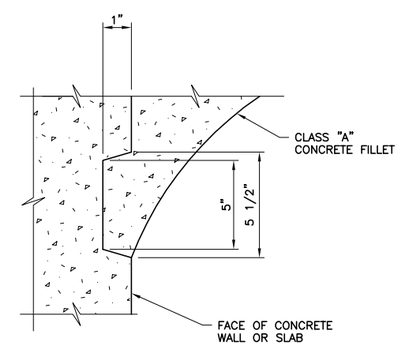

S196 TYP — KEY AT CONCRETE FILLET — 08-01-05

			RECORD DRAWINGS	DESIGNED CE	DISCIPLINE ENGINEER	** ORIGINAL SEALED BY MICHAEL J. HARTLAUB 12/07/11 C74901 **	PROJECT ENGINEER	** ORIGINAL SEALED BY DARREN G. BAUNE 12/07/11 C68899 **	VICE PRESIDENT	** ORIGINAL SEALED BY MICHAEL J. BRITTEN 12/07/11 C27729 **	carollo	CITY OF TURLOCK INC. 1908 STANISLAUS COUNTY, CALIFORNIA	HARDING DRAIN BYPASS PUMP STATION AND PIPELINE TYPICAL DETAILS TYPICAL DETAILS STRUCTURAL	VERIFY SCALES BAR IS ONE INCH ON ORIGINAL DRAWING 0 1" IF NOT ONE INCH ON THIS SHEET, ADJUST SCALES ACCORDINGLY	JOB NO. 6918B.10 DRAWING NO. T-16 SHEET NO. 20 OF 107
REV	DATE	BY	DESCRIPTION	DRAWN CE/RC											
				CHECKED CAG											
				DATE MAY 2012											

FILENAME: C:\pw_working\projectwise\alaico\dms60465\T-00T016 8-25-14 04:50pm ALaico XREFS: G-BDR; Mjb; BEH; CA-MJB; CA-DGB; CA-MJH; CA-AEB; CA-GRS; CA-KAM; CA-ALM; CA-ALM_11-30-11; CA-DGB_11-30-11; CA-MJB_11-30-11 Turlock_City_LogoPMS_FNL;

Last Saved By: ALaico 5-20-14 01:28pm

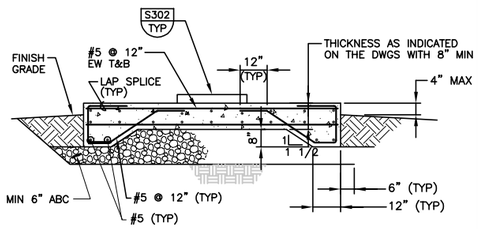

NOTES:

1. DIMENSION AS REQUIRED TO SUIT EQUIPMENT OR AS INDICATED ON THE DRAWINGS.

S300 TYP EQUIPMENT SLAB
07-31-08

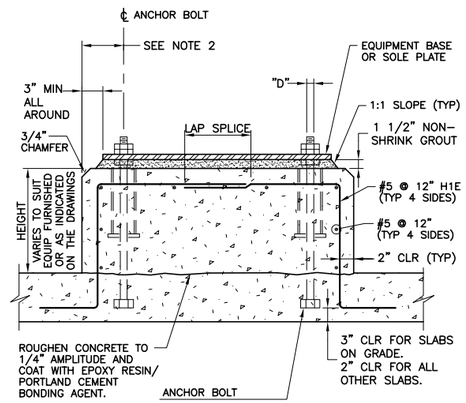

NOTES:

1. "D" = DIAMETER OF ANCHOR BOLT.
2. THE EDGE DISTANCE ON THE ANCHOR BOLTS SHALL NOT BE LESS THAN 6" OR 8 x "D".
3. WHERE CONCRETE SLAB OR BEAM THICKNESS WILL NOT ACCOMMODATE THE ANCHOR BOLT, PROVIDE EXTRA THICKNESS OR SLAB OR BEAM.

S302 TYP N EQUIPMENT BASE
04-30-07

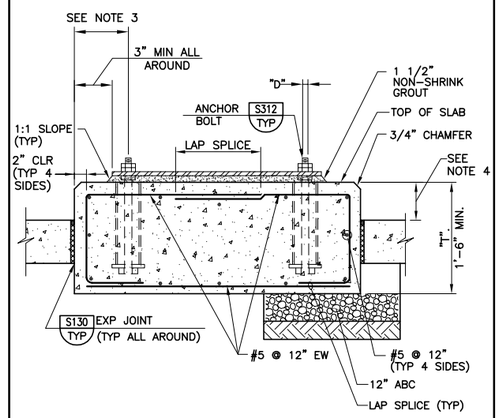

NOTES:

1. "D" = DIAMETER OF ANCHOR BOLT.
2. PAD DIMENSIONS AND ANCHOR BOLT SIZE SHALL CONFORM TO EQUIPMENT MANUFACTURER'S REQUIREMENTS.
3. THE EDGE DISTANCE ON THE ANCHOR BOLTS SHALL NOT BE LESS THAN 6" OR 8 x "D".
4. HEIGHT VARIES TO SUIT EQUIPMENT FURNISHED OR AS INDICATED ON THE DRAWINGS.

S306 TYP N ISOLATED EQUIPMENT PAD
04-30-07

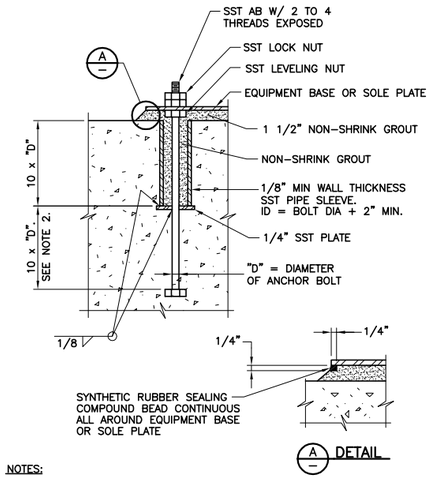

NOTES:

1. ANCHOR BOLT DIAMETER AS INDICATED ON THE DRAWINGS. IF NOT INDICATED ON THE DRAWINGS, THE ANCHOR BOLT SIZE SHALL BE AS RECOMMENDED BY THE EQUIPMENT MANUFACTURER.
2. WHERE CONCRETE SLAB OR BEAM THICKNESS WILL NOT ACCOMMODATE THE ANCHOR BOLT, PROVIDE EXTRA THICKNESS OF SLAB OR BEAM.
3. PREFABRICATED PLASTIC ANCHOR BOLT SLEEVE OPTIONAL.
4. DO NOT USE ALL THREAD RODS AS A SUBSTITUTE FOR BOLTS WITH A BOLT HEAD. SMOOTH RODS THREADED AT THE ENDS MAY BE USED IF ACCEPTABLE TO THE ENGINEER. DO NOT WELD NUTS TO THE THREADED RODS.

S310 TYP N ANCHOR BOLT
07-31-08

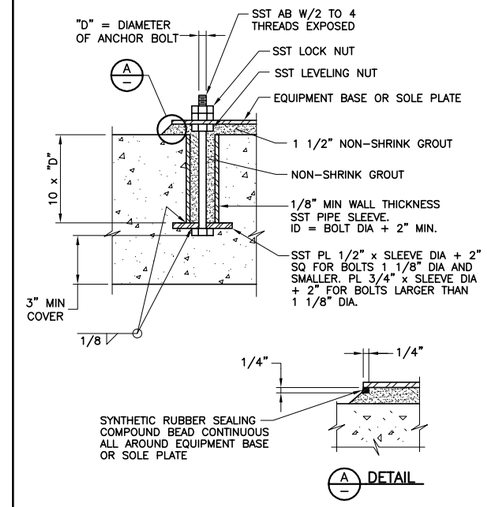

NOTES:

1. ANCHOR BOLT DIAMETER AS INDICATED ON THE DRAWINGS. IF NOT INDICATED ON THE DRAWINGS, THE ANCHOR BOLT SIZE SHALL BE SIZE PER THE DRAWINGS OR AS REQUIRED BY THE REQUIREMENTS BY 05120 AND SEISMIC CALCULATIONS PROVIDED BY THE EQUIPMENT MANUFACTURER.

S312 TYP ANCHOR BOLT
08-01-04C

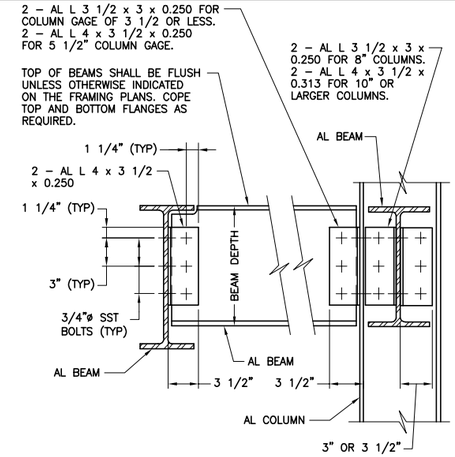

BEAM DEPTH (INCHES)	NUMBER OF BOLTS PER LEG
8 AND 10	2
12	3

NOTE:

1. SCHEDULE APPLIES TO ALL BEAMS UNLESS NUMBER OF BOLTS PER LEG IS OTHERWISE INDICATED ON THE FRAMING PLAN BY ⬡

S510 TYP ALUMINUM DOUBLE ANGLE BOLTED CONNECTION
08-01-05

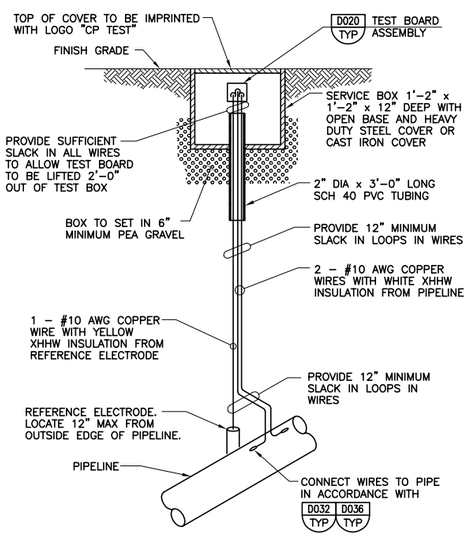

NOTE:

INSTALL PERSONNEL SAFETY GROUNDING MAT PER D018 TYP.

D001 TYP CORROSION MONITORING TEST STATION TYPE T
08-01-04C

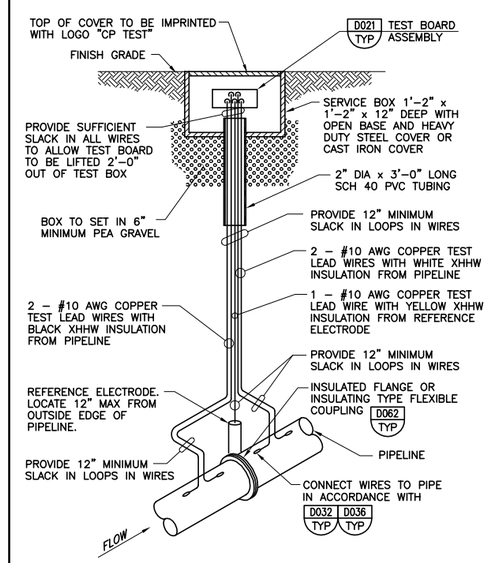

NOTE:

1. INSTALL PERSONNEL SAFETY GROUNDING MAT PER D018 TYP.

D002 TYP CORROSION MONITORING TEST STATION TYPE I
08-01-04C

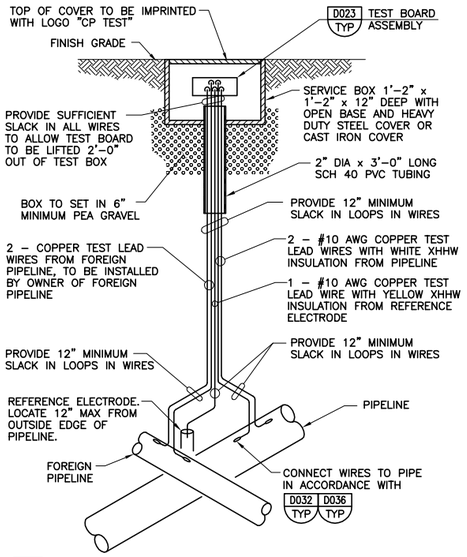

NOTE:

INSTALL PERSONNEL SAFETY GROUNDING MAT PER D018 TYP.

D004 TYP CORROSION MONITORING TEST STATION TYPE F
08-01-04C

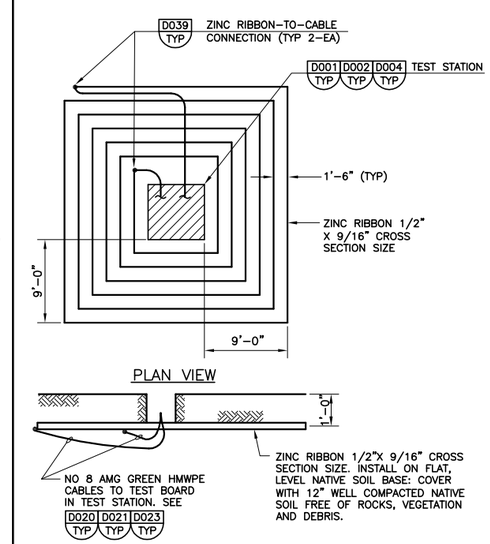

D018 TYP PERSONNEL SAFETY GROUNDING MAT AT TEST STATIONS
08-01-04C

REV	DATE	BY	DESCRIPTION
			RECORD DRAWINGS

DESIGNED CE
DRAWN CE/RC
CHECKED CAG
DATE MAY 2012

DISCIPLINE ENGINEER: ** ORIGINAL SEALED BY MICHAEL J. HARTLAUB 12/07/11 C74901 **
PROJECT ENGINEER: ** ORIGINAL SEALED BY DARREN G. BAUNE 12/07/11 C68899 **
VICE PRESIDENT: ** ORIGINAL SEALED BY MICHAEL J. BRITTEN 12/07/11 C27729 **

carollo

CITY OF TURLOCK INC. 1908
STANISLAUS COUNTY, CALIFORNIA

HARDING DRAIN BYPASS
PUMP STATION AND PIPELINE
TYPICALS
TYPICAL DETAILS
STURTURAL/CORROSION

VERIFY SCALES
BAR IS ONE INCH ON ORIGINAL DRAWING
0 1"
IF NOT ONE INCH ON THIS SHEET, ADJUST SCALES ACCORDINGLY

JOB NO. 6918B.10
DRAWING NO. T-17
SHEET NO. 21 OF 107

FILENAME: C:\pw_working\projectwise\alaico\dms60465\T-00T017 8-25-14 04:50pm ALaico XREFS: G-BDR; Mjb; BEH; CA-MJB; CA-DGB; CA-MJH; CA-AEB; CA-GRS; CA-KAM; CA-ALM; CA-ALM_11-30-11; CA-DGB_11-30-11; CA-MJB_11-30-11 Turlck_City_LogoPMS_FNL;

Last Saved By: Alaico 5-20-14 01:28pm

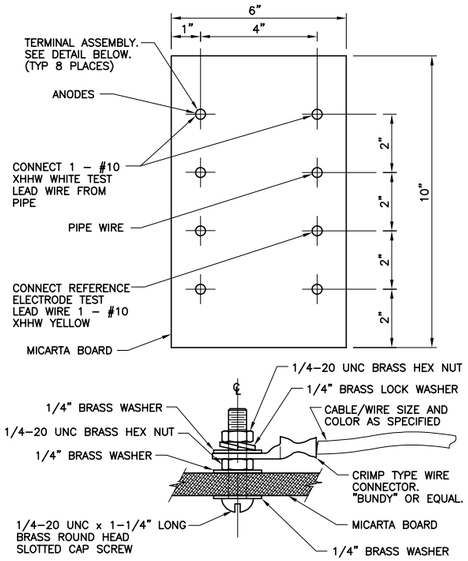

NOTE:

1. PROVIDE SUFFICIENT SLACK IN ALL WIRES SO THAT TEST BOARD CAN BE LIFTED 2'–0" OUT OF TEST BOX.

D020 TYP — TEST BOARD FOR TYPE T TEST STATION

08–01–04C

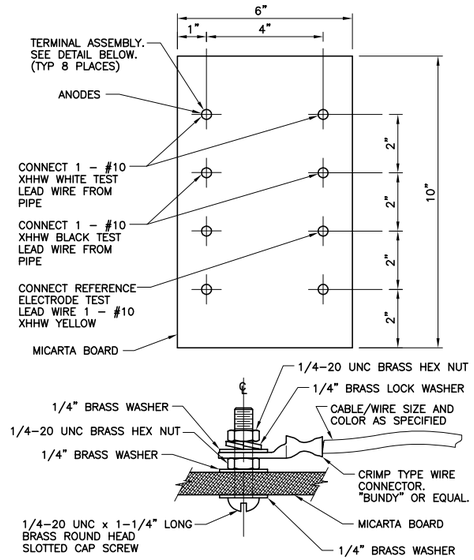

NOTE:

1. PROVIDE SUFFICIENT SLACK IN ALL WIRES SO THAT TEST BOARD CAN BE LIFTED 2'–0" OUT OF TEST BOX.

D021 TYP — TEST BOARD FOR TYPE I TEST STATION

08–01–04C

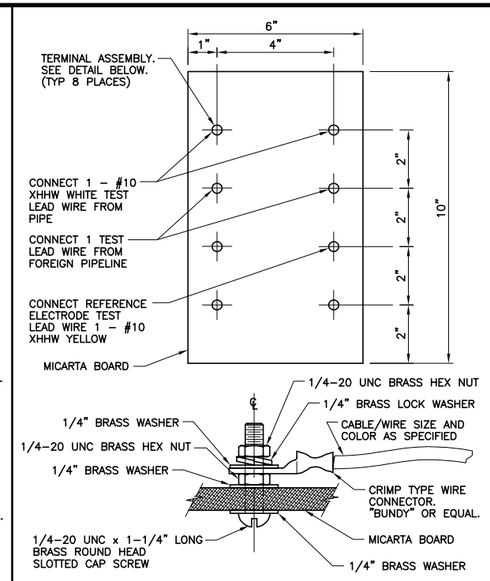

NOTE:

1. PROVIDE SUFFICIENT SLACK IN ALL WIRES SO THAT TEST BOARD CAN BE LIFTED 2'–0" OUT OF TEST BOX.

D023 TYP — TEST BOARD FOR TYPE F TEST STATION

08–01–04C

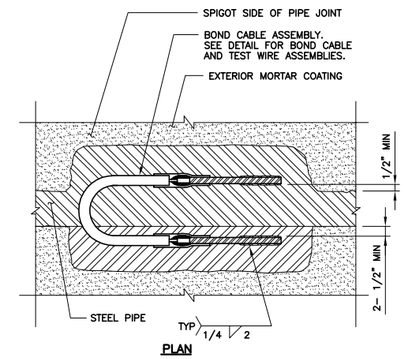

PLAN

NOTES:

1. REMOVE SUFFICIENT AMOUNT OF MORTAR COATING TO WELD ROD TO STEEL PIPE SURFACE.
2. REPAIR AREA WITH ADEQUATE THICKNESS OF NEW MORTAR COATING.
3. TEST LEAD WIRES TO BE INSTALLED IN SAME MANNER.

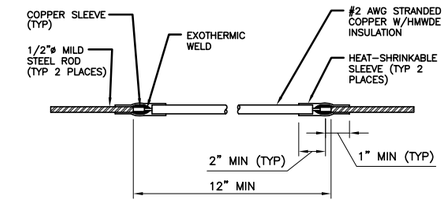

BOND CABLE ASSEMBLY

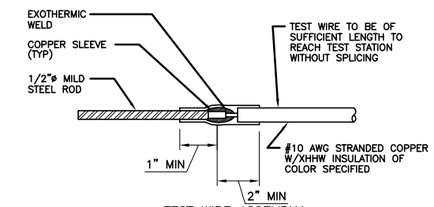

TEST WIRE ASSEMBLY

D032 TYP — PIPE JOINT BONDING AND TEST LEAD CONNECTIONS FOR MORTAR LINED AND COATED STEEL PIPE

12–14–05

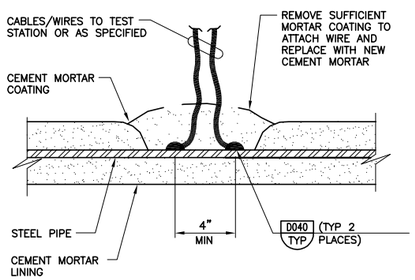

D035 TYP — CABLE/WIRE CONNECTIONS TO CEMENT MORTAR LINED AND CEMENT MORTAR COATED STEEL PIPE

08–01–04C

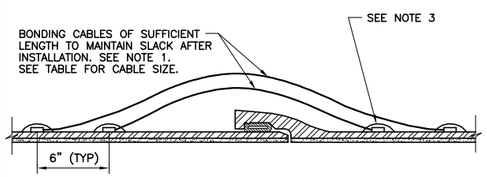

BELL AND SPIGOT RUBBER GASKET JOINT

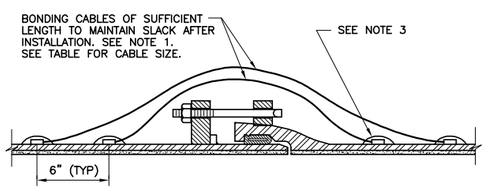

RESTRAINED JOINT OR EQUIVALENT

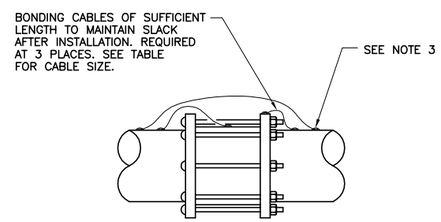

FLEXIBLE COUPLING OR EXPANSION JOINT

BONDING CABLE SIZES FOR DUCTILE IRON PIPE	
PIPE DIAMETER	CABLE SIZE
2" TO 6"	#8 AWG/HMWPE
8" TO 20"	#4 AWG/HMWPE
24" AND LARGER	#2 AWG/HMWPE

NOTES:

1. TWO BONDING CABLES REQUIRED FOR EACH PIPE JOINT. CABLES TO BE INSTALLED SEPARATELY, APPROX 6" APART ON PIPE.
2. IF TEST CABLES REQUIRED, INSTALL IN SAME MANNER AS BONDING CABLES.
3. BONDING CABLES CONNECTED TO PIPE AND/OR COUPLING PER D040 TYP.

D036 TYP — BONDING OF DUCTILE IRON PIPE JOINTS AND FITTINGS

08–01–04C

REV	DATE	BY	DESCRIPTION

RECORD DRAWINGS

DESIGNED CE
DRAWN CE/RC
CHECKED CAG
DATE MAY 2012

DISCIPLINE ENGINEER: ** ORIGINAL SEALED BY MICHAEL J. HARTLAUB 12/07/11 C74901 **
PROJECT ENGINEER: ** ORIGINAL SEALED BY DARREN G. BAUNE 12/07/11 C68899 **
VICE PRESIDENT: ** ORIGINAL SEALED BY MICHAEL J. BRITTEN 12/07/11 C27729 **

carollo

CITY OF TURLOCK INC. 1908
STANISLAUS COUNTY, CALIFORNIA

HARDING DRAIN BYPASS
PUMP STATION AND PIPELINE
TYPICALS
TYPICAL DETAILS CORROSION

VERIFY SCALES
BAR IS ONE INCH ON ORIGINAL DRAWING
0 1"
IF NOT ONE INCH ON THIS SHEET, ADJUST SCALES ACCORDINGLY

JOB NO. 6918B.10
DRAWING NO. T–18
SHEET NO. 22 OF 107

Last Saved By: ALaico 5–20–14 01:39pm

FILENAME: C:\pw_working\projectwise\alaico\dms60465\T-00T018 8-25-14 04:50pm ALaico XREFS: G-BDR; Mjb; BEH; CA-MJB; CA-DGB; CA-MJH; CA-AEB; CA-GRS; CA-KAM; CA-ALM; CA-ALM_11-30-11; CA-DGB_11-30-11; CA-MJB_11-30-11 Turlock_City_LogoPMS_FNL;

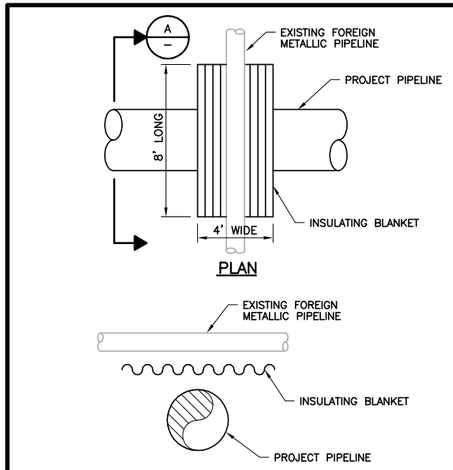

NOTES:

1. INSTALL INSULATING CORRUGATED FIBERGLASS SHEET BETWEEN METALLIC PIPELINES.
2. CORRUGATED FIBERGLASS SHEET SHALL BE 48 INCHES WIDE x 8 FEET LONG.
3. CORRUGATED FIBERGLASS SHEET SHALL BE INSTALLED ON BACKFILL AND CENTERED BETWEEN THE PIPES.

D037 TYP — INSULATING SHEET BETWEEN PIPELINES

08-01-04

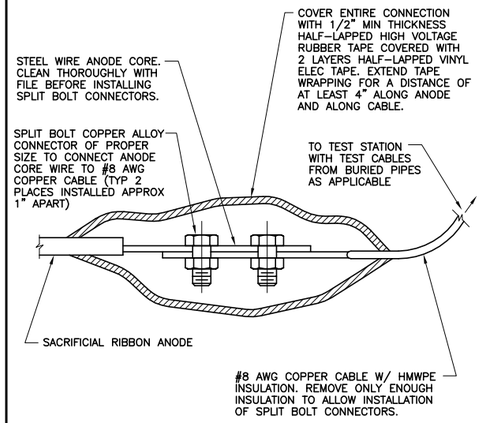

D039 TYP — CABLE CONNECTION TO SACRIFICIAL RIBBON ANODE

08-01-04C

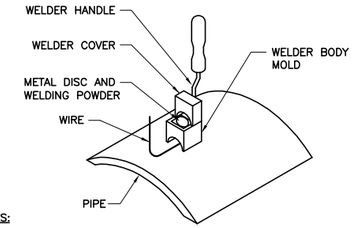

NOTES:

1. PLACE METAL DISC IN BOTTOM OF MOLD BEFORE POURING WELDING POWDER INTO MOLD.
2. INSTALLATION STEPS:

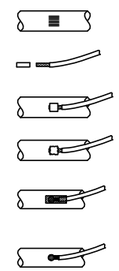

A. FILE CONNECTION AREA (3" x 3") TO BARE SHINY METAL AND CLEAN.

B. STRIP INSULATION FROM WIRE. INSTALL COPPER SLEEVE AS REQUIRED.

C. HOLD WELDER FIRMLY WITH OPENING AWAY FROM FACE AND IGNITE WITH FLINT GUN. WEAR GLOVES TO PROTECT HANDS.

D. REMOVE SLAG FROM CONNECTION AND PEEN WELD FOR SOUNDNESS.

E. FOR CONNECTION TO MORTAR COATED STEEL PIPE, COVER CONNECTION WITH COAL TAR MASTIC BEFORE REPAIRING MORTAR COATING.

F. FOR CONNECTIONS TO DUCTILE IRON PIPE, COVER CONNECTION WITH THERMIT WELD CAP, MAKING CERTAIN THAT ALL COPPER IS COVERED. COAT ENTIRE WELD AREA WITH COAL TAR MASTIC.

D040 TYP — EXOTHERMIC WELDING PROCEDURES CABLE TO PIPE CONNECTIONS

08-01-04C

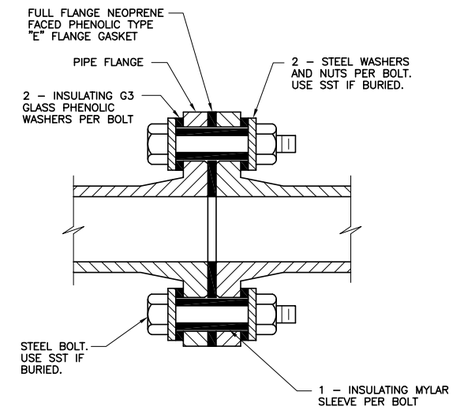

NOTE:

1. IF FLANGE IS TO BE BURIED, COAT ENTIRE ASSEMBLY WITH PETROLATUM SATURATED FABRIC TAPE WRAP SYSTEM IN ACCORDANCE WITH THE SPECIFICATIONS.
2. THE USE OF ALL-THREAD BOLTS IS NOT ALLOWED.

D062 TYP — PIPE FLANGE INSULATION

08-01-04C

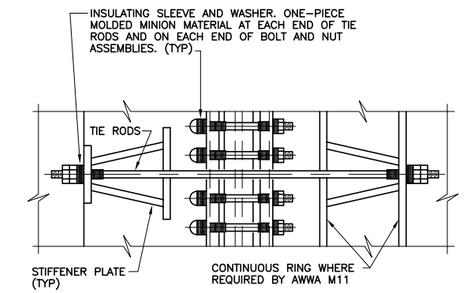

NOTE:

1. SEE P112 TYP FOR ADDITIONAL DETAILS.

D150 TYP — INSULATING OF RESTRAINED FLEXIBLE COUPLING

08-01-04C

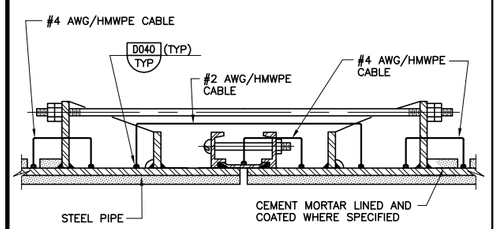

NOTE:

1. SEE P112 TYP FOR ADDITIONAL DETAILS.

D200 TYP — BONDING OF RESTRAINED FLEXIBLE COUPLING

08-01-04C

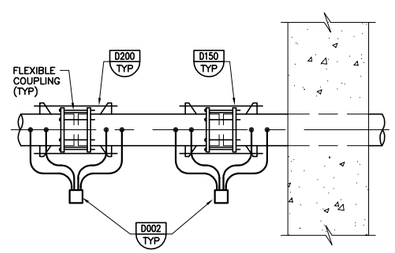

NOTE:

1. SEE TYPICAL DETAIL P346 FOR ADDITIONAL DETAILS.

D300 TYP — CORROSION PROTECTION FOR UNDERGROUND PIPING

R 10-31-03

REV	DATE	BY	DESCRIPTION

RECORD DRAWINGS

DESIGNED	CE
DRAWN	CE/RC
CHECKED	CAG
DATE	MAY 2012

DISCIPLINE ENGINEER: ** ORIGINAL SEALED BY MICHAEL J. HARTLAUB 12/07/11 C74901 **

PROJECT ENGINEER: ** ORIGINAL SEALED BY DARREN G. BAUNE 12/07/11 C68899 **

VICE PRESIDENT: ** ORIGINAL SEALED BY MICHAEL J. BRITTEN 12/07/11 C27729 **

carollo

CITY OF TURLOCK INC. 1908

STANISLAUS COUNTY, CALIFORNIA

HARDING DRAIN BYPASS

PUMP STATION AND PIPELINE

TYPICALS

TYPICAL DETAILS CORROSION

VERIFY SCALES: BAR IS ONE INCH ON ORIGINAL DRAWING 0 — 1" IF NOT ONE INCH ON THIS SHEET, ADJUST SCALES ACCORDINGLY

JOB NO. 6918B.10

DRAWING NO. T-19

SHEET NO. 23 OF 107

Last Saved By: dthung 5-14-12 09:22am

FILENAME: C:\pw_working\projectwise\alaico\dms60465\T-00T019 8-25-14 04:51pm ALaico XREFS: G-BDR; Mjb; BEH; CA-MJB; CA-DGB; CA-MJH; CA-AEB; CA-GRS; CA-KAM; CA-ALM; CA-ALM_11-30-11; CA-DGB_11-30-11; CA-MJB_11-30-11 Turlock_City_LogoPMS_FNL;

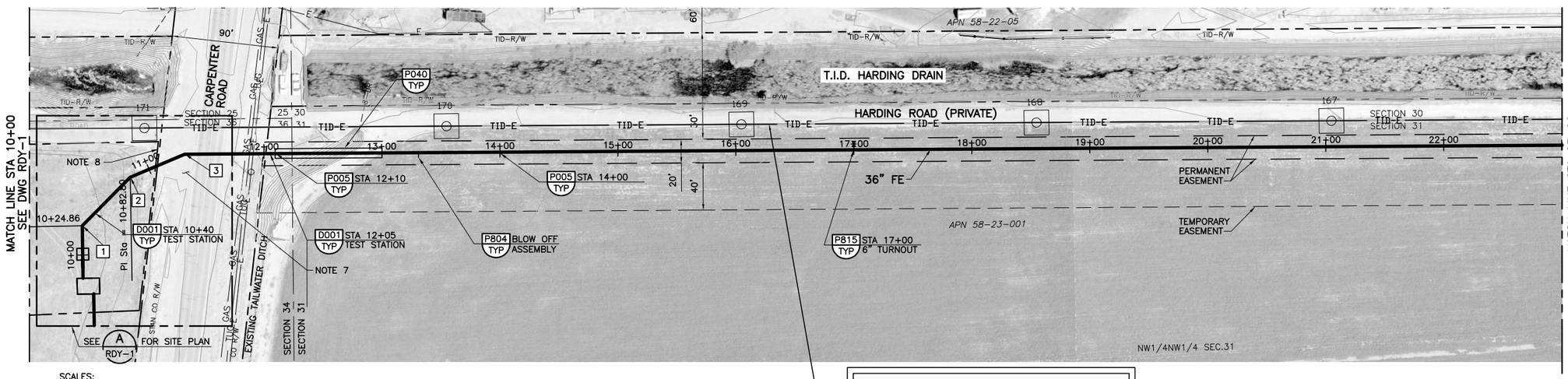

SCALES:
1" = 50' HORIZ
1" = 5' VERT

CAUTION:
CONTRACTOR SHALL TAKE CAUTION WHEN WORKING NEAR TURLOCK IRRIGATION DISTRICT'S (TID) 115KV POWER LINE. CONTRACTOR SHALL CONTACT TID PRIOR TO BEGINNING WORK TO DETERMINE ALL REQUIREMENTS FOR WORKING NEAR THE UTILITY. CONTRACTOR SHALL PROVIDE SAFETY TRAINING FOR ALL PERSONNEL OPERATING EQUIPMENT OR WORKING NEAR THE UTILITY.

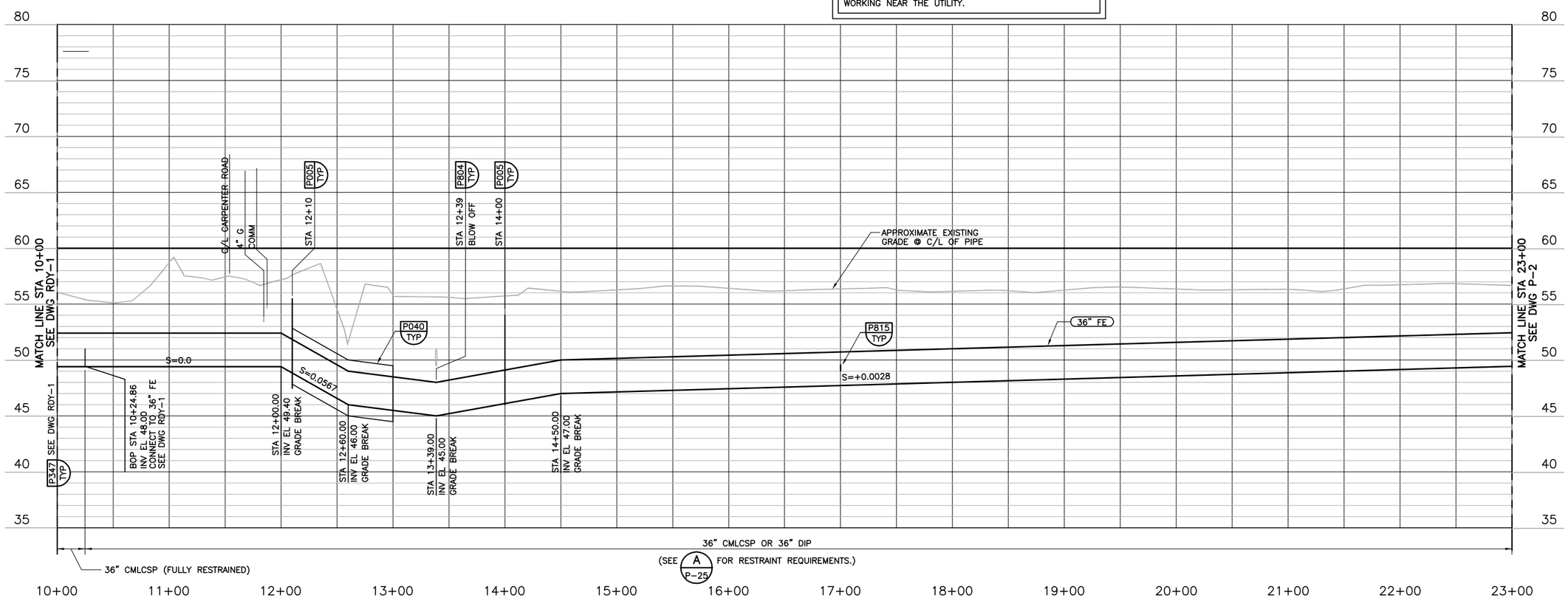

1 BOP = 10+24.86
N = 1991847.63
E = 6407399.24
45° HORIZ BEND

2 PI STA = 10+82.80
N = 1991888.15
E = 6407440.65
22.5° HORIZ BEND

3 PI STA = 11+32.95
N = 1991906.83
E = 6407487.19
22.5° HORIZ BEND

LEGEND:

- TID-E — NEW POLES AND WIRES (TID=TURLOCK IRRIGATION DISTRICT).
- TE — TE — LOCAL OVERHEAD TELEPHONE AND ELECTRICAL LINES ON SAME POLES.
- E — E — OVERHEAD ELECTRIC LINES.
- TUG — UNDERGROUND TELEPHONE
- 115KV STEEL TOWERS AT ANGLE OR WOOD ON STRAIGHT ALIGNMENTS.
  - TID EASEMENT AROUND POLE

NOTES:

1. ALL GENERAL NOTES SHOWN ON DRAWING G-2 APPLY TO THIS DRAWING.
2. CONTRACTOR SHALL TAKE CAUTION WHEN WORKING NEAR TURLOCK IRRIGATION DISTRICT'S (TID) 115KV POWER LINE. CONTRACTOR SHALL CONTACT TID PRIOR TO BEGINNING WORK TO DETERMINE ALL REQUIREMENTS FOR WORKING NEAR THE UTILITY. CONTRACTOR SHALL PROVIDE SAFETY TRAINING FOR ALL PERSONNEL OPERATING EQUIPMENT OR WORKING NEAR THE UTILITY.
3. TRENCH SHORING IS REQUIRED FOR 36" FE PIPE INSTALLATION FROM STATION 10+50.06 TO STATION 305+00. SEE SPECIFICATION 02260.
4. HARDING ROAD IS PRIVATE WAY FROM CARPENTER ROAD TO CROWS LANDING ROAD.
5. CONTRACTOR SHALL BOND ALL PIPE JOINTS AND FITTINGS (DUCTILE OR STEEL) PER CATHODIC PROTECTION TYPICAL DETAILS.
6. CONTRACTOR SHALL RESTRAIN ALL FITTINGS WITH DEFLECTION GREATER THAN 5 DEGREES PER DETAIL A ON DRAWING P-25.
7. CONTRACTOR SHALL INSTALL THE 36" FE WITHIN THE CARPENTER ROAD RIGHT OF WAY PER P003 TYP.
8. REMOVE AND REPLACE EXISTING 15' STEEL GATE
9. CONTRACTOR TO MAINTAIN ACCESS TO THE SAN JOAQUIN LEVEE ROAD FOR TID, TURLOCK AND OTHER.

AVOID CUTTING UNDERGROUND UTILITY LINES. IT'S COSTLY.
Call before you Dig
1-800-227-2600
UNDERGROUND SERVICE (USA)

REV	DATE	BY	DESCRIPTION
			RECORD DRAWINGS

DESIGNED PIO
DRAWN PAT
CHECKED BEH
DATE MAY 2012

DISCIPLINE ENGINEER: ** ORIGINAL SEALED BY MICHAEL J. HARTLAUB 12/07/11 C74901 **
PROJECT ENGINEER: ** ORIGINAL SEALED BY DARREN G. BAUNE 12/07/11 C68899 **
VICE PRESIDENT: ** ORIGINAL SEALED BY MICHAEL J. BRITTEN 12/07/11 C27729 **

carollo

CITY OF TURLOCK INC. 1908
STANISLAUS COUNTY, CALIFORNIA

HARDING DRAIN BYPASS
PUMP STATION AND PIPELINE
CIVIL
PIPELINE PLAN & PROFILE
STATION 10+00 TO STATION 23+00

VERIFY SCALES
BAR IS ONE INCH ON ORIGINAL DRAWING
0 1"
IF NOT ONE INCH ON THIS SHEET, ADJUST SCALES ACCORDINGLY

JOB NO. 6918B.10
DRAWING NO. P-1
SHEET NO. 24 OF 107

FILENAME: C:\pw_working\projectwise\alaico\dms60458\RCp01001 8-25-14 04:52pm ALaico XREFS: plan; G-BDR; UTILITY; Turlock; outfallgrid; rcprf001; Alignment; pipeline; ADDTOPO-OF; S-01S101; Mjb; BEH; PIO; CA-MJB; CA-DGB; CA-MJH; CA-AEB; CA-GRS; CA-KAM; NEWTID; CA-ALM; CA-ALM_11-30-11; CA-DGB_11-30-11; CA-MJB_11-30-11; M-02M202 SADI0002; SADI0003; Turlock_City_LogoPMS_FNL;

Last Saved By: ALaico 8-25-14 04:52pm

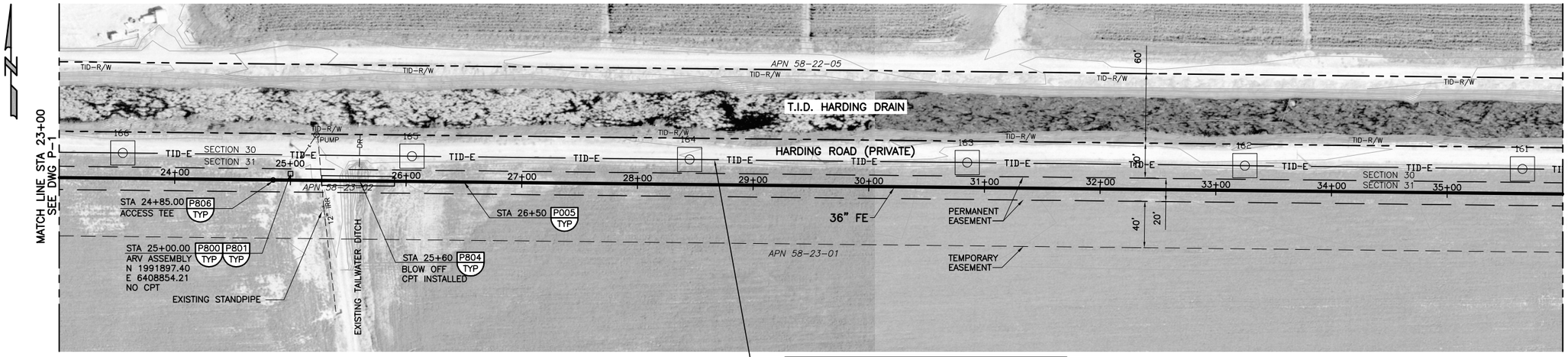

SCALES:
1" = 50' HORIZ
1" = 5' VERT

CAUTION:
CONTRACTOR SHALL TAKE CAUTION WHEN WORKING NEAR TURLOCK IRRIGATION DISTRICT'S (TID) 115KV POWER LINE. CONTRACTOR SHALL CONTACT TID PRIOR TO BEGINNING WORK TO DETERMINE ALL REQUIREMENTS FOR WORKING NEAR THE UTILITY. CONTRACTOR SHALL PROVIDE SAFETY TRAINING FOR ALL PERSONNEL OPERATING EQUIPMENT OR WORKING NEAR THE UTILITY.

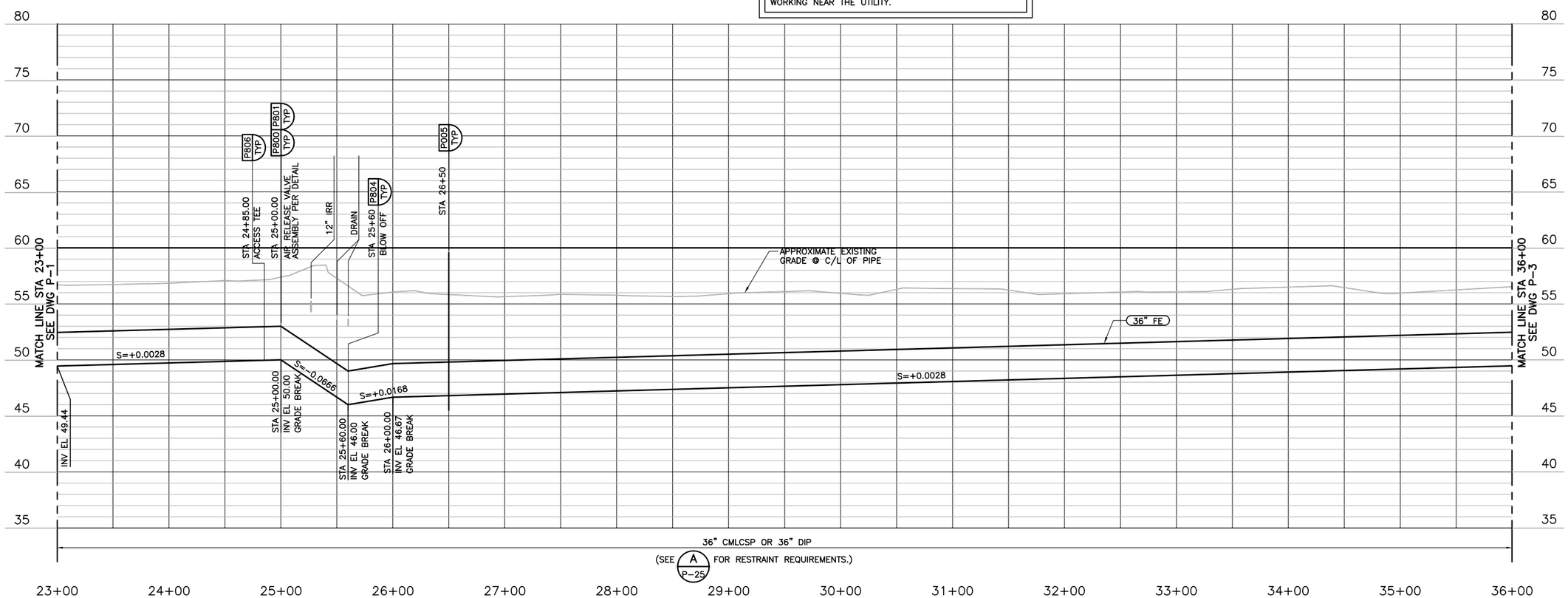

LEGEND:

- TID-E — NEW POLES AND WIRES (TID=TURLOCK IRRIGATION DISTRICT).
- TE — LOCAL OVERHEAD TELEPHONE AND ELECTRICAL LINES ON SAME POLES.
- E — OVERHEAD ELECTRIC LINES.
- TUG — UNDERGROUND TELEPHONE
- 115KV STEEL TOWERS AT ANGLE OR WOOD ON STRAIGHT ALIGNMENTS.
- TID EASEMENT AROUND POLE

NOTES:

1. ALL GENERAL NOTES SHOWN ON DRAWING G-2 APPLY TO THIS DRAWING.
2. CONTRACTOR SHALL TAKE CAUTION WHEN WORKING NEAR TURLOCK IRRIGATION DISTRICT'S (TID) 115KV POWER LINE. CONTRACTOR SHALL CONTACT TID PRIOR TO BEGINNING WORK TO DETERMINE ALL REQUIREMENTS FOR WORKING NEAR THE UTILITY. CONTRACTOR SHALL PROVIDE SAFETY TRAINING FOR ALL PERSONNEL OPERATING EQUIPMENT OR WORKING NEAR THE UTILITY.
3. TRENCH SHORING IS REQUIRED FOR 36" FE PIPE INSTALLATION FROM STATION 10+50.06 TO STATION 305+00. SEE SPECIFICATION 02260.
4. HARDING ROAD IS PRIVATE WAY FROM CARPENTER ROAD TO CROWS LANDING ROAD.
5. CONTRACTOR SHALL BOND ALL PIPE JOINTS AND FITTINGS (DUCTILE OR STEEL) PER CATHODIC PROTECTION TYPICAL DETAILS.
6. CONTRACTOR SHALL RESTRAIN ALL FITTINGS WITH DEFLECTION GREATER THAN 5 DEGREES PER DETAIL A ON DRAWING P-25.

AVOID CUTTING UNDERGROUND UTILITY LINES. IT'S COSTLY.
Call before you Dig
1-800-227-2600
UNDERGROUND SERVICE (USA)

RECORD DRAWINGS

REV	DATE	BY	DESCRIPTION

DESIGNED PIO
DRAWN PAT
CHECKED BEH
DATE MAY 2012

DISCIPLINE ENGINEER: ** ORIGINAL SEALED BY MICHAEL J. HARTLAUB 12/07/11 C74901 **
PROJECT ENGINEER: ** ORIGINAL SEALED BY DARREN G. BAUNE 12/07/11 C68899 **
VICE PRESIDENT: ** ORIGINAL SEALED BY MICHAEL J. BRITTEN 12/07/11 C27729 **

carollo

CITY OF TURLOCK INC. 1908
STANISLAUS COUNTY, CALIFORNIA

HARDING DRAIN BYPASS
PUMP STATION AND PIPELINE
CIVIL
PIPELINE PLAN & PROFILE
STATION 23+00 TO STATION 36+00

VERIFY SCALES
BAR IS ONE INCH ON ORIGINAL DRAWING
0 1"
IF NOT ONE INCH ON THIS SHEET, ADJUST SCALES ACCORDINGLY

JOB NO. 6918B.10
DRAWING NO. P-2
SHEET NO. 25 OF 107

FILENAME: C:\pw_working\projectwise\alaico\dms60458\RCp02001 8-25-14 04:53pm ALaico XREFS: plan; G-BDR; UTILITY; Turlock; outfallgrid; rcprf001; Alignment; pipeline; ADDTOPO-OF; PIO; PIO-SIGN; S-01S101; NEWTID; Mjb; BEH; CA-MJB; CA-DGB; CA-MJH; CA-AEB; CA-GRS; CA-KAM; CA-ALM; CA-ALM_11-30-11; CA-DGB_11-30-11; CA-MJB_11-30-11; M-02M202 SADI0003; SADI0004; Turlck_City_LogoPMS_FNL;

Last Saved By: ALaico 8-25-14 04:53pm

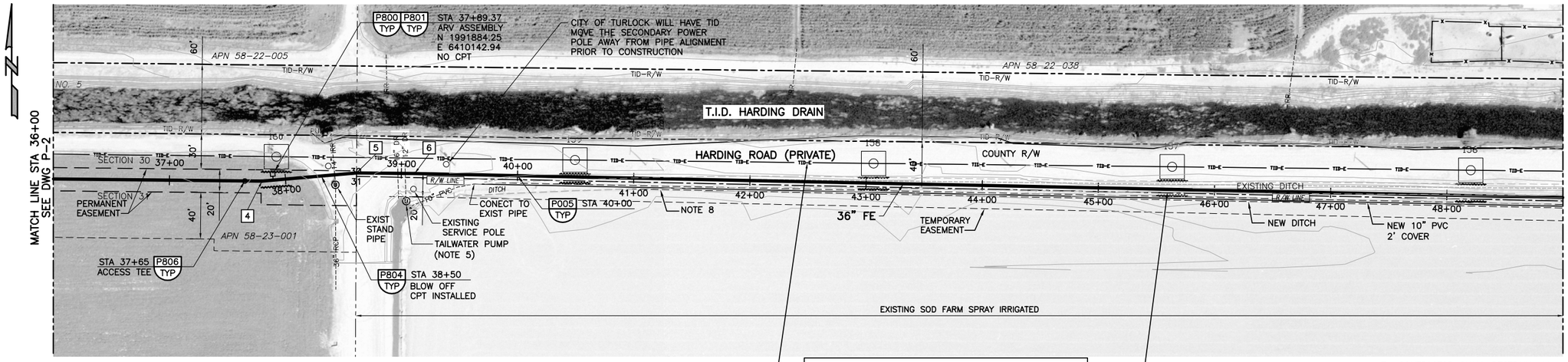

4 PI STA = 37+79.77
N = 1991877.93
E = 6410133.85
5.625° HORIZ DEF

5 PI STA = 38+61.39
N = 1991885.04
E = 6410215.16
5.625° HORIZ DEF

6 PI STA = 39+11.39
N = 1991884.50
E = 6410265.16
0.57° HORIZ DEF

SCALES:
1" = 50' HORIZ
1" = 5' VERT

CAUTION:
CONTRACTOR SHALL TAKE CAUTION WHEN WORKING NEAR TURLOCK IRRIGATION DISTRICT'S (TID) 115KV POWER LINE. CONTRACTOR SHALL CONTACT TID PRIOR TO BEGINNING WORK TO DETERMINE ALL REQUIREMENTS FOR WORKING NEAR THE UTILITY. CONTRACTOR SHALL PROVIDE SAFETY TRAINING FOR ALL PERSONNEL OPERATING EQUIPMENT OR WORKING NEAR THE UTILITY.

INSTALL TRENCH SHORING 15 FEET BEYOND EACH SIDE OF POWER POLE PER SPEC 02260 1.04.B.4. (TYP)

7. CONTRACTOR SHALL RESTRAIN ALL FITTINGS WITH DEFLECTION GREATER THAN 5 DEGREES PER DETAIL A ON DRAWING P-25.
8. CONTRACTOR TO REPAIR AND RESTORE DITCH AFTER CONSTRUCTION.
9. NEW 10" PVC PIPE SHALL BE SDR-18 IPS PRESSURE PIPE PER ASTM 2241.

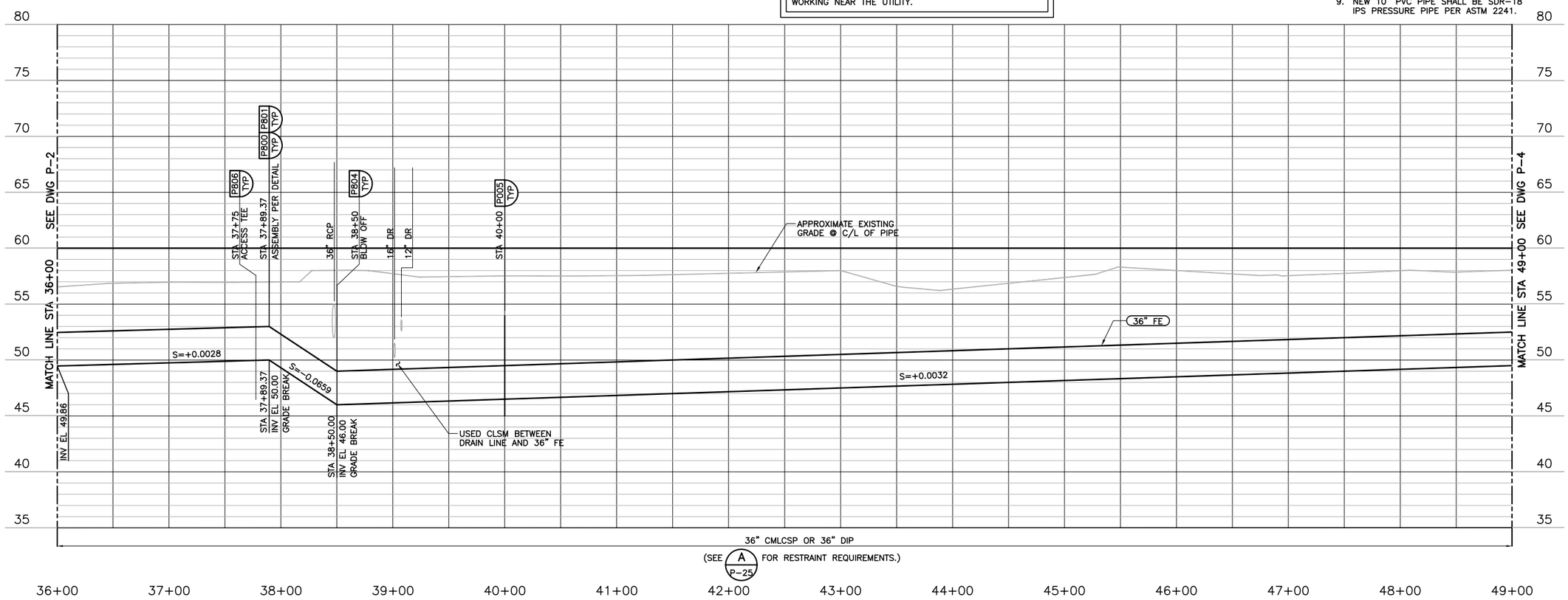

LEGEND:

- — TID-E — NEW POLES AND WIRES (TID=TURLOCK IRRIGATION DISTRICT).
- — TE — TE — LOCAL OVERHEAD TELEPHONE AND ELECTRICAL LINES ON SAME POLES.
- — E — E — OVERHEAD ELECTRIC LINES.
- — TUG — UNDERGROUND TELEPHONE
- 115KV STEEL TOWERS AT ANGLE OR WOOD ON STRAIGHT ALIGNMENTS.
- TID EASEMENT AROUND POLE
- SHORING REQUIRED

NOTES:

1. ALL GENERAL NOTES SHOWN ON DRAWING G-2 APPLY TO THIS DRAWING.
2. CONTRACTOR SHALL TAKE CAUTION WHEN WORKING NEAR TURLOCK IRRIGATION DISTRICT'S (TID) 115KV POWER LINE. CONTRACTOR SHALL CONTACT TID PRIOR TO BEGINNING WORK TO DETERMINE ALL REQUIREMENTS FOR WORKING NEAR THE UTILITY. CONTRACTOR SHALL PROVIDE SAFETY TRAINING FOR ALL PERSONNEL OPERATING EQUIPMENT OR WORKING NEAR THE UTILITY.
3. TRENCH SHORING IS REQUIRED FOR 36" FE PIPE INSTALLATION FROM STATION 10+50.06 TO STATION 305+00. SEE SPECIFICATION 02260.
4. HARDING ROAD IS PRIVATE WAY FROM CARPENTER ROAD TO CROWS LANDING ROAD.
5. TAILWATER DITCHES ON NORTH AND WEST EDGES OF SOD FIELD ARE IN CONTINUOUS USE. TAILWATER PUMP IN PRECAST CONCRETE STRUCTURES RETURNS FLOW TO LAGOON DIRECTLY SOUTH OF STATION 53+00 VIA THE 10" PVC PIPELINE BENEATH THE NORTHERN TAILWATER DITCH. CONTRACTOR SHALL TEMPORARILY REMOVE TAILWATER PUMP AND FEATURES AS REQUIRED FOR PIPELINE CONSTRUCTION. CONTRACTOR SHALL PROVIDE FOR CONTINUED DELIVERY OF TAILWATER TO THE LAGOON DURING CONSTRUCTION. CONTRACTOR SHALL REINSTALL PUMP, MANIFOLD, UTILITY SERVICE AND ALL OTHER RELATED APPURTENANCES TO PRE-CONSTRUCTION CONDITIONS.
6. CONTRACTOR SHALL BOND ALL PIPE JOINTS AND FITTINGS (DUCTILE OR STEEL) PER CATHODIC PROTECTION TYPICAL DETAILS.

AVOID CUTTING UNDERGROUND UTILITY LINES. IT'S COSTLY.
Call before you Dig
1-800-227-2600
UNDERGROUND SERVICE (USA)

REV	DATE	BY	DESCRIPTION
			RECORD DRAWINGS

DESIGNED PIO
DRAWN PAT
CHECKED BEH
DATE MAY 2012

DISCIPLINE ENGINEER: ** ORIGINAL SEALED BY MICHAEL J. HARTLAUB 12/07/11 C74901 **
PROJECT ENGINEER: ** ORIGINAL SEALED BY DARREN G. BAUNE 12/07/11 C68899 **
VICE PRESIDENT: ** ORIGINAL SEALED BY MICHAEL J. BRITTEN 12/07/11 C27729 **

carollo

CITY OF TURLOCK INC. 1908
STANISLAUS COUNTY, CALIFORNIA

HARDING DRAIN BYPASS
PUMP STATION AND PIPELINE
CIVIL
PIPELINE PLAN & PROFILE
STATION 36+00 TO STATION 49+00

VERIFY SCALES
BAR IS ONE INCH ON ORIGINAL DRAWING
0 1"
IF NOT ONE INCH ON THIS SHEET, ADJUST SCALES ACCORDINGLY

JOB NO. 6918B.10
DRAWING NO. P-3
SHEET NO. 26 OF 107

FILENAME: C:\pw_working\projectwise\alaico\dms60458\RCp03001 8-25-14 04:54pm ALaico XREFS: plan; G-BDR; UTILITY; Turlock; rcprf001; Alignment; pipeline; ADDTOPO-OF; S-01S101; NEWTID; Mjb; BEH; PIO; CA-MJB; CA-DGB; CA-MJH; CA-AEB; CA-GRS; CA-KAM; CA-ALM; CA-ALM_11-30-11; CA-DGB_11-30-11; CA-MJB_11-30-11; M-02M202 SADI0004; SADI0005; Turlck_City_LogoPMS_FNL;

Last Saved By: Alaico 8-25-14 04:53pm

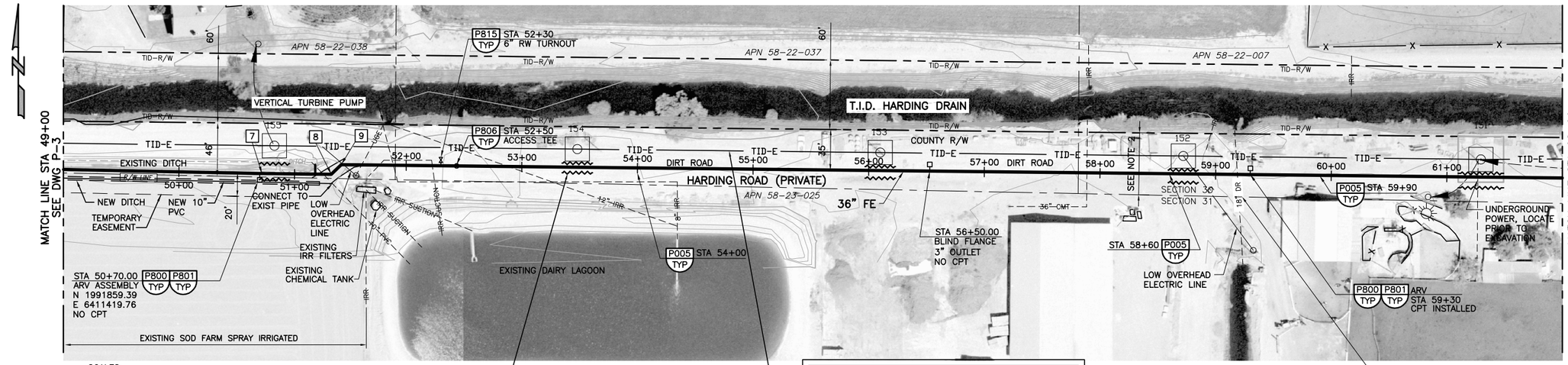

SCALES:
1" = 50' HORIZ
1" = 5' VERT

INSTALL TRENCH SHORING 15 FEET BEYOND EACH SIDE OF POWER POLE PER SPEC 02260 1.04.B.4./TYP

CAUTION:
CONTRACTOR SHALL TAKE CAUTION WHEN WORKING NEAR TURLOCK IRRIGATION DISTRICT'S (TID) 115KV POWER LINE. CONTRACTOR SHALL CONTACT TID PRIOR TO BEGINNING WORK TO DETERMINE ALL REQUIREMENTS FOR WORKING NEAR THE UTILITY. CONTRACTOR SHALL PROVIDE SAFETY TRAINING FOR ALL PERSONNEL OPERATING EQUIPMENT OR WORKING NEAR THE UTILITY.

CONTRACTOR SHALL INSTALL 36" FE CROSSING OF THE 18" IRR AT STATION 59+25 DURING THE NOVEMBER IRRIGATION SEASON (NOV 1 – MAR 14). CONTRACTOR SHALL NOTIFY TID 15 DAYS PRIOR TO INSTALLING 36" FE PIPELINE AT CROSSING LOCATIONS. THE EXISTING PIPELINE IS CIP CONCRETE AND SHALL BE PROTECTED IN PLACE DURING CONSTRUCTION. CONTRACTOR SHALL SUBMIT PROTECTION PLAN FOR ENGINEER'S REVIEW. NOT REQUIRED TO CROSS DURING NON-IRRIGATION SEASON.

7. CONTRACTOR SHALL RESTRAIN ALL FITTINGS WITH DEFLECTION GREATER THAN 5 DEGREES PER DETAIL A ON DRAWING P-25.

8. NEW 10" PVC PIPE SHALL BE SDR -18 IPS PRESSURE PIPE PER ASTM 2241.

7 PI STA = 50+71.74
N = 1991860.32
E = 6411425.26
0.57° HORIZ DEF

8 PI STA = 51+31.74
N = 1991859.66
E = 6411485.26
45° HORIZ BEND

9 PI STA = 51+50.15
N = 1991868.08
E = 6411493.86
45° HORIZ BEND

LEGEND:

- — TID-E — NEW POLES AND WIRES (TID=TURLOCK IRRIGATION DISTRICT).
- — TE — TE — LOCAL OVERHEAD TELEPHONE AND ELECTRICAL LINES ON SAME POLES.
- — E — E — OVERHEAD ELECTRIC LINES.
- — TUG — UNDERGROUND TELEPHONE
- 115KV STEEL TOWERS AT ANGLE OR WOOD ON STRAIGHT ALIGNMENTS. — TID EASEMENT AROUND POLE
- SHORING REQUIRED

NOTES:

1. ALL GENERAL NOTES SHOWN ON DRAWING G-2 APPLY TO THIS DRAWING.
2. CONTRACTOR SHALL TAKE CAUTION WHEN WORKING NEAR TURLOCK IRRIGATION DISTRICT'S (TID) 115KV POWER LINE. CONTRACTOR SHALL CONTACT TID PRIOR TO BEGINNING WORK TO DETERMINE ALL REQUIREMENTS FOR WORKING NEAR THE UTILITY. CONTRACTOR SHALL PROVIDE SAFETY TRAINING FOR ALL PERSONNEL OPERATING EQUIPMENT OR WORKING NEAR THE UTILITY.
3. TRENCH SHORING IS REQUIRED FOR 36" FE PIPE INSTALLATION FROM STATION 10+50.06 TO STATION 305+00. SEE SPECIFICATION 02260.
4. HARDING ROAD IS PRIVATE WAY FROM CARPENTER ROAD TO CROWS LANDING ROAD.
5. TAILWATER DITCHES ON NORTH AND WEST EDGES OF SOD FIELD ARE IN CONTINUOUS USE. TAILWATER PUMP IN PRECAST CONCRETE STRUCTURES RETURNS FLOW TO LAGOON DIRECTLY SOUTH OF STATION 53+00 VIA THE 10" PVC PIPELINE BENEATH THE NORTHERN TAILWATER DITCH. CONTRACTOR SHALL TEMPORARILY REMOVE TAILWATER PUMP AND FEATURES AS REQUIRED FOR PIPELINE CONSTRUCTION. CONTRACTOR SHALL PROVIDE FOR CONTINUED DELIVERY OF TAILWATER TO THE LAGOON DURING CONSTRUCTION. CONTRACTOR SHALL REINSTALL PUMP, MANIFOLD, UTILITY SERVICE AND ALL OTHER RELATED APPURTENANCES TO PRE-CONSTRUCTION CONDITIONS.
6. CONTRACTOR SHALL BOND ALL PIPE JOINTS AND FITTINGS (DUCTILE OR STEEL) PER CATHODIC PROTECTION TYPICAL DETAILS.

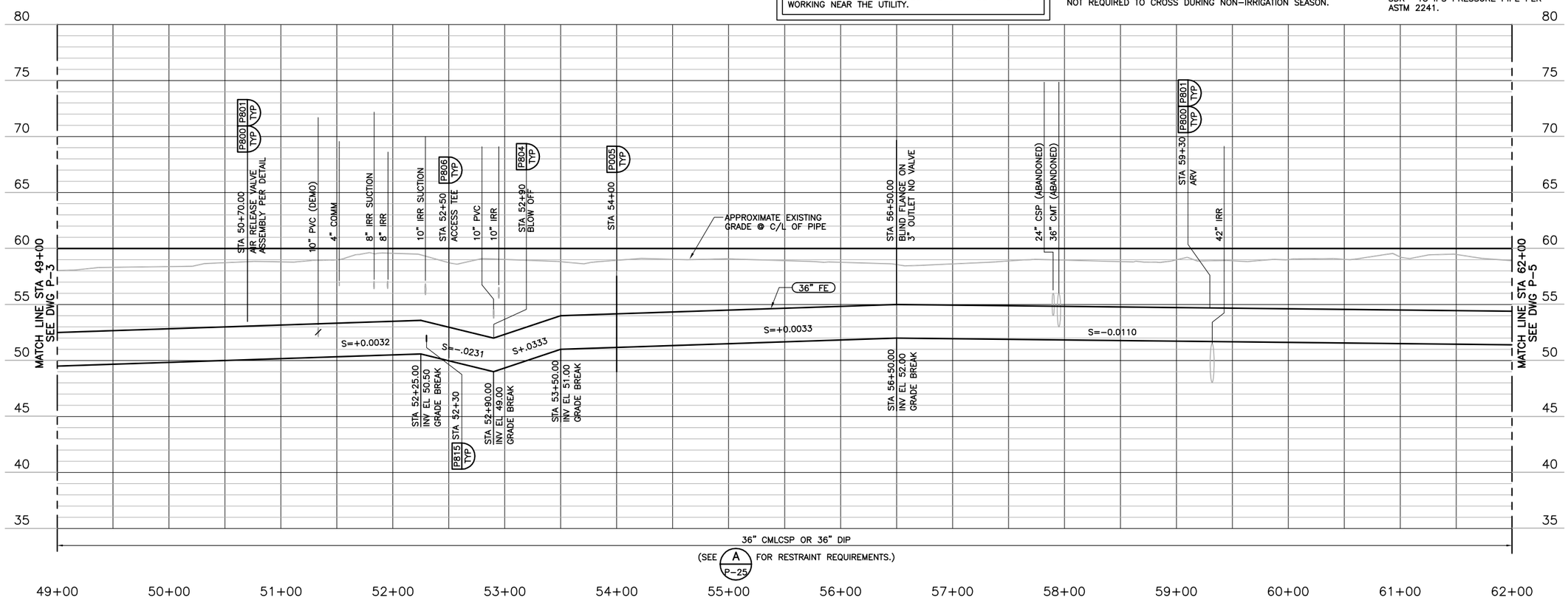

AVOID CUTTING UNDERGROUND UTILITY LINES. IT'S COSTLY.
Call before you Dig
1-800-227-2600
UNDERGROUND SERVICE (USA)

REV	DATE	BY	DESCRIPTION

RECORD DRAWINGS

DESIGNED PIO
DRAWN PAT
CHECKED BEH
DATE MAY 2012

DISCIPLINE ENGINEER: ** ORIGINAL SEALED BY MICHAEL J. HARTLAUB 12/07/11 C74901 **
PROJECT ENGINEER: ** ORIGINAL SEALED BY DARREN G. BAUNE 12/07/11 C68899 **
VICE PRESIDENT: ** ORIGINAL SEALED BY MICHAEL J. BRITTEN 12/07/11 C27729 **

carollo

CITY OF TURLOCK INC. 1908
STANISLAUS COUNTY, CALIFORNIA

HARDING DRAIN BYPASS
PUMP STATION AND PIPELINE
CIVIL
PIPELINE PLAN & PROFILE
STATION 49+00 TO STATION 62+00

VERIFY SCALES
BAR IS ONE INCH ON ORIGINAL DRAWING
0 1"
IF NOT ONE INCH ON THIS SHEET, ADJUST SCALES ACCORDINGLY

JOB NO. 6918B.10
DRAWING NO. P-4
SHEET NO. 27 OF 107

FILENAME: C:\pw_working\projectwise\alaico\dms60458\RCp04001 8-25-14 04:59pm ALaico XREFS: plan; G-BDR; UTILITY; Turlock; outfallgrid; rcprf001; Alignment; pipeline; ADDTOPO-OF; S-01S101; NEWTID; Mjb; BEH; PIO; CA-MJB; CA-DGB; CA-MJH; CA-AEB; CA-GRS; CA-KAM; CA-ALM; CA-ALM_11-30-11; CA-DGB_11-30-11; CA-MJB_11-30-11; M-02M202 SADI0005; SADI0006; Turlck_City_LogoPMS_FNL;

Last Saved By: Alaico 8-25-14 04:58pm

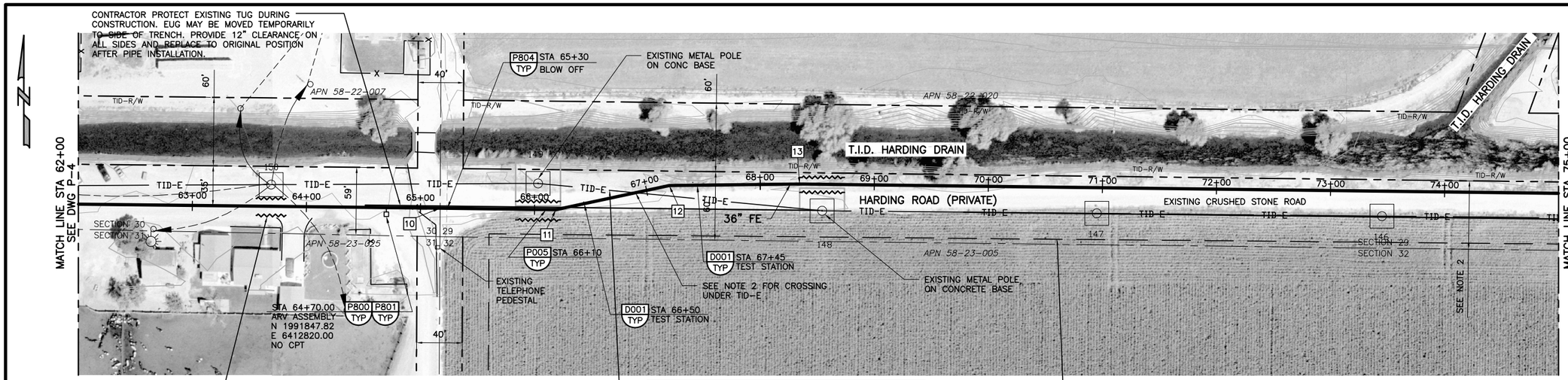

INSTALL TRENCH SHORING 15 FEET BEYOND EACH SIDE OF POWER POLE PER SPEC 02260 1.04.B.4. (TYP)

CAUTION:
CONTRACTOR SHALL TAKE CAUTION WHEN WORKING NEAR TURLOCK IRRIGATION DISTRICT'S (TID) 115KV POWER LINE. CONTRACTOR SHALL CONTACT TID PRIOR TO BEGINNING WORK TO DETERMINE ALL REQUIREMENTS FOR WORKING NEAR THE UTILITY. CONTRACTOR SHALL PROVIDE SAFETY TRAINING FOR ALL PERSONNEL OPERATING EQUIPMENT OR WORKING NEAR THE UTILITY.

CAUTION:
EXISTING 16" STEEL HIGH PRESSURE GAS LINE PARALLEL AND CROSSING TO 36" LINE. CONTRACTOR TO CONTACT PG&E TO DETERMINE LOCATION AND DEPTH PRIOR TO FABRICATION AND INSTALLATION OF 36" FE PIPELINE. PG&E PIPELINE IS CURRENTLY IN SERVICE AND DOES CONTAIN NATURAL GAS.

10 PI STA = 65+17.07
N = 1991853.08
E = 6412867.08
.07' HORIZ DEF

11 PI STA = 66+18.78
N = 1991851.85
E = 6412968.78
11.25' HORIZ BEND

12 PI STA = 67+26.66
N = 1991872.86
E = 6413068.07
11.25' HORIZ BEND

13 PI STA = 68+34.64
N = 1991874.25
E = 6413182.42
1.40' HORIZ DEF

LEGEND:

- —TID—E— NEW POLES AND WIRES (TID=TURLOCK IRRIGATION DISTRICT).
- —TE—TE— LOCAL OVERHEAD TELEPHONE AND ELECTRICAL LINES ON SAME POLES.
- —E—E— OVERHEAD ELECTRIC LINES.
- —TUG— UNDERGROUND TELEPHONE
- 115KV STEEL TOWERS AT ANGLE OR WOOD ON STRAIGHT ALIGNMENTS. TID EASEMENT AROUND POLE
- SHORING REQUIRED

NOTES:

1. ALL GENERAL NOTES SHOWN ON DRAWING G-2 APPLY TO THIS DRAWING.
2. CONTRACTOR SHALL TAKE CAUTION WHEN WORKING NEAR TURLOCK IRRIGATION DISTRICT'S (TID) 115KV POWER LINE. CONTRACTOR SHALL CONTACT TID PRIOR TO BEGINNING WORK TO DETERMINE ALL REQUIREMENTS FOR WORKING NEAR THE UTILITY. CONTRACTOR SHALL PROVIDE SAFETY TRAINING FOR ALL PERSONNEL OPERATING EQUIPMENT OR WORKING NEAR THE UTILITY.
3. TRENCH SHORING IS REQUIRED FOR 36" FE PIPE INSTALLATION FROM STATION 10+50.06 TO STATION 305+00. SEE SPECIFICATION 02260.
4. HARDING ROAD IS PRIVATE WAY FROM CARPENTER ROAD TO CROWS LANDING ROAD.
5. CONTRACTOR SHALL BOND ALL PIPE JOINTS AND FITTINGS (DUCTILE OR STEEL) PER CATHODIC PROTECTION TYPICAL DETAILS.
6. CONTRACTOR SHALL RESTRAIN ALL FITTINGS WITH DEFLECTION GREATER THAN 5 DEGREES PER DETAIL A ON DRAWING P-25.
7. HARDING ROAD FROM APPROXIMATE STATION 65+00 THRU 104+90 OF THE 36" FE PIPELINE INCLUDES A CRUSHED STONE SURFACE. CONTRACTOR SHALL STOCKPILE EXISTING AGGREGATE MATERIAL PRIOR TO TRENCHING THE ROADWAY SURFACE. AGGREGATE SHALL BE REPLACED TO EXISTING CONDITION AFTER PIPELINE INSTALLATION AND SUCCESSFUL PRESSURE TESTING OF THE 36" FE PIPE.

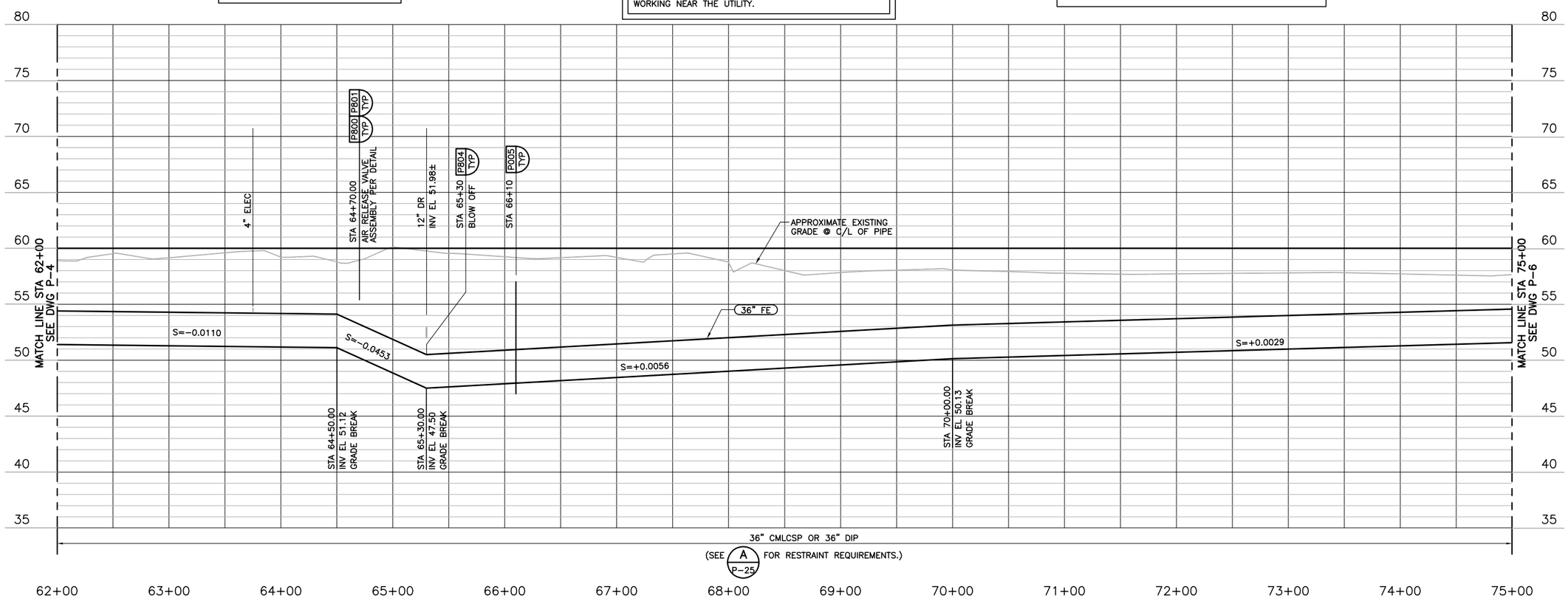

AVOID CUTTING UNDERGROUND UTILITY LINES. IT'S COSTLY.
Call before you Dig
1-800-227-2600
UNDERGROUND SERVICE (USA)

REV	DATE	BY	DESCRIPTION

RECORD DRAWINGS

DESIGNED PIO
DRAWN PAT
CHECKED BEH
DATE MAY 2012

DISCIPLINE ENGINEER: ** ORIGINAL SEALED BY MICHAEL J. HARTLAUB 12/07/11 C74901 **
PROJECT ENGINEER: ** ORIGINAL SEALED BY DARREN G. BAUNE 12/07/11 C68899 **
VICE PRESIDENT: ** ORIGINAL SEALED BY MICHAEL J. BRITTEN 12/07/11 C27729 **

carollo

CITY OF TURLOCK INC. 1908
STANISLAUS COUNTY, CALIFORNIA

HARDING DRAIN BYPASS
PUMP STATION AND PIPELINE
CIVIL
PIPELINE PLAN & PROFILE
STATION 62+00 TO STATION 75+00

VERIFY SCALES
BAR IS ONE INCH ON ORIGINAL DRAWING
0 1"
IF NOT ONE INCH ON THIS SHEET, ADJUST SCALES ACCORDINGLY

JOB NO. 6918B.10
DRAWING NO. P-5
SHEET NO. 28 OF 107

FILENAME: C:\pw_working\projectwise\alaico\dms60458\RCp05001 8-25-14 04:59pm ALaico XREFS: plan; G-BDR; UTILITY; Turlock; rcprf001; Alignment; pipeline; ADDTOPO-OF; S-01S101; NEWTID; Mjb; BEH; PIO; CA-MJB; CA-DGB; CA-MJH; CA-AEB; CA-GRS; CA-KAM; CA-ALM; CA-ALM_11-30-11; CA-DGB_11-30-11; CA-MJB_11-30-11; M-02M202 SADI0006; SADI0007; SADI0008; Turlck_City_LogoPMS_FNL;

Last Saved By: ALaico 8-25-14 04:59pm

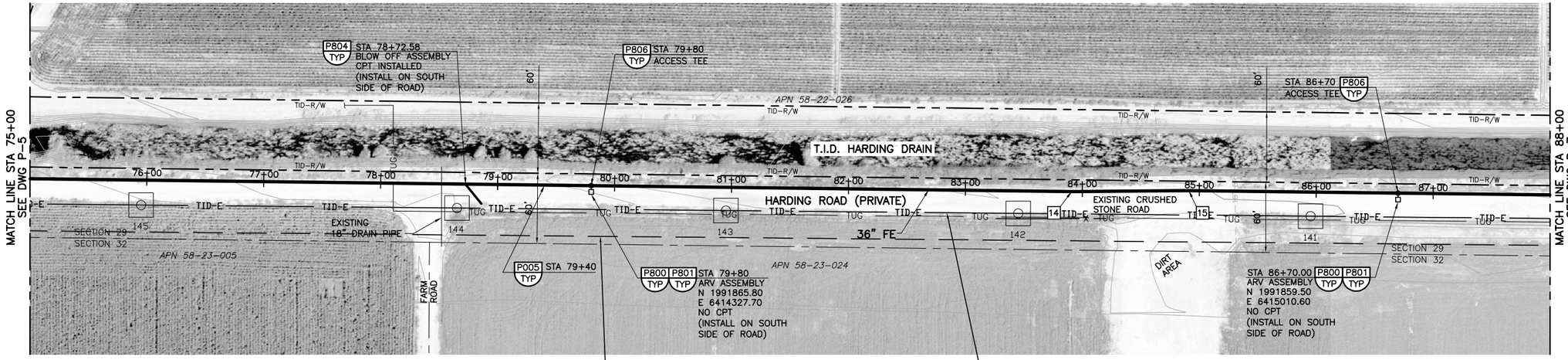

14 PI STA = 83+90.99
N = 1991855.31
E = 6414738.66
1.15° HORIZ DEF

15 PI STA = 84+91.01
N = 1991856.09
E = 6414838.67
1.15° HORIZ DEF

SCALES:
1" = 50' HORIZ
1" = 5' VERT

CAUTION:
EXISTING 16" STEEL HIGH PRESSURE GAS LINE PARALLEL AND CROSSING TO 36" LINE. CONTRACTOR TO CONTACT PG&E TO DETERMINE LOCATION AND DEPTH PRIOR TO FABRICATION AND INSTALLATION OF 36" FE PIPELINE. PG&E PIPELINE IS CURENTLY IN SERVICE AND DOES CONTAIN NATURAL GAS.

CAUTION:
CONTRACTOR SHALL TAKE CAUTION WHEN WORKING NEAR TURLOCK IRRIGATION DISTRICT'S (TID) 115KV POWER LINE. CONTRACTOR SHALL CONTACT TID PRIOR TO BEGINNING WORK TO DETERMINE ALL REQUIREMENTS FOR WORKING NEAR THE UTILITY. CONTRACTOR SHALL PROVIDE SAFETY TRAINING FOR ALL PERSONNEL OPERATING EQUIPMENT OR WORKING NEAR THE UTILITY.

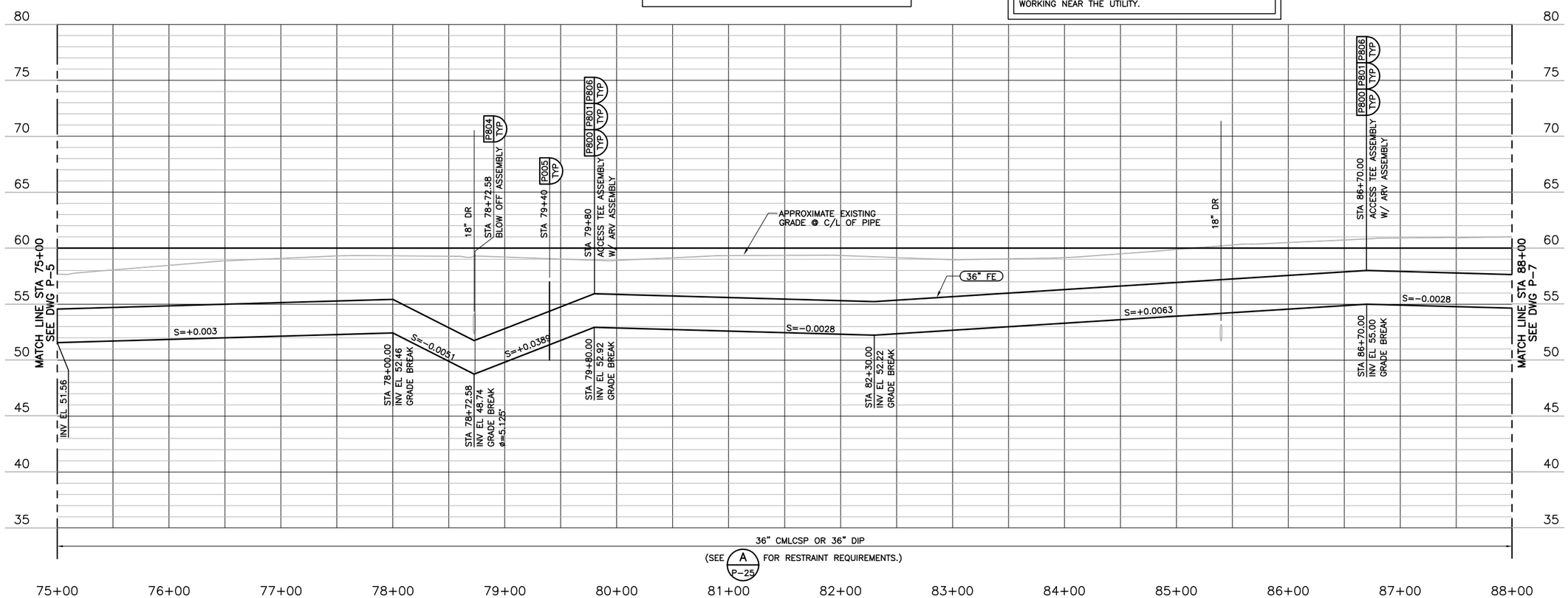

LEGEND:

- — TID-E — NEW POLES AND WIRES (TID=TURLOCK IRRIGATION DISTRICT).
- — TE — TE — LOCAL OVERHEAD TELEPHONE AND ELECTRICAL LINES ON SAME POLES.
- — E — E — OVERHEAD ELECTRIC LINES.
- — TUG — UNDERGROUND TELEPHONE
- 115KV STEEL TOWERS AT ANGLE OR WOOD ON STRAIGHT ALIGNMENTS.
- TID EASEMENT AROUND POLE

NOTES:

1. ALL GENERAL NOTES SHOWN ON DRAWING G-2 APPLY TO THIS DRAWING.
2. CONTRACTOR SHALL TAKE CAUTION WHEN WORKING NEAR TURLOCK IRRIGATION DISTRICT'S (TID) 115KV POWER LINE. CONTRACTOR SHALL CONTACT TID PRIOR TO BEGINNING WORK TO DETERMINE ALL REQUIREMENTS FOR WORKING NEAR THE UTILITY. CONTRACTOR SHALL PROVIDE SAFETY TRAINING FOR ALL PERSONNEL OPERATING EQUIPMENT OR WORKING NEAR THE UTILITY.
3. TRENCH SHORING IS REQUIRED FOR 36" FE PIPE INSTALLATION FROM STATION 10+50.06 TO STATION 305+00. SEE SPECIFICATION 02260.
4. HARDING ROAD IS PRIVATE WAY FROM CARPENTER ROAD TO CROWS LANDING ROAD.
5. CONTRACTOR SHALL BOND ALL PIPE JOINTS AND FITTINGS (DUCTILE OR STEEL) PER CATHODIC PROTECTION TYPICAL DETAILS.
6. CONTRACTOR SHALL RESTRAIN ALL FITTINGS WITH DEFLECTION GREATER THAN 5 DEGREES PER DETAIL A ON DRAWING P-25.
7. HARDING ROAD FROM APPROXIMATE STATION 65+00 THRU 104+90 OF THE 36" FE PIPELINE INCLUDES A CRUSHED STONE SURFACE. CONTRACTOR SHALL STOCKPILE EXISTING AGGREGATE MATERIAL PRIOR TO TRENCHING THE ROADWAY SURFACE. AGGREGATE SHALL BE REPLACED TO EXISTING CONDITION AFTER PIPELINE INSTALLATION AND SUCCESSFUL PRESSURE TESTING OF THE 36" FE PIPE.

AVOID CUTTING UNDERGROUND UTILITY LINES. IT'S COSTLY.
Call before you Dig
1-800-227-2600
UNDERGROUND SERVICE (USA)

REV	DATE	BY	DESCRIPTION
			RECORD DRAWINGS

DESIGNED PIO
DRAWN PAT
CHECKED BEH
DATE MAY 2012

DISCIPLINE ENGINEER: ** ORIGINAL SEALED BY MICHAEL J. HARTLAUB 12/07/11 C74901 **
PROJECT ENGINEER: ** ORIGINAL SEALED BY DARREN G. BAUNE 12/07/11 C68999 **
VICE PRESIDENT: ** ORIGINAL SEALED BY MICHAEL J. BRITTEN 12/07/11 C27729 **

carollo

CITY OF TURLOCK INC. 1908
STANISLAUS COUNTY, CALIFORNIA

HARDING DRAIN BYPASS
PUMP STATION AND PIPELINE
CIVIL
PIPELINE PLAN AND PROFILE
STATION 75+00 TO STATION 88+00

VERIFY SCALES
BAR IS ONE INCH ON ORIGINAL DRAWING
0 1"
IF NOT ONE INCH ON THIS SHEET, ADJUST SCALES ACCORDINGLY

JOB NO. 6918B.10
DRAWING NO. P-6
SHEET NO. 29 OF 107

FILENAME: C:\pw_working\projectwise\alaico\dms60458\RCp06001 8-25-14 05:00pm ALaico XREFS: plan; G-BDR; UTILITY; Turlock; rcprf001; Alignment; pipeline; ADDTOPO-OF; S-01S101; NEWTID; Mjb; BEH; PIO; CA-MJB; CA-DGB; CA-MJH; CA-AEB; CA-GRS; CA-KAM; CA-ALM; CA-ALM_11-30-11; CA-DGB_11-30-11; CA-MJB_11-30-11; M-02M202 SADI0008; SADI0009; Turlick_City_LogoPMS_FNL;

Last Saved By: ALaico 8-25-14 05:00pm

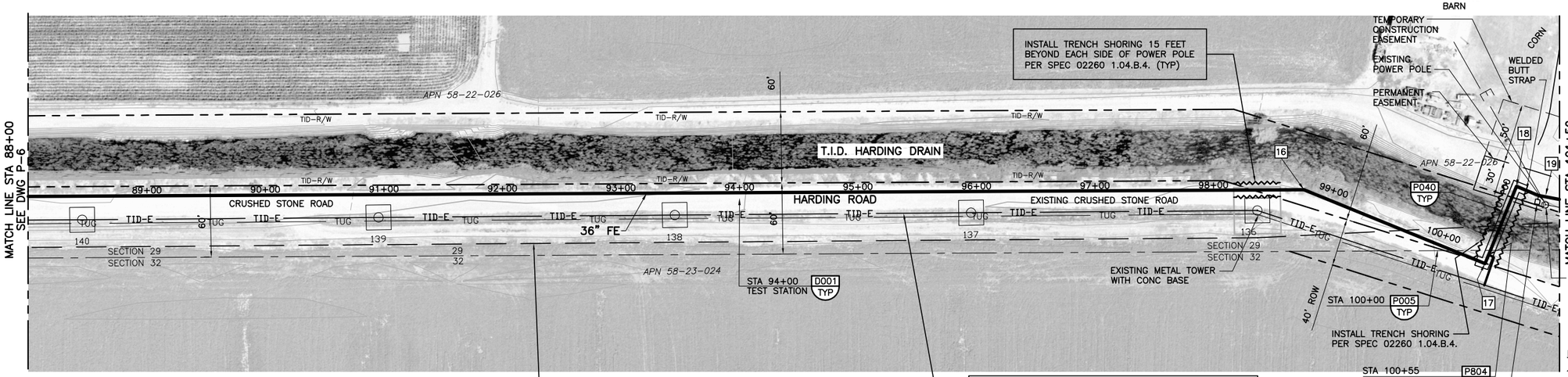

SCALES:
1" = 50' HORIZ
1" = 5' VERT

NOTES (CONT'D):

9. CITY OF TURLOCK WILL HAVE TID MOVE THE SECONDARY POWER POLE AWAY FROM THE PIPE ALIGNMENT PRIOR TO CONSTRUCTION.

CAUTION:
EXISTING 16" STEEL HIGH PRESSURE GAS LINE PARALLEL AND CROSSING TO 36" LINE. CONTRACTOR TO CONTACT PG&E TO DETERMINE LOCATION AND DEPTH PRIOR TO FABRICATION AND INSTALLATION OF 36" FE PIPELINE. PG&E PIPELINE IS CURRENTLY IN SERVICE AND DOES CONTAIN NATURAL GAS.

CAUTION:
CONTRACTOR SHALL TAKE CAUTION WHEN WORKING NEAR TURLOCK IRRIGATION DISTRICT'S (TID) 115KV POWER LINE. CONTRACTOR SHALL CONTACT TID PRIOR TO BEGINNING WORK TO DETERMINE ALL REQUIREMENTS FOR WORKING NEAR THE UTILITY. CONTRACTOR SHALL PROVIDE SAFETY TRAINING FOR ALL PERSONNEL OPERATING EQUIPMENT OR WORKING NEAR THE UTILITY.

16 PI STA = 98+76.38
N = 1991839.23
E = 6416223.94
22.50° HORIZ BEND

17 PI STA = 100+41.24
N = 1991774.25
E = 6416375.58
90° HORIZ BEND

18 PI STA = 101+11.77
N = 1991838.85
E = 6416403.26
90.00° HORIZ BEND

19 PI STA = 100+31.77
N = 1991830.97
E = 6416421.64
11.25° HORIZ BEND

LEGEND:

- TID-E — NEW POLES AND WIRES (TID=TURLOCK IRRIGATION DISTRICT).
- TE — TE — LOCAL OVERHEAD TELEPHONE AND ELECTRICAL LINES ON SAME POLES.
- E — E — OVERHEAD ELECTRIC LINES.
- TUG — UNDERGROUND TELEPHONE
- 115KV STEEL TOWERS AT ANGLE OR WOOD ON STRAIGHT ALIGNMENTS.
- TID EASEMENT AROUND POLE
- SHORING REQUIRED

NOTES:

1. ALL GENERAL NOTES SHOWN ON DRAWING G-2 APPLY TO THIS DRAWING.
2. CONTRACTOR SHALL TAKE CAUTION WHEN WORKING NEAR TURLOCK IRRIGATION DISTRICT'S (TID) 115KV POWER LINE. CONTRACTOR SHALL CONTACT TID PRIOR TO BEGINNING WORK TO DETERMINE ALL REQUIREMENTS FOR WORKING NEAR THE UTILITY. CONTRACTOR SHALL PROVIDE SAFETY TRAINING FOR ALL PERSONNEL OPERATING EQUIPMENT OR WORKING NEAR THE UTILITY.
3. TRENCH SHORING IS REQUIRED FOR 36" FE PIPE INSTALLATION FROM STATION 10+50.06 TO STATION 305+00. SEE SPECIFICATION 02260.
4. HARDING ROAD IS PRIVATE WAY FROM CARPENTER ROAD TO CROWS LANDING ROAD.
5. CONTRACTOR SHALL BOND ALL PIPE JOINTS AND FITTINGS (DUCTILE OR STEEL) PER CATHODIC PROTECTION TYPICAL DETAILS.
6. CONTRACTOR SHALL RESTRAIN ALL FITTINGS WITH DEFLECTION GREATER THAN 5 DEGREES PER DETAIL A ON DRAWING P-25.
7. CONTRACTOR SHALL INSTALL PIPE CROSSING TID HARDING DRAIN PER SPECIFICATION 01140.
8. HARDING ROAD FROM APPROXIMATE STATION 65+00 THRU 104+90 OF THE 36" FE PIPELINE INCLUDES A CRUSHED STONE SURFACE. CONTRACTOR SHALL STOCKPILE EXISTING AGGREGATE MATERIAL PRIOR TO TRENCHING THE ROADWAY SURFACE. AGGREGATE SHALL BE REPLACED TO EXISTING CONDITION AFTER PIPELINE INSTALLATION AND SUCCESSFUL PRESSURE TESTING OF THE 36" FE PIPE.

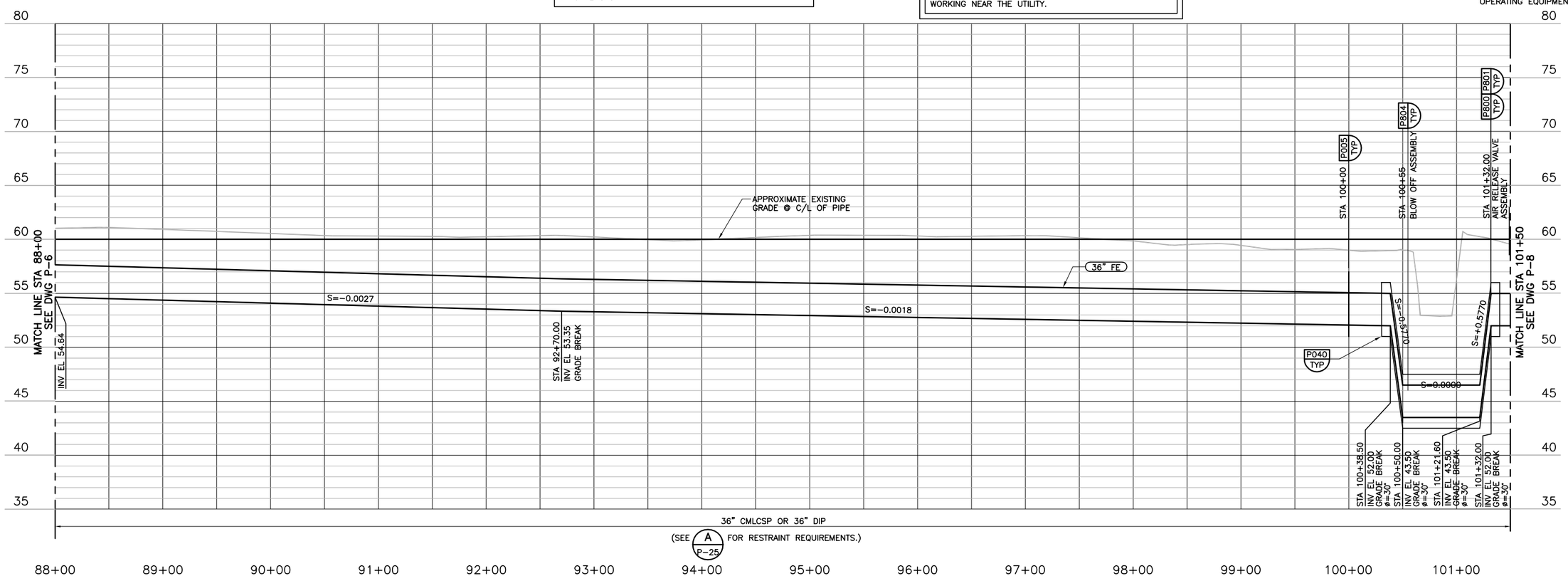

AVOID CUTTING UNDERGROUND UTILITY LINES. IT'S COSTLY.
Call before you Dig
1-800-227-2600
UNDERGROUND SERVICE (USA)

REV	DATE	BY	DESCRIPTION

RECORD DRAWINGS

DESIGNED PIO
DRAWN PAT
CHECKED BEH
DATE MAY 2012

DISCIPLINE ENGINEER: ** ORIGINAL SEALED BY MICHAEL J. HARTLAUB 12/07/11 C74901 **
PROJECT ENGINEER: ** ORIGINAL SEALED BY DARREN G. BAUNE 12/07/11 C68899 **
VICE PRESIDENT: ** ORIGINAL SEALED BY MICHAEL J. BRITTEN 12/07/11 C27729 **

carollo

CITY OF TURLOCK INC. 1908
STANISLAUS COUNTY, CALIFORNIA

HARDING DRAIN BYPASS
PUMP STATION AND PIPELINE
CIVIL
PIPELINE PLAN & PROFILE
STATION 88+00 TO STATION 101+50

VERIFY SCALES
BAR IS ONE INCH ON ORIGINAL DRAWING
0 1"
IF NOT ONE INCH ON THIS SHEET, ADJUST SCALES ACCORDINGLY

JOB NO. 6918B.10
DRAWING NO. P-7
SHEET NO. 30 OF 107

FILENAME: C:\pw_working\projectwise\alaico\dms60458\RCp07001 8-25-14 05:01pm ALaico XREFS: plan; G-BDR; UTILITY; Turlock; rcprf001; Alignment; pipeline; ADDTOPO-OF; S-01S101; NEWTID; Mjb; BEH; PIO; CA-MJB; CA-DGB; CA-MJH; CA-AEB; CA-GRS; CA-KAM; CA-ALM; CA-ALM_11-30-11; CA-DGB_11-30-11; CA-MJB_11-30-11; M-02M202 SADI0008; SADI0009; SADI0010; Turlck_City_LogoPMS_FNL;

Last Saved By: Alaico 8-25-14 05:00pm

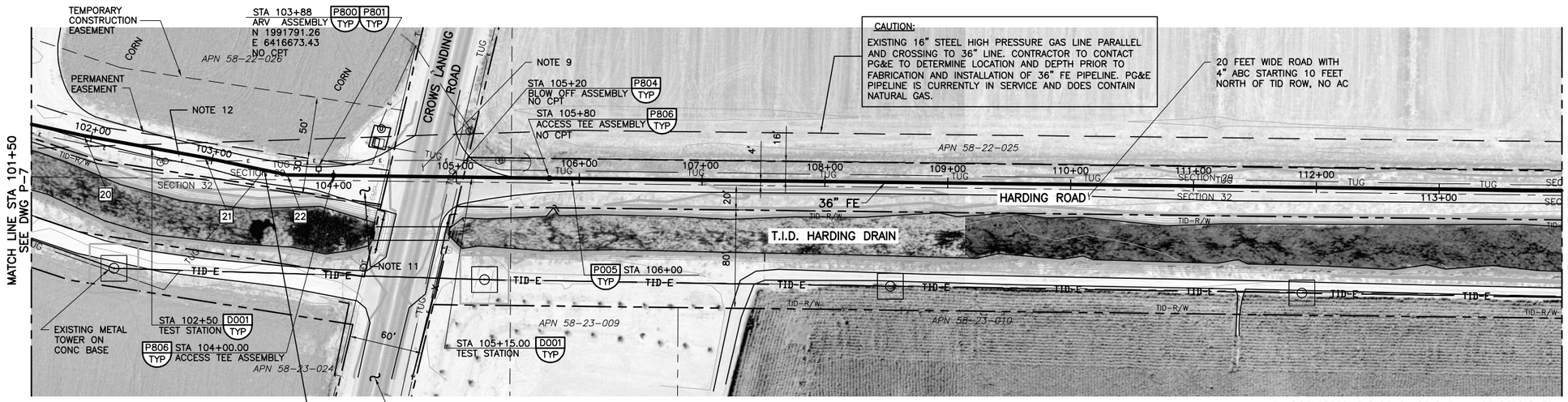

SCALES:
1" = 50' HORIZ
1" = 5' VERT

20 PI STA = 101+93.77
N = 1991818.14
E = 6416482.30
1.65' HORIZ DEF

21 PI STA = 102+93.77
N = 1991800.26
E = 6416580.69
1.65' HORIZ DEF

22 PI STA = 103+62.32
N = 1991786.07
E = 6416647.75
11.25' HORIZ BEND

LEGEND:

- TID-E — NEW POLES AND WIRES (TID=TURLOCK IRRIGATION DISTRICT).
- TE — TE — LOCAL OVERHEAD TELEPHONE AND ELECTRICAL LINES ON SAME POLES.
- E — E — OVERHEAD ELECTRIC LINES.
- TUG — UNDERGROUND TELEPHONE
- 115KV STEEL TOWERS AT ANGLE OR WOOD ON STRAIGHT ALIGNMENTS. TID EASEMENT AROUND POLE

9. CONTRACTOR SHALL INSTALL THE 36" FE WITHIN THE CROWS LANDING ROAD RIGHT OF WAY PER P003 TYP.
10. PIPE CROSSING THROUGH ROAD SHALL BE PERFORMED DURING NIGHT HOURS. COORDINATE WITH STANISLAUS COUNTY ON TRAFFIC CONTROLS AND REQUIRED SHUTDOWN HOURS.
11. CONTRACTOR TO REPAIR AND REPLACE GRAVEL ROAD TO SATISFACTION OF LAND OWNER. APN-58-22-026
12. EXISTING 1/2" DIAMETER CRUSHED STONE, CONTRACTOR TO REPLACE ANY DAMAGED SECTIONS WITH NEW CRUSHED STONE.

NOTES:

1. ALL GENERAL NOTES SHOWN ON DRAWING G-2 APPLY TO THIS DRAWING.
2. CONTRACTOR SHALL TAKE CAUTION WHEN WORKING NEAR TURLOCK IRRIGATION DISTRICT'S (TID) 115KV POWER LINE. CONTRACTOR SHALL CONTACT TID PRIOR TO BEGINNING WORK TO DETERMINE ALL REQUIREMENTS FOR WORKING NEAR THE UTILITY. CONTRACTOR SHALL PROVIDE SAFETY TRAINING FOR ALL PERSONNEL OPERATING EQUIPMENT OR WORKING NEAR THE UTILITY.
3. TRENCH SHORING IS REQUIRED FOR 36" FE PIPE INSTALLATION FROM STATION 10+50.06 TO STATION 305+00. SEE SPECIFICATION 02260.
4. HARDING ROAD IS PRIVATE WAY FROM CARPENTER ROAD TO CROWS LANDING ROAD.
5. CONTRACTOR SHALL BOND ALL PIPE JOINTS AND FITTINGS (DUCTILE OR STEEL) PER CATHODIC PROTECTION TYPICAL DETAILS.
6. CONTRACTOR SHALL RESTRAIN ALL FITTINGS WITH DEFLECTION GREATER THAN 5 DEGREES PER DETAIL A ON DRAWING P-25.
7. FROM CROWS LANDING ROAD (APPROXIMATE STATION 105+25) TO 300' WEST OF MORGAN ROAD (SEE DRAWING P-13, APPROXIMATE STATION 166+70) HARDING ROAD IS LOCATED WITHIN A DEDICATED STANISLAUS COUNTY RIGHT OF WAY.
8. HARDING ROAD FROM APPROXIMATE STATION 65+00 THRU 104+90 OF THE 36" FE PIPELINE INCLUDES A CRUSHED STONE SURFACE. CONTRACTOR SHALL STOCKPILE EXISTING AGGREGATE MATERIAL PRIOR TO TRENCHING THE ROADWAY SURFACE. AGGREGATE SHALL BE REPLACED TO EXISTING CONDITION AFTER PIPELINE INSTALLATION AND SUCCESSFUL PRESSURE TESTING OF THE 36" FE PIPE.

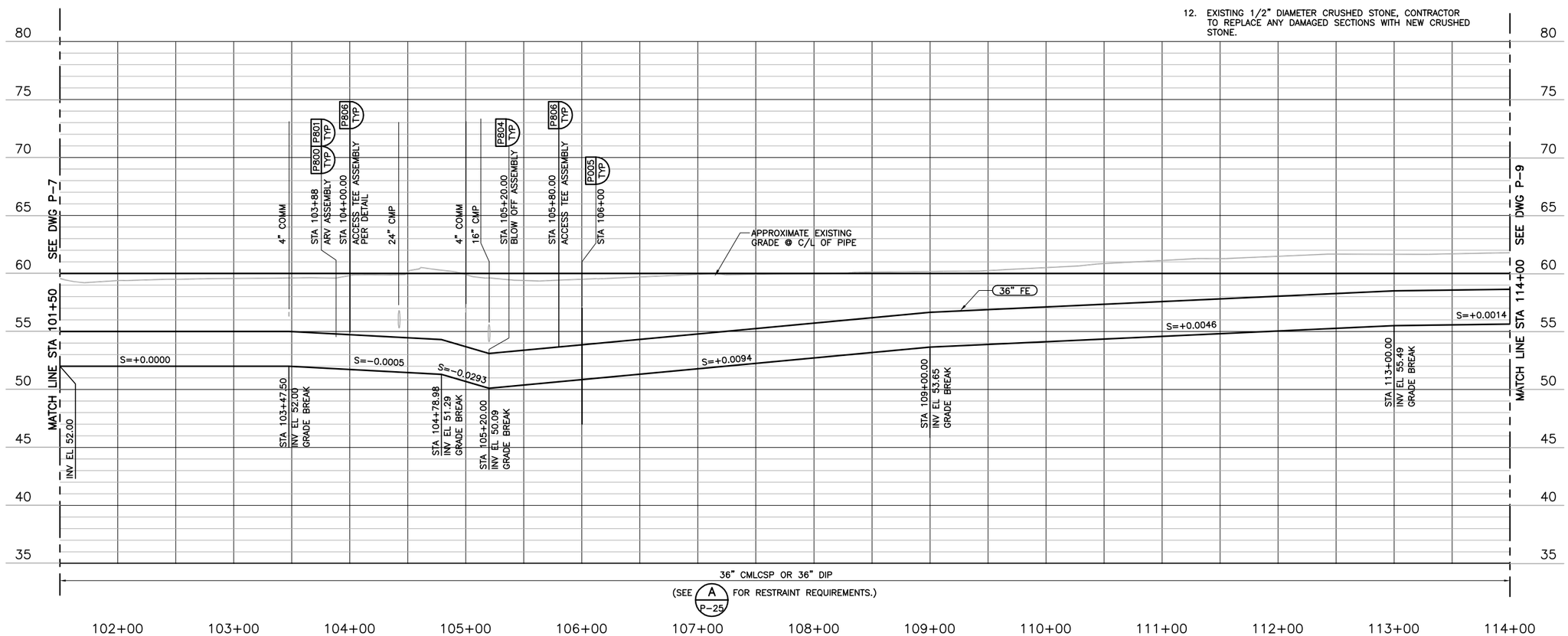

AVOID CUTTING UNDERGROUND UTILITY LINES. IT'S COSTLY.
Call before you Dig
1-800-227-2600
UNDERGROUND SERVICE (USA)

REV	DATE	BY	DESCRIPTION
			RECORD DRAWINGS

DESIGNED PIO
DRAWN PAT
CHECKED BEH
DATE MAY 2012

DISCIPLINE ENGINEER: ** ORIGINAL SEALED BY MICHAEL J. HARTLAUB 12/07/11 C74901 **
PROJECT ENGINEER: ** ORIGINAL SEALED BY DARREN G. BAUNE 12/07/11 C68899 **
VICE PRESIDENT: ** ORIGINAL SEALED BY MICHAEL J. BRITTEN 12/07/11 C27729 **

carollo

CITY OF TURLOCK INC. 1908
STANISLAUS COUNTY, CALIFORNIA

HARDING DRAIN BYPASS
PUMP STATION AND PIPELINE
CIVIL
PIPELINE PLAN & PROFILE
STATION 101+50 TO STATION 114+00

VERIFY SCALES
BAR IS ONE INCH ON ORIGINAL DRAWING
0 1"
IF NOT ONE INCH ON THIS SHEET, ADJUST SCALES ACCORDINGLY

JOB NO. 6918B.10
DRAWING NO. P-8
SHEET NO. 31 OF 107

FILENAME: C:\pw_working\projectwise\aloico\dms60458\RCp08001 8-25-14 05:02pm ALaico XREFS: G-BDR; rcprf001; ETOPO; NEWTID; UTILITY; plan; Turlock; Mjb; Alignment; S-01S101; ADDTOPO-OF; BEH; CA-MJB; CA-DGB; CA-MJH; CA-AEB; CA-GRS; CA-KAM; CA-ALM; CA-ALM_11-30-11; CA-DGB_11-30-11; CA-MJB_11-30-11; M-02M202 SADI0010; SADI0011; Turlck_City_LogoPMS_FNL;

Last Saved By: ALaico 8-25-14 05:01pm

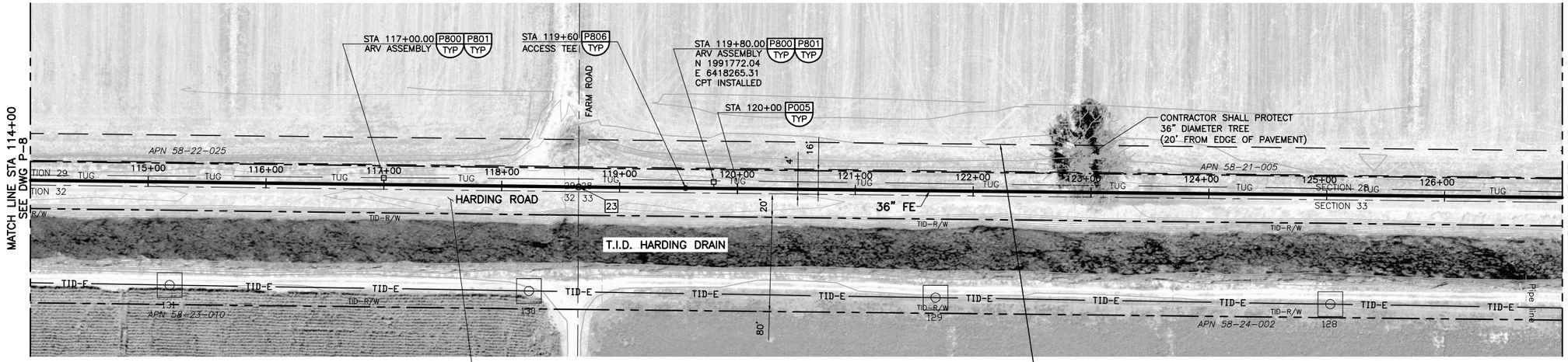

SCALES:
1" = 50' HORIZ
1" = 5' VERT

20 FEET WIDE ROAD WITH 4" ABC STARTING 10 FEET NORTH OF TID ROW. NO AC.

CAUTION:
EXISTING 16" STEEL HIGH PRESSURE GAS LINE PARALLEL AND CROSSING TO 36" LINE. CONTRACTOR TO CONTACT PG&E TO DETERMINE LOCATION AND DEPTH PRIOR TO FABRICATION AND INSTALLATION OF 36" FE PIPELINE. PG&E PIPELINE IS CURENTLY IN SERVICE AND DOES CONTAIN NATURAL GAS.

23 PI STA = 118+65.23
N = 1991767.79
E = 6418150.55
.08' HORIZ DEF

LEGEND:

- TID-E — NEW POLES AND WIRES (TID=TURLOCK IRRIGATION DISTRICT).
- TE — TE — LOCAL OVERHEAD TELEPHONE AND ELECTRICAL LINES ON SAME POLES.
- E — E — OVERHEAD ELECTRIC LINES.
- TUG — UNDERGROUND TELEPHONE
- 115KV STEEL TOWERS AT ANGLE OR WOOD ON STRAIGHT ALIGNMENTS.
- TID EASEMENT AROUND POLE

NOTES:

1. ALL GENERAL NOTES SHOWN ON DRAWING G-2 APPLY TO THIS DRAWING.
2. CONTRACTOR SHALL TAKE CAUTION WHEN WORKING NEAR TURLOCK IRRIGATION DISTRICT'S (TID) 115KV POWER LINE. CONTRACTOR SHALL CONTACT TID PRIOR TO BEGINNING WORK TO DETERMINE ALL REQUIREMENTS FOR WORKING NEAR THE UTILITY. CONTRACTOR SHALL PROVIDE SAFETY TRAINING FOR ALL PERSONNEL OPERATING EQUIPMENT OR WORKING NEAR THE UTILITY.
3. TRENCH SHORING IS REQUIRED FOR 36" FE PIPE INSTALLATION FROM STATION 10+50.06 TO STATION 305+00. SEE SPECIFICATION 02260.
4. CONTRACTOR SHALL BOND ALL PIPE JOINTS AND FITTINGS (DUCTILE OR STEEL) PER CATHODIC PROTECTION TYPICAL DETAILS.
5. CONTRACTOR SHALL RESTRAIN ALL FITTINGS WITH DEFLECTION GREATER THAN 5 DEGREES PER DETAIL A ON DRAWING P-25.
6. FROM CROWS LANDING ROAD (APPROXIMATE STATION 105+25 OF THE 36" FE) TO 300' WEST OF MORGAN ROAD (SEE DRAWING P-13, APPROXIMATE STATION 166+70 OF THE 36" FE) HARDING ROAD IS LOCATED WITHIN A DEDICATED STANISLAUS COUNTY RIGHT OF WAY.

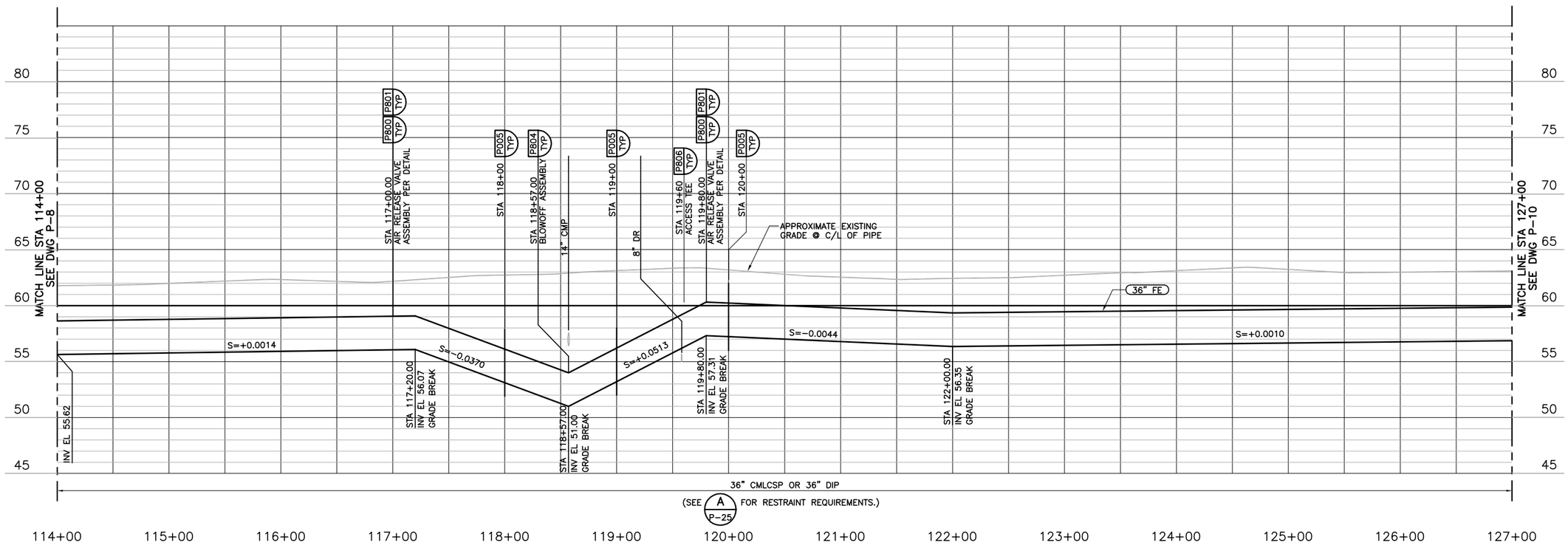

AVOID CUTTING UNDERGROUND UTILITY LINES. IT'S COSTLY.
Call before you Dig
1-800-227-2600
UNDERGROUND SERVICE (USA)

REV	DATE	BY	DESCRIPTION

RECORD DRAWINGS

DESIGNED PIO
DRAWN PAT
CHECKED BEH
DATE MAY 2012

DISCIPLINE ENGINEER: ** ORIGINAL SEALED BY MICHAEL J. HARTLAUB 12/07/11 C74901 **
PROJECT ENGINEER: ** ORIGINAL SEALED BY DARREN G. BAUNE 12/07/11 C68899 **
VICE PRESIDENT: ** ORIGINAL SEALED BY MICHAEL J. BRITTEN 12/07/11 C27729 **

carollo

CITY OF TURLOCK INC. 1908
STANISLAUS COUNTY, CALIFORNIA

HARDING DRAIN BYPASS
PUMP STATION AND PIPELINE
CIVIL
PIPELINE PLAN & PROFILE
STATION 114+00 TO STATION 127+00

VERIFY SCALES
BAR IS ONE INCH ON ORIGINAL DRAWING
0 1"
IF NOT ONE INCH ON THIS SHEET, ADJUST SCALES ACCORDINGLY

JOB NO. 6918B.10
DRAWING NO. P-9
SHEET NO. 32 OF 107

Last Saved By: Alaico 8-25-14 05:03pm

FILENAME: C:\pw_working\projectwise\alaico\dms60458\RCp09001 8-25-14 05:03pm ALaico XREFS: plan; G-BDR; UTILITY; Turlock; pipeline; ADDTOPO-OF; rcprf001; NEWTID; Mjb; BEH; Alignment; S-01S101; PIO; CA-MJB; CA-DGB; CA-MJH; CA-AEB; CA-GRS; CA-KAM; CA-ALM; CA-ALM_11-30-11; CA-DGB_11-30-11; CA-MJB_11-30-11; M-02M202 SADI0011; SADI0012; Turlck_City_LogoPMS_FNL;

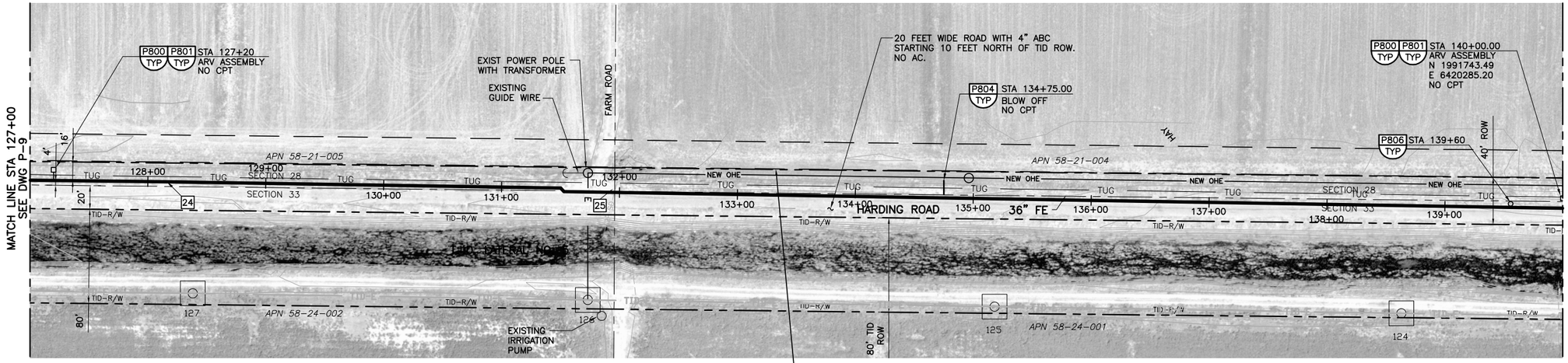

24 PI STA = 128+16.16
N = 1991757.47
E = 6419101.43
0.29' HORIZ DEF

25 PI STA = 131+94.55
N = 1991751.43
E = 6419479.76
0.04' HORIZ DEF

SCALES:
1" = 50' HORIZ
1" = 5' VERT

CAUTION:

EXISTING 16" STEEL HIGH PRESSURE GAS LINE PARALLEL AND CROSSING TO 36" LINE. CONTRACTOR TO CONTACT PG&E TO DETERMINE LOCATION AND DEPTH PRIOR TO FABRICATION AND INSTALLATION OF 36" FE PIPELINE. PG&E PIPELINE IS CURRENTLY IN SERVICE AND DOES CONTAIN NATURAL GAS.

LEGEND:

- —TID–E— NEW POLES AND WIRES (TID=TURLOCK IRRIGATION DISTRICT).
- —TE—TE— LOCAL OVERHEAD TELEPHONE AND ELECTRICAL LINES ON SAME POLES.
- —E—E— OVERHEAD ELECTRIC LINES.
- —TUG— UNDERGROUND TELEPHONE
- 115KV STEEL TOWERS AT ANGLE OR WOOD ON STRAIGHT ALIGNMENTS. TID EASEMENT AROUND POLE

NOTES:

1. ALL GENERAL NOTES SHOWN ON DRAWING G–2 APPLY TO THIS DRAWING.
2. CONTRACTOR SHALL TAKE CAUTION WHEN WORKING NEAR TURLOCK IRRIGATION DISTRICT'S (TID) 115KV POWER LINE. CONTRACTOR SHALL CONTACT TID PRIOR TO BEGINNING WORK TO DETERMINE ALL REQUIREMENTS FOR WORKING NEAR THE UTILITY. CONTRACTOR SHALL PROVIDE SAFETY TRAINING FOR ALL PERSONNEL OPERATING EQUIPMENT OR WORKING NEAR THE UTILITY.
3. TRENCH SHORING IS REQUIRED FOR 36" FE PIPE INSTALLATION FROM STATION 10+50.06 TO STATION 305+00. SEE SPECIFICATION 02260.
4. CONTRACTOR SHALL BOND ALL PIPE JOINTS AND FITTINGS (DUCTILE OR STEEL) PER CATHODIC PROTECTION TYPICAL DETAILS.
5. CONTRACTOR SHALL RESTRAIN ALL FITTINGS WITH DEFLECTION GREATER THAN 5 DEGREES PER DETAIL A ON DRAWING P–25.
6. FROM CROWS LANDING ROAD (APPROXIMATE STATION 105+25 OF THE 36" FE) TO 300' WEST OF MORGAN ROAD (SEE DRAWING P–13, APPROXIMATE STATION 166+70 OF THE 36" FE) HARDING ROAD IS LOCATED WITHIN A DEDICATED STANISLAUS COUNTY RIGHT OF WAY.

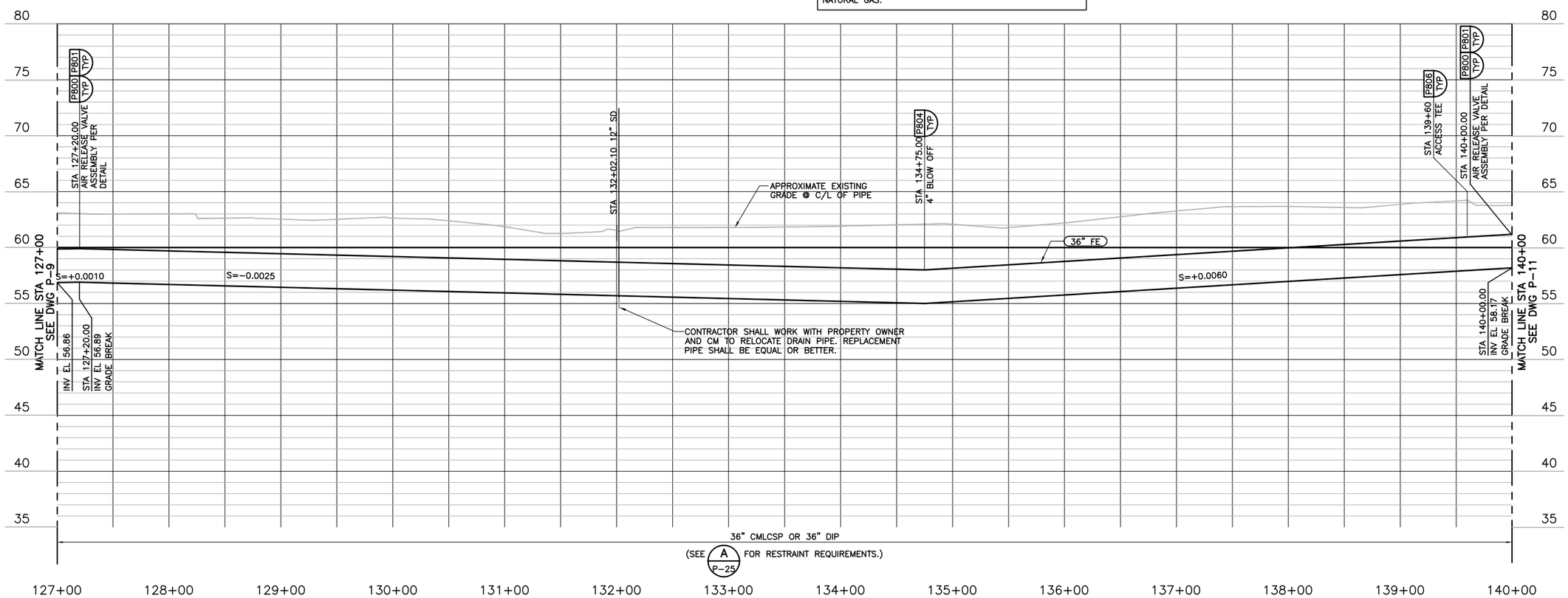

AVOID CUTTING UNDERGROUND UTILITY LINES. IT'S COSTLY.
Call before you Dig
1-800-227-2600
UNDERGROUND SERVICE (USA)

REV	DATE	BY	DESCRIPTION

RECORD DRAWINGS

DESIGNED PIO
DRAWN PAT
CHECKED BEH
DATE MAY 2012

DISCIPLINE ENGINEER: ** ORIGINAL SEALED BY MICHAEL J. HARTLAUB 12/07/11 C74901 **
PROJECT ENGINEER: ** ORIGINAL SEALED BY DARREN G. BAUNE 12/07/11 C68899 **
VICE PRESIDENT: ** ORIGINAL SEALED BY MICHAEL J. BRITTEN 12/07/11 C27729 **

carollo

CITY OF TURLOCK INC. 1908
STANISLAUS COUNTY, CALIFORNIA

HARDING DRAIN BYPASS
PUMP STATION AND PIPELINE
CIVIL
PIPELINE PLAN & PROFILE
STATION 127+00 TO STATION 140+00

VERIFY SCALES
BAR IS ONE INCH ON ORIGINAL DRAWING
0 1"
IF NOT ONE INCH ON THIS SHEET, ADJUST SCALES ACCORDINGLY

JOB NO. 6918B.10
DRAWING NO. P–10
SHEET NO. 33 OF 107

FILENAME: C:\pw_working\projectwise\alaico\dms60458\RCp10001 8-25-14 05:05pm ALaico XREFS: plan; G-BDR; UTILITY; Turlock; outfallgrid; pipeline; ADDTOPO-OF; rcprf001; NEWTID; Mjb; BEH; Alignment; S-01S101; PIO; CA-MJB; CA-DGB; CA-MJH; CA-AEB; CA-GRS; CA-KAM; CA-ALM; CA-ALM_11-30-11; CA-DGB_11-30-11; CA-MJB_11-30-11; M-02M202 SADI0012; SADI0013; Turick_City_LogoPMS_FNL;

Last Saved By: ALaico 8-25-14 05:04pm

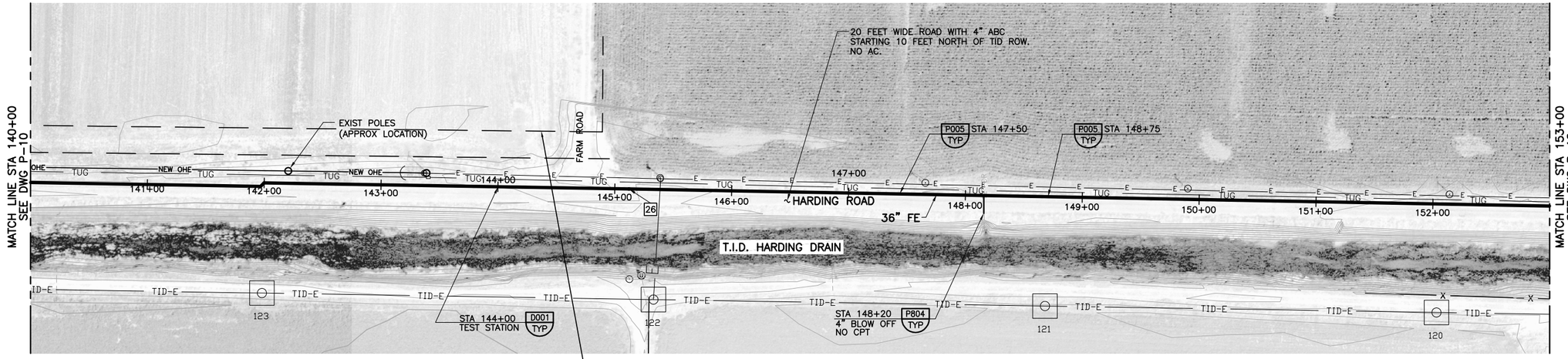

26 PI STA = 145+12.00
N = 1991729.45
E = 6420797.03
0.11' HORIZ DEF

LEGEND:

- —TID—E— NEW POLES AND WIRES (TID=TURLOCK IRRIGATION DISTRICT).
- —TE—TE— LOCAL OVERHEAD TELEPHONE AND ELECTRICAL LINES ON SAME POLES.
- —E—E— OVERHEAD ELECTRIC LINES.
- —TUG— UNDERGROUND TELEPHONE
- 115KV STEEL TOWERS AT ANGLE OR WOOD ON STRAIGHT ALIGNMENTS. TID EASEMENT AROUND POLE

SCALES:
1" = 50' HORIZ
1" = 5' VERT

CAUTION:
EXISTING 16" STEEL HIGH PRESSURE GAS LINE PARALLEL AND CROSSING TO 36" LINE. CONTRACTOR TO CONTACT PG&E TO DETERMINE LOCATION AND DEPTH PRIOR TO FABRICATION AND INSTALLATION OF 36" FE PIPELINE. PG&E PIPELINE IS CURRENTLY IN SERVICE AND DOES CONTAIN NATURAL GAS.

NOTES:

1. ALL GENERAL NOTES SHOWN ON DRAWING G-2 APPLY TO THIS DRAWING.
2. CONTRACTOR SHALL TAKE CAUTION WHEN WORKING NEAR TURLOCK IRRIGATION DISTRICT'S (TID) 115KV POWER LINE. CONTRACTOR SHALL CONTACT TID PRIOR TO BEGINNING WORK TO DETERMINE ALL REQUIREMENTS FOR WORKING NEAR THE UTILITY. CONTRACTOR SHALL PROVIDE SAFETY TRAINING FOR ALL PERSONNEL OPERATING EQUIPMENT OR WORKING NEAR THE UTILITY.
3. TRENCH SHORING IS REQUIRED FOR 36" FE PIPE INSTALLATION FROM STATION 10+50.06 TO STATION 305+00. SEE SPECIFICATION 02260.
4. CONTRACTOR SHALL BOND ALL PIPE JOINTS AND FITTINGS (DUCTILE OR STEEL) PER CATHODIC PROTECTION TYPICAL DETAILS.
5. CONTRACTOR SHALL RESTRAIN ALL FITTINGS WITH DEFLECTION GREATER THAN 5 DEGREES PER DETAIL A ON DRAWING P-25.
6. FROM CROWS LANDING ROAD (APPROXIMATE STATION 105+25 OF THE 36" FE) TO 300' WEST OF MORGAN ROAD (SEE DRAWING P-13, APPROXIMATE STATION 166+70 OF THE 36" FE) HARDING ROAD IS LOCATED WITHIN A DEDICATED STANISLAUS COUNTY RIGHT OF WAY.

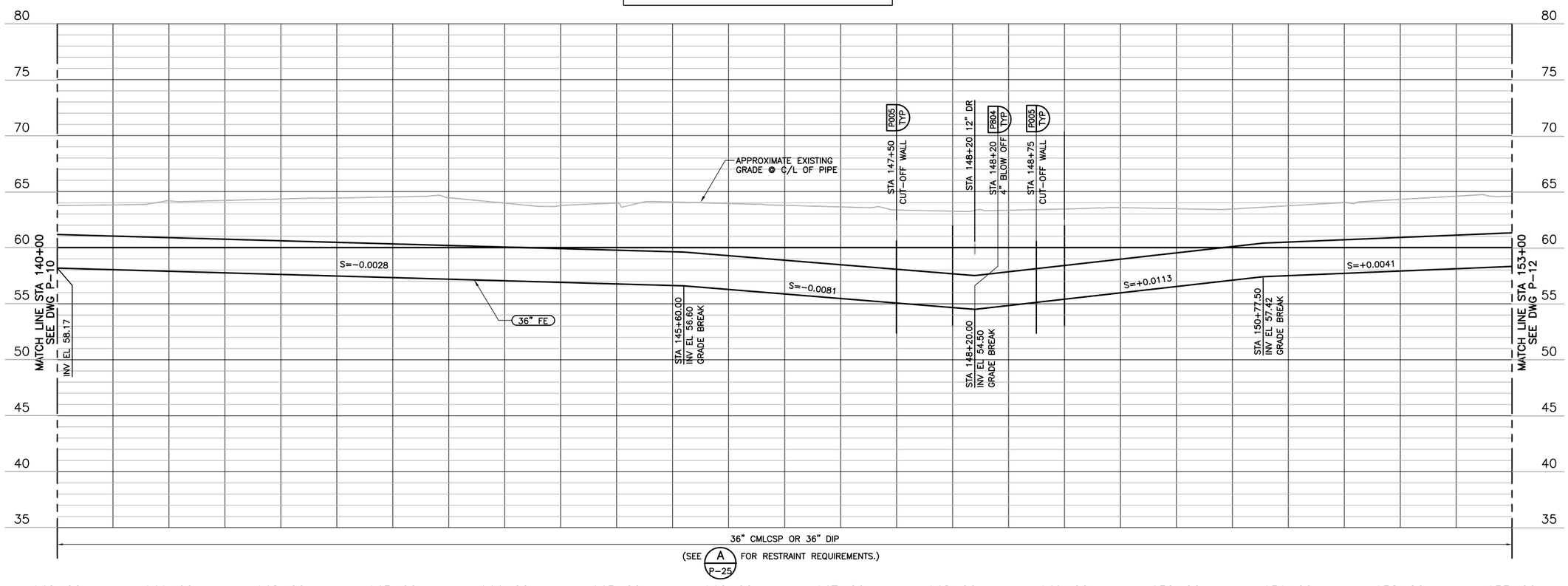

AVOID CUTTING UNDERGROUND UTILITY LINES. IT'S COSTLY.
Call before you Dig
1-800-227-2600
UNDERGROUND SERVICE (USA)

REV	DATE	BY	DESCRIPTION

RECORD DRAWINGS

DESIGNED PIO
DRAWN PAT
CHECKED BEH
DATE MAY 2012

DISCIPLINE ENGINEER: ** ORIGINAL SEALED BY MICHAEL J. HARTLAUB 12/07/11 C74901 **
PROJECT ENGINEER: ** ORIGINAL SEALED BY DARREN G. BAUNE 12/07/11 C68899 **
VICE PRESIDENT: ** ORIGINAL SEALED BY MICHAEL J. BRITTEN 12/07/11 C27729 **

carollo

CITY OF TURLOCK INC. 1908
STANISLAUS COUNTY, CALIFORNIA

HARDING DRAIN BYPASS
PUMP STATION AND PIPELINE
CIVIL
PIPELINE PLAN & PROFILE
STATION 140+00 TO STATION 153+00

VERIFY SCALES
BAR IS ONE INCH ON ORIGINAL DRAWING
0 1"
IF NOT ONE INCH ON THIS SHEET, ADJUST SCALES ACCORDINGLY

JOB NO. 6918B.10
DRAWING NO. P-11
SHEET NO. 34 OF 107

Last Saved By: ALaico 8-25-14 05:05pm

FILENAME: C:\pw_working\projectwise\alaico\dms60458\RCp11001 8-25-14 05:05pm ALaico XREFS: plan; G-BDR; UTILITY; outfallgrid; pipeline; ADDTOPO-OF; PIO-SIGN; PIO; rcprf001; NEWTID; Mjb; BEH; Alignment; S-01S101; CA-MJB; CA-DGB; CA-MJH; CA-AEB; CA-GRS; CA-KAM; Turlock; CA-ALM; CA-ALM_11-30-11; CA-DGB_11-30-11; CA-MJB_11-30-11; M-02M202 SADI0013; SADI0014; Turlck_City_LogoPMS_FNL;

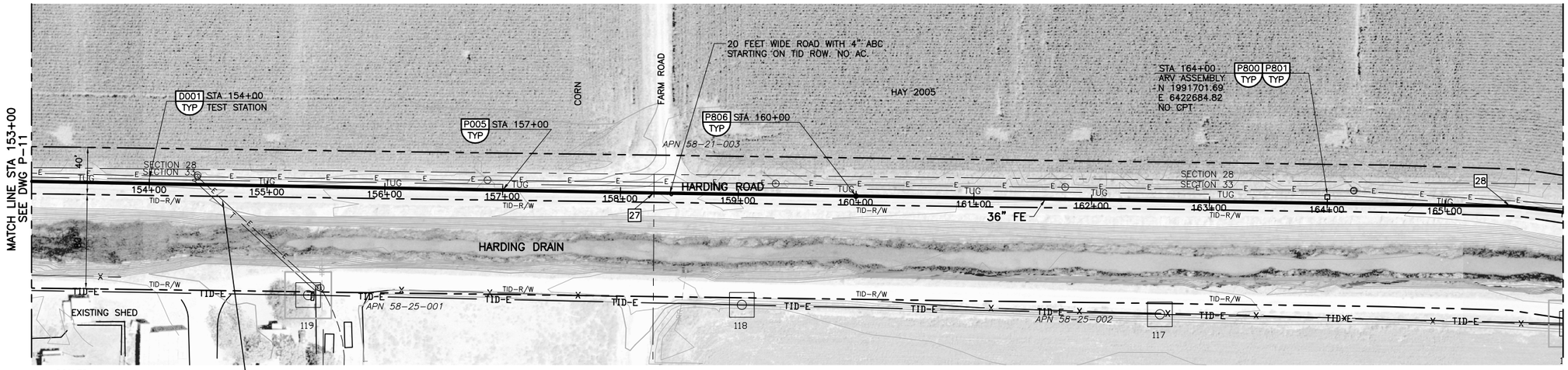

SCALES:
1" = 50' HORIZ
1" = 5' VERT

CAUTION:
LOW OVERHEAD LINES CROSSING

27 PI STA = 158+28.43
N = 1991704.95
E = 6422113.24
0.19' HORIZ DEF

28 PI STA = 165+55.47
N = 1991693.81
E = 6422840.19
5.625' HORIZ BEND

LEGEND:

- —TID—E— NEW POLES AND WIRES (TID=TURLOCK IRRIGATION DISTRICT).
- —TE—TE— LOCAL OVERHEAD TELEPHONE AND ELECTRICAL LINES ON SAME POLES.
- —E—E— OVERHEAD ELECTRIC LINES.
- —TUG— UNDERGROUND TELEPHONE
- 115KV STEEL TOWERS AT ANGLE OR WOOD ON STRAIGHT ALIGNMENTS.
- TID EASEMENT AROUND POLE

NOTES:

1. ALL GENERAL NOTES SHOWN ON DRAWING G-2 APPLY TO THIS DRAWING.
2. CONTRACTOR SHALL TAKE CAUTION WHEN WORKING NEAR TURLOCK IRRIGATION DISTRICT'S (TID) 115KV POWER LINE. CONTRACTOR SHALL CONTACT TID PRIOR TO BEGINNING WORK TO DETERMINE ALL REQUIREMENTS FOR WORKING NEAR THE UTILITY. CONTRACTOR SHALL PROVIDE SAFETY TRAINING FOR ALL PERSONNEL OPERATING EQUIPMENT OR WORKING NEAR THE UTILITY.
3. TRENCH SHORING IS REQUIRED FOR 36" FE PIPE INSTALLATION FROM STATION 10+50.06 TO STATION 305+00. SEE SPECIFICATION 02260.
4. CONTRACTOR SHALL BOND ALL PIPE JOINTS AND FITTINGS (DUCTILE OR STEEL) PER CATHODIC PROTECTION TYPICAL DETAILS.
5. CONTRACTOR SHALL RESTRAIN ALL FITTINGS WITH DEFLECTION GREATER THAN 5 DEGREES PER DETAIL A ON DRAWING P-25.
6. FROM CROWS LANDING ROAD (APPROXIMATE STATION 105+25 OF THE 36" FE) TO 300' WEST OF MORGAN ROAD (SEE DRAWING P-13, APPROXIMATE STATION 166+70 OF THE 36" FE) HARDING ROAD IS LOCATED WITHIN A DEDICATED STANISLAUS COUNTY RIGHT OF WAY.

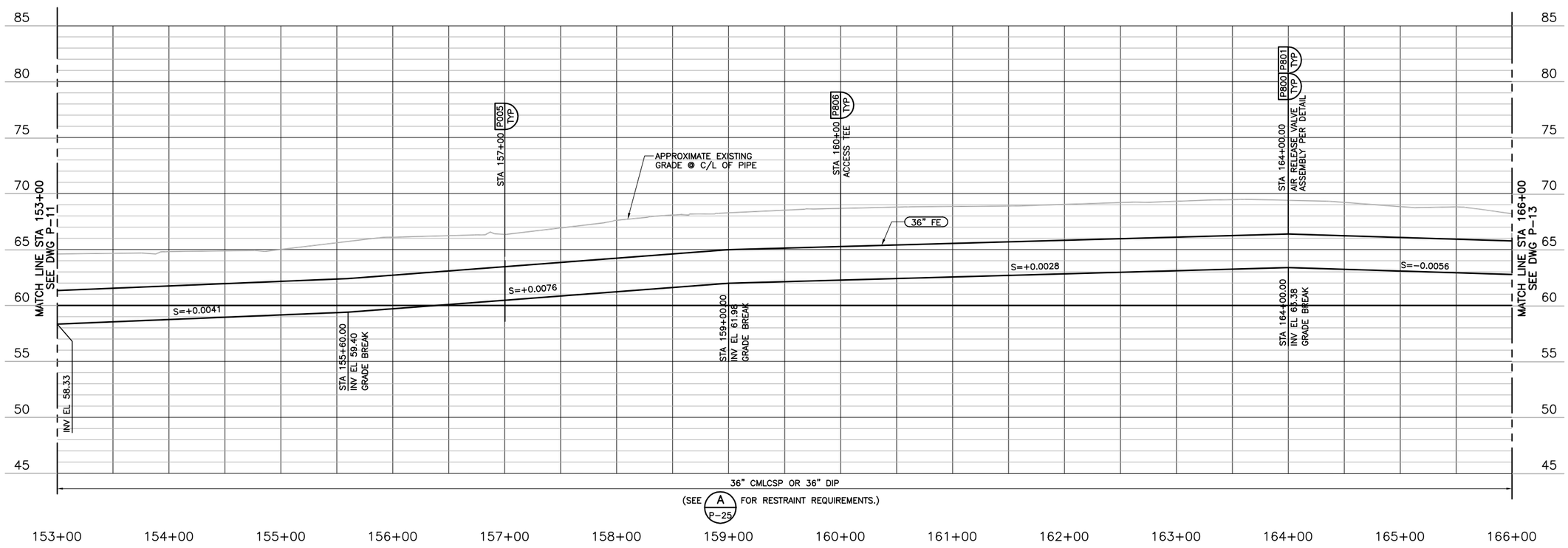

AVOID CUTTING UNDERGROUND UTILITY LINES. IT'S COSTLY.
Call before you Dig
1-800-227-2600
UNDERGROUND SERVICE (USA)

REV	DATE	BY	DESCRIPTION

RECORD DRAWINGS

DESIGNED PIO
DRAWN PAT
CHECKED BEH
DATE MAY 2012

DISCIPLINE ENGINEER: ** ORIGINAL SEALED BY MICHAEL J. HARTLAUB 12/07/11 C74901 **
PROJECT ENGINEER: ** ORIGINAL SEALED BY DARREN G. BAUNE 12/07/11 C68899 **
VICE PRESIDENT: ** ORIGINAL SEALED BY MICHAEL J. BRITTEN 12/07/11 C27729 **

carollo

CITY OF TURLOCK INC. 1908
STANISLAUS COUNTY, CALIFORNIA

HARDING DRAIN BYPASS
PUMP STATION AND PIPELINE
CIVIL
PIPELINE PLAN & PROFILE
STATION 153+00 TO STATION 166+00

VERIFY SCALES
BAR IS ONE INCH ON ORIGINAL DRAWING
0 1"
IF NOT ONE INCH ON THIS SHEET, ADJUST SCALES ACCORDINGLY

JOB NO. 6918B.10
DRAWING NO. P-12
SHEET NO. 35 OF 107

FILENAME: C:\pw_working\projectwise\alaico\dms60458\RCp12001 8-25-14 05:06pm ALaico XREFS: plan; G-BDR; UTILITY; Turlock; pipeline; ADDTOPO-OF; PIO; PIO-SIGN; rcprf001; NEWTID; Mjb; BEH; Alignment; S-01S101; CA-MJB; CA-DGB; CA-MJH; CA-AEB; CA-GRS; CA-KAM; CA-ALM; CA-ALM_11-30-11; CA-DGB_11-30-11; CA-MJB_11-30-11; M-02M202 SADI0014; SADI0015; SADI0016; Turlck_City_LogoPMS_FNL;

Last Saved By: Alaico 8-25-14 05:06pm

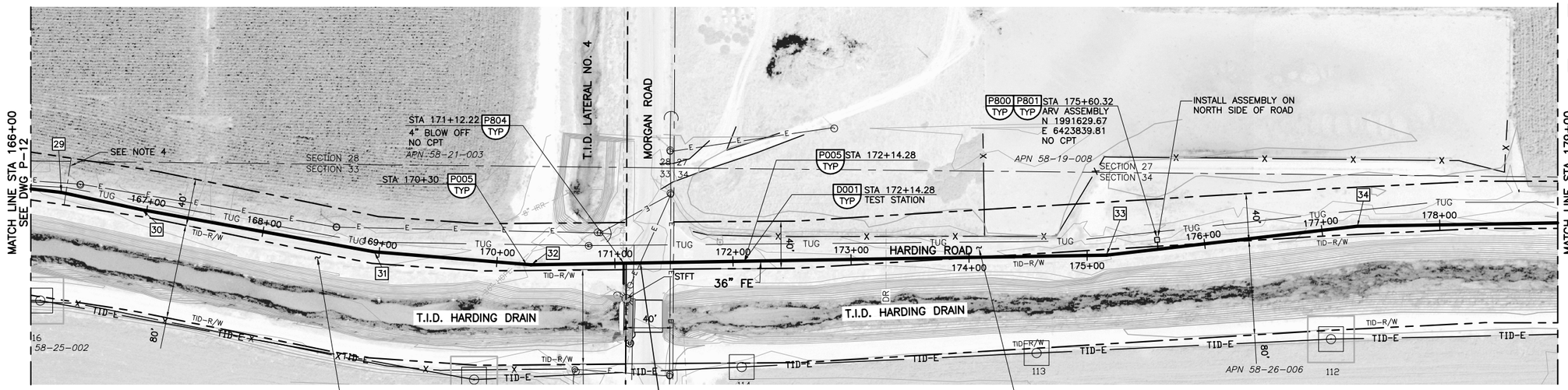

SCALES:
1" = 50' HORIZ
1" = 5' VERT

20 FEET WIDE ROAD WITH 4" ABC,
NO AC STARTING ON TID ROW

CAUTION:
LOW OVERHEAD LINES CROSSING

15 FEET WIDE ROAD WITH 4" ABC,
NO AC STARTING ON TID ROW

8. CONTRACTOR SHALL INSTALL THE 36" FE WITHIN THE CROWS LANDING ROAD RIGHT OF WAY PER P003 TYP.

29 PI STA = 166+26.05
N = 1991685.81
E = 6422910.32
5.625° HORIZ BEND

30 PI STA = 166+95.83
N = 1991671.15
E = 6422978.54
1.83° HORIZ DEF

31 PI STA = 168+95.89
N = 1991635.38
E = 6423175.38
5.625° HORIZ BEND

32 PI STA = 170+29.04
N = 1991624.52
E = 6423308.08
5.625° HORIZ BEND

33 PI STA = 175+16.33
N = 1991632.60
E = 6423795.30
5.625° HORIZ BEND

34 PI STA = 177+30.21
N = 1991657.08
E = 6424007.77
5.625° HORIZ BEND

LEGEND:

- TID-E — NEW POLES AND WIRES (TID=TURLOCK IRRIGATION DISTRICT).
- TE — TE — LOCAL OVERHEAD TELEPHONE AND ELECTRICAL LINES ON SAME POLES.
- E — E — OVERHEAD ELECTRIC LINES.
- TUG — UNDERGROUND TELEPHONE
- 115KV STEEL TOWERS AT ANGLE OR WOOD ON STRAIGHT ALIGNMENTS.
- TID EASEMENT AROUND POLE

NOTES:

1. ALL GENERAL NOTES SHOWN ON DRAWING G-2 APPLY TO THIS DRAWING.
2. CONTRACTOR SHALL TAKE CAUTION WHEN WORKING NEAR TURLOCK IRRIGATION DISTRICT'S (TID) 115KV POWER LINE. CONTRACTOR SHALL CONTACT TID PRIOR TO BEGINNING WORK TO DETERMINE ALL REQUIREMENTS FOR WORKING NEAR THE UTILITY. CONTRACTOR SHALL PROVIDE SAFETY TRAINING FOR ALL PERSONNEL OPERATING EQUIPMENT OR WORKING NEAR THE UTILITY.
3. TRENCH SHORING IS REQUIRED FOR 36" FE PIPE INSTALLATION FROM STATION 10+50.06 TO STATION 305+00. SEE SPECIFICATION 02260.
4. CONTRACTOR SHALL BOND ALL PIPE JOINTS AND FITTINGS (DUCTILE OR STEEL) PER CATHODIC PROTECTION TYPICAL DETAILS.
5. CONTRACTOR SHALL RESTRAIN ALL FITTINGS WITH DEFLECTION GREATER THAN 5 DEGREES PER DETAIL A ON DRAWING P-25.
6. FROM CROWS LANDING ROAD (APPROXIMATE STATION 105+25) TO 300' WEST OF MORGAN ROAD (SEE DRAWING P-13, APPROXIMATE STATION 166+70) HARDING ROAD IS LOCATED WITHIN A DEDICATED STANISLAUS COUNTY RIGHT OF WAY.
7. FROM STATION 166+70 ON DRAWING P-13 TO STATION 304+25 ON DRAWING P-23 STANISLAUS COUNTY HAS PRESCRIPTIVE RIGHT OF WAY ONLY FOR HARDING ROAD.

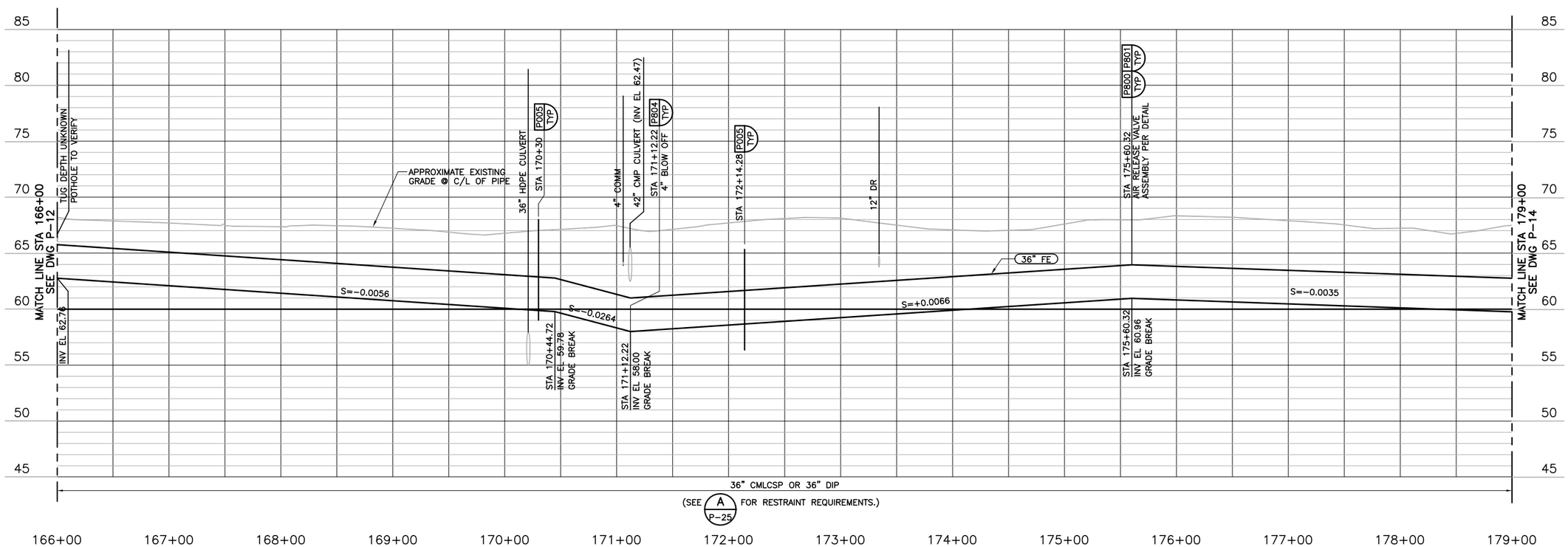

AVOID CUTTING UNDERGROUND UTILITY LINES. IT'S COSTLY.
Call before you Dig
1-800-227-2600
UNDERGROUND SERVICE (USA)

REV	DATE	BY	DESCRIPTION

RECORD DRAWINGS

DESIGNED PIO
DRAWN PAT
CHECKED BEH
DATE MAY 2012

DISCIPLINE ENGINEER: ** ORIGINAL SEALED BY MICHAEL J. HARTLAUB 12/07/11 C74901 **
PROJECT ENGINEER: ** ORIGINAL SEALED BY DARREN G. BAUNE 12/07/11 C68899 **
VICE PRESIDENT: ** ORIGINAL SEALED BY MICHAEL J. BRITTEN 12/07/11 C27729 **

carollo

CITY OF TURLOCK INC. 1908
STANISLAUS COUNTY, CALIFORNIA

HARDING DRAIN BYPASS
PUMP STATION AND PIPELINE
CIVIL
PIPELINE PLAN & PROFILE
STATION 166+00 TO STATION 179+00

VERIFY SCALES
BAR IS ONE INCH ON ORIGINAL DRAWING
0 1"
IF NOT ONE INCH ON THIS SHEET, ADJUST SCALES ACCORDINGLY

JOB NO. 6918B.10
DRAWING NO. P-13
SHEET NO. 36 OF 107

FILENAME: C:\pw_working\projectwise\alaico\dms60458\RCp13001 8-25-14 05:07pm ALaico XREFS: plan; G-BDR; UTILITY; Turlock; rcprf001; pipeline; ADDTOPO-OF; NEWTID; Mjb; BEH; Alignment; S-01S101; CA-MJB; CA-DGB; CA-MJH; CA-AEB; CA-GRS; CA-KAM; CA-ALM; CA-ALM_11-30-11; CA-DGB_11-30-11; CA-MJB_11-30-11; M-02M202 SADI0016; SADI0017; Turlck_City_LogoPMS_FNL;

Last Saved By: ALaico 8-25-14 05:06pm

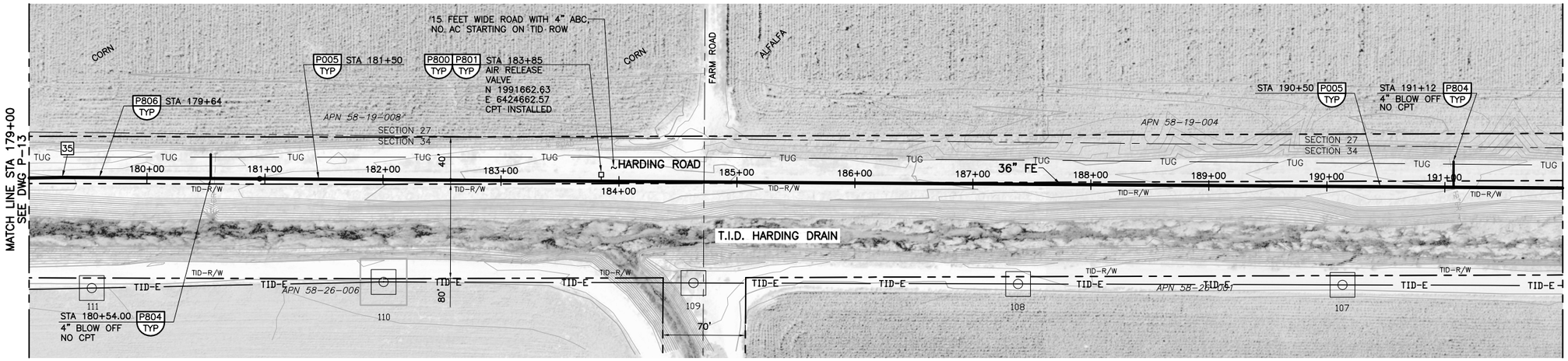

SCALES:
1" = 50' HORIZ
1" = 5' VERT

35 PI STA = 179+28.26
N = 1991660.37
E = 6424205.80
1.36' HORIZ DEF

LEGEND:

- TID-E — NEW POLES AND WIRES (TID=TURLOCK IRRIGATION DISTRICT).
- TE — TE — LOCAL OVERHEAD TELEPHONE AND ELECTRICAL LINES ON SAME POLES.
- E — E — OVERHEAD ELECTRIC LINES.
- TUG —— UNDERGROUND TELEPHONE
- 115KV STEEL TOWERS AT ANGLE AND WOOD ON STRAIGHT ALIGNMENTS.
- TID EASEMENT AROUND POLE

NOTES:

1. ALL GENERAL NOTES SHOWN ON DRAWING G-2 APPLY TO THIS DRAWING.
2. CONTRACTOR SHALL TAKE CAUTION WHEN WORKING NEAR TURLOCK IRRIGATION DISTRICT'S (TID) 115KV POWER LINE. CONTRACTOR SHALL CONTACT TID PRIOR TO BEGINNING WORK TO DETERMINE ALL REQUIREMENTS FOR WORKING NEAR THE UTILITY. CONTRACTOR SHALL PROVIDE SAFETY TRAINING FOR ALL PERSONNEL OPERATING EQUIPMENT OR WORKING NEAR THE UTILITY.
3. TRENCH SHORING IS REQUIRED FOR 36" FE PIPE INSTALLATION FROM STATION 10+50.06 TO STATION 305+00. SEE SPECIFICATION 02260.
4. CONTRACTOR SHALL BOND ALL PIPE JOINTS AND FITTINGS (DUCTILE OR STEEL) PER CATHODIC PROTECTION TYPICAL DETAILS.
5. CONTRACTOR SHALL RESTRAIN ALL FITTINGS WITH DEFLECTION GREATER THAN 5 DEGREES PER DETAIL A ON DRAWING P-25.
6. FROM STATION 166+70 ON DRAWING P-13 TO STATION 304+25 ON DRAWING P-23 STANISLAUS COUNTY HAS PRESCRIPTIVE RIGHT OF WAY ONLY FOR HARDING ROAD.

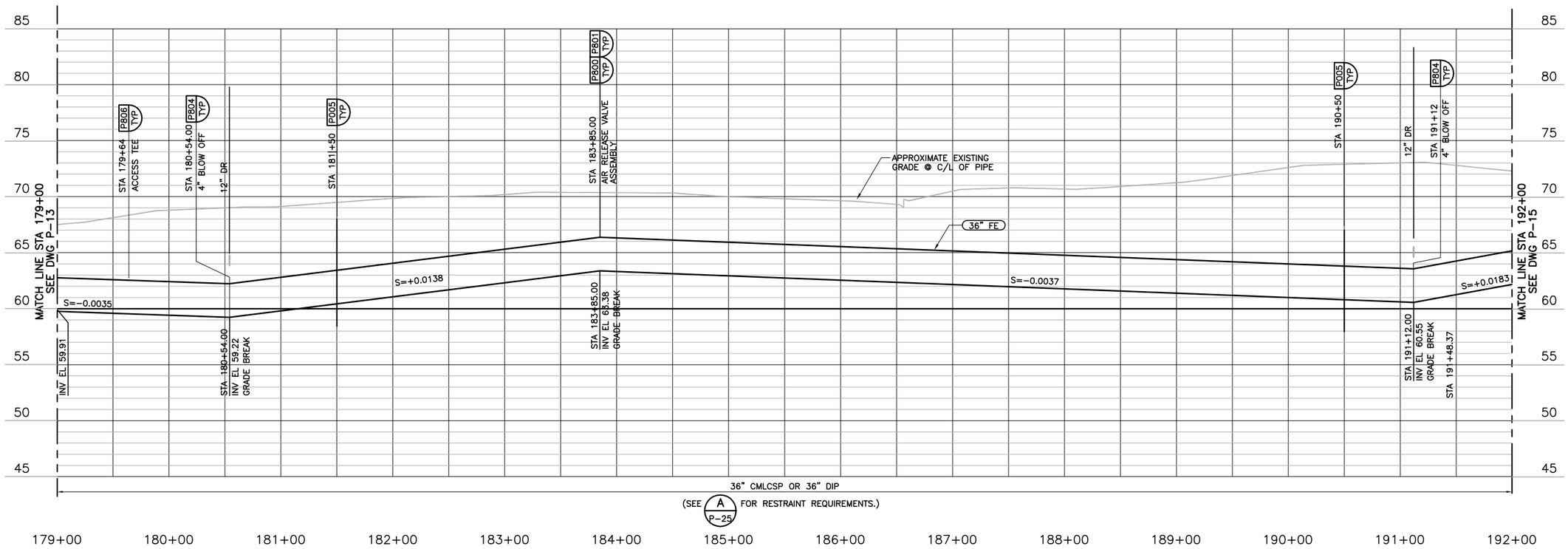

AVOID CUTTING UNDERGROUND UTILITY LINES. IT'S COSTLY.
Call before you Dig
1-800-227-2600
UNDERGROUND SERVICE (USA)

REV	DATE	BY	DESCRIPTION

RECORD DRAWINGS

DESIGNED PIO
DRAWN PAT
CHECKED BEH
DATE MAY 2012

DISCIPLINE ENGINEER: ** ORIGINAL SEALED BY MICHAEL J. HARTLAUB 12/07/11 C74901 **

PROJECT ENGINEER: ** ORIGINAL SEALED BY DARREN G. BAUNE 12/07/11 C68899 **

VICE PRESIDENT: ** ORIGINAL SEALED BY MICHAEL J. BRITTEN 12/07/11 C27729 **

carollo

CITY OF TURLOCK INC. 1908
STANISLAUS COUNTY, CALIFORNIA

HARDING DRAIN BYPASS
PUMP STATION AND PIPELINE
CIVIL
PIPELINE PLAN & PROFILE
STATION 179+00 TO STATION 192+00

VERIFY SCALES
BAR IS ONE INCH ON ORIGINAL DRAWING
0 1"
IF NOT ONE INCH ON THIS SHEET, ADJUST SCALES ACCORDINGLY

JOB NO. 6918B.10
DRAWING NO. P-14
SHEET NO. 37 OF 107

Last Saved By: ALaico 8-25-14 05:07pm

FILENAME: C:\pw_working\projectwise\alaico\dms60458\RCp14001 8-25-14 05:07pm ALaico XREFS: plan; G-BDR; UTILITY; Turlock; rcprf001; pipeline; ADDTOPO-OF; NEWTID; Mjb; BEH; Alignment; S-01S101; CA-MJB; CA-DGB; CA-MJH; CA-AEB; CA-GRS; CA-KAM; CA-ALM; CA-ALM_11-30-11; CA-DGB_11-30-11; CA-MJB_11-30-11; M-02M202 SADI0017; SADI0018; Turlck_City_LogoPMS_FNL;

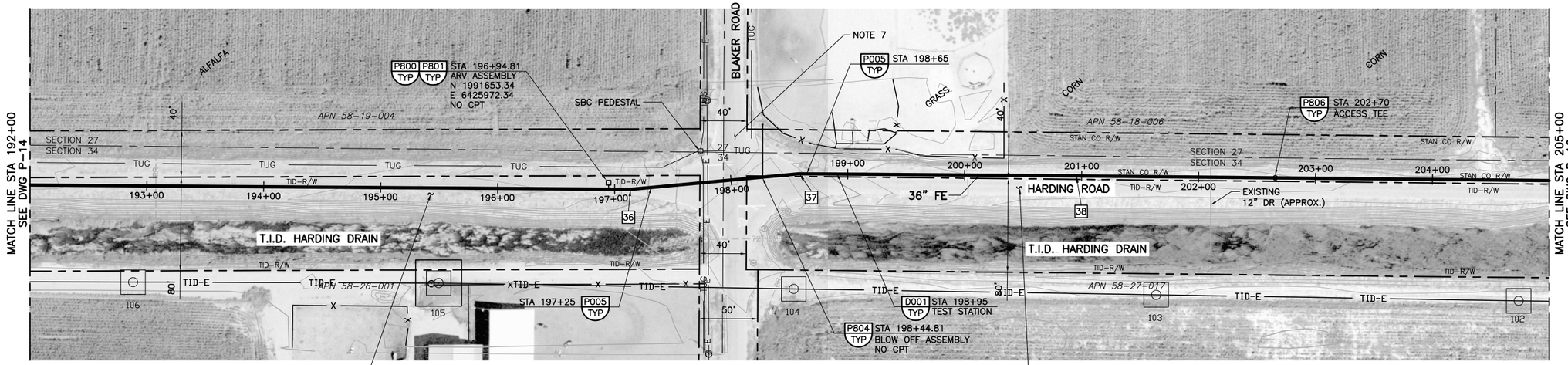

SCALES:
1" = 50' HORIZ
1" = 5' VERT

36 PI STA = 197+13.65
N = 1991647.72
E = 6425991.14
5.625° HORIZ BEND

37 PI STA = 198+58.46
N = 1991660.89
E = 6426135.35
5.625° HORIZ BEND

38 PI STA = 200+95.61
N = 1991659.21
E = 6426372.50
0.18° HORIZ DEF

LEGEND:

- TID-E — NEW POLES AND WIRES (TID=TURLOCK IRRIGATION DISTRICT).
- TE — TE — LOCAL OVERHEAD TELEPHONE AND ELECTRICAL LINES ON SAME POLES.
- E — E — OVERHEAD ELECTRIC LINES.
- TUG — UNDERGROUND TELEPHONE
- 115KV STEEL TOWERS AT ANGLE AND WOOD ON STRAIGHT ALIGNMENTS. TID EASEMENT AROUND POLE

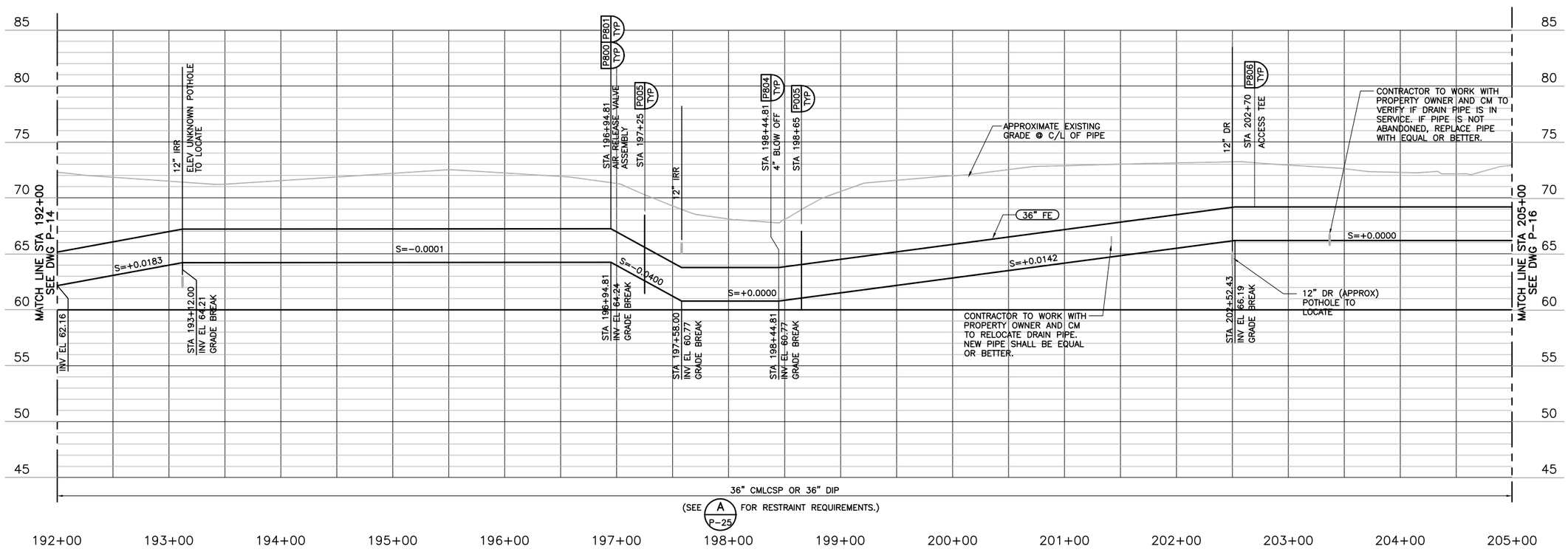

NOTES:

1. ALL GENERAL NOTES SHOWN ON DRAWING G-2 APPLY TO THIS DRAWING.
2. CONTRACTOR SHALL TAKE CAUTION WHEN WORKING NEAR TURLOCK IRRIGATION DISTRICT'S (TID) 115KV POWER LINE. CONTRACTOR SHALL CONTACT TID PRIOR TO BEGINNING WORK TO DETERMINE ALL REQUIREMENTS FOR WORKING NEAR THE UTILITY. CONTRACTOR SHALL PROVIDE SAFETY TRAINING FOR ALL PERSONNEL OPERATING EQUIPMENT OR WORKING NEAR THE UTILITY.
3. TRENCH SHORING IS REQUIRED FOR 36" FE PIPE INSTALLATION FROM STATION 10+50.06 TO STATION 305+00. SEE SPECIFICATION 02260.
4. CONTRACTOR SHALL BOND ALL PIPE JOINTS AND FITTINGS (DUCTILE OR STEEL) PER CATHODIC PROTECTION TYPICAL DETAILS.
5. CONTRACTOR SHALL RESTRAIN ALL FITTINGS WITH DEFLECTION GREATER THAN 5 DEGREES PER DETAIL A ON DRAWING P-25.
6. FROM STATION 166+70 ON DRAWING P-13 TO STATION 304+25 ON DRAWING P-23 STANISLAUS COUNTY HAS PRESCRIPTIVE RIGHT OF WAY ONLY FOR HARDING ROAD.
7. CONTRACTOR SHALL INSTALL THE 36" FE WITHIN THE BLAKER ROAD RIGHT OF WAY PER P003 TYP.

AVOID CUTTING UNDERGROUND UTILITY LINES. IT'S COSTLY.
Call before you Dig
1-800-227-2600
UNDERGROUND SERVICE (USA)

REV	DATE	BY	DESCRIPTION

RECORD DRAWINGS

DESIGNED PIO
DRAWN PAT
CHECKED BEH
DATE MAY 2012

DISCIPLINE ENGINEER: ** ORIGINAL SEALED BY MICHAEL J. HARTLAUB 12/07/11 C74901 **
PROJECT ENGINEER: ** ORIGINAL SEALED BY DARREN G. BAUNE 12/07/11 C68899 **
VICE PRESIDENT: ** ORIGINAL SEALED BY MICHAEL J. BRITTEN 12/07/11 C27729 **

carollo

CITY OF TURLOCK INC. 1908
STANISLAUS COUNTY, CALIFORNIA

HARDING DRAIN BYPASS
PUMP STATION AND PIPELINE
CIVIL
PIPELINE PLAN & PROFILE
STATION 192+00 TO STATION 205+00

VERIFY SCALES
BAR IS ONE INCH ON ORIGINAL DRAWING
0 1"
IF NOT ONE INCH ON THIS SHEET, ADJUST SCALES ACCORDINGLY

JOB NO. 6918B.10
DRAWING NO. P-15
SHEET NO. 38 OF 107

Last Saved By: Alaico 8-25-14 05:08pm

FILENAME: C:\pw_working\projectwise\alaico\dms60458\RCp15001 8-25-14 05:08pm ALaico XREFS: plan; G-BDR; UTILITY; Turlock; rcprf001; pipeline; ADDTOPO-OF; NEWTID; Mjb; BEH; Alignment; S-01S101; CA-MJB; CA-DGB; CA-MJH; CA-AEB; CA-GRS; CA-KAM; CA-ALM; CA-ALM_11-30-11; CA-DGB_11-30-11; CA-MJB_11-30-11; M-02M202 SADI0018; SADI0019; Turlck_City_LogoPMS_FNL;

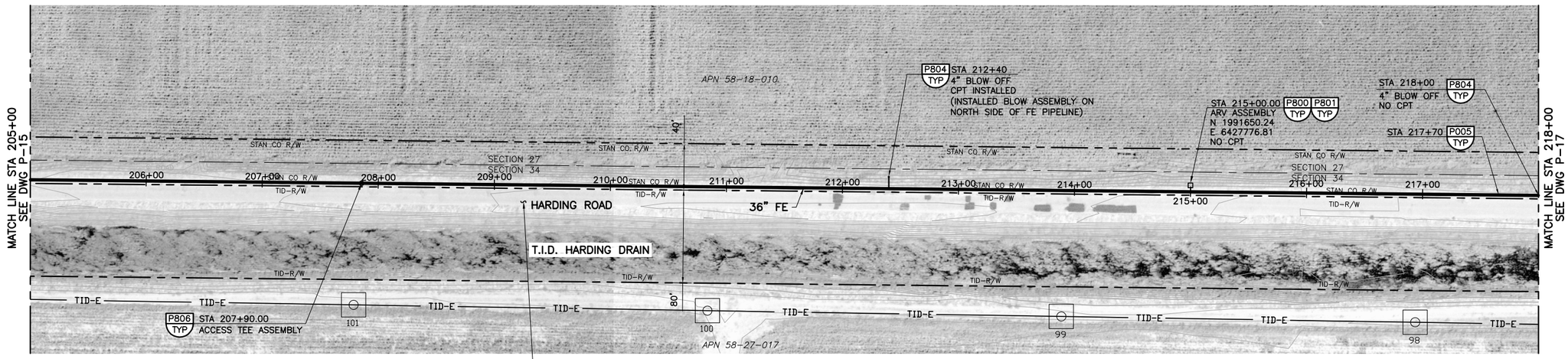

SCALES:
1" = 50' HORIZ
1" = 5' VERT

LEGEND:

- — TID–E — NEW POLES AND WIRES (TID=TURLOCK IRRIGATION DISTRICT).
- — TE — TE – LOCAL OVERHEAD TELEPHONE AND ELECTRICAL LINES ON SAME POLES.
- — E — E — OVERHEAD ELECTRIC LINES.
- — TUG — UNDERGROUND TELEPHONE
- 115KV STEEL TOWERS AT ANGLE OR WOOD ON STRAIGHT ALIGNMENTS.
- TID EASEMENT AROUND POLE

NOTES:

1. ALL GENERAL NOTES SHOWN ON DRAWING G–2 APPLY TO THIS DRAWING.
2. CONTRACTOR SHALL TAKE CAUTION WHEN WORKING NEAR TURLOCK IRRIGATION DISTRICT'S (TID) 115KV POWER LINE. CONTRACTOR SHALL CONTACT TID PRIOR TO BEGINNING WORK TO DETERMINE ALL REQUIREMENTS FOR WORKING NEAR THE UTILITY. CONTRACTOR SHALL PROVIDE SAFETY TRAINING FOR ALL PERSONNEL OPERATING EQUIPMENT OR WORKING NEAR THE UTILITY.
3. TRENCH SHORING IS REQUIRED FOR 36" FE PIPE INSTALLATION FROM STATION 10+50.06 TO STATION 305+00. SEE SPECIFICATION 02260.
4. CONTRACTOR SHALL BOND ALL PIPE JOINTS AND FITTINGS (DUCTILE OR STEEL) PER CATHODIC PROTECTION TYPICAL DETAILS.
5. CONTRACTOR SHALL RESTRAIN ALL FITTINGS WITH DEFLECTION GREATER THAN 5 DEGREES PER DETAIL A ON DRAWING P–25.
6. FROM STATION 166+70 ON DRAWING P–13 TO STATION 304+25 ON DRAWING P–23 STANISLAUS COUNTY HAS PRESCRIPTIVE RIGHT OF WAY ONLY FOR HARDING ROAD.

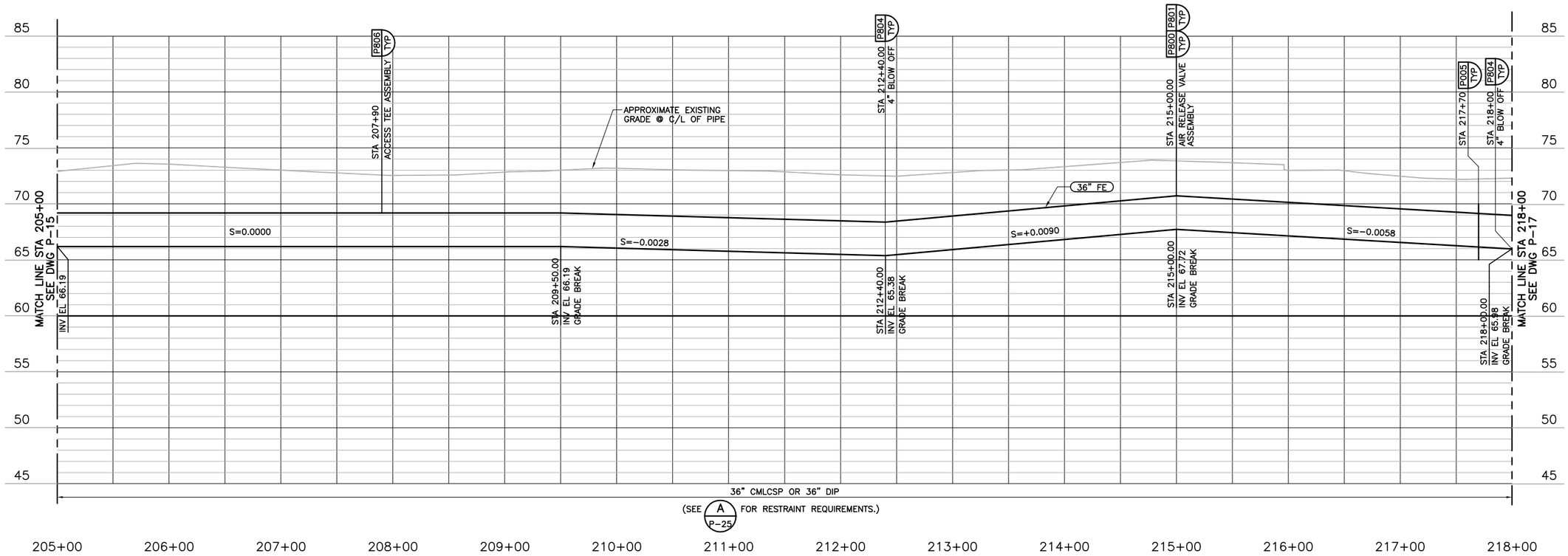

AVOID CUTTING UNDERGROUND UTILITY LINES. IT'S COSTLY.
Call before you Dig
1-800-227-2600
UNDERGROUND SERVICE (USA)

REV	DATE	BY	DESCRIPTION

RECORD DRAWINGS

DESIGNED PIO
DRAWN PAT
CHECKED BEH
DATE MAY 2012

DISCIPLINE ENGINEER: ** ORIGINAL SEALED BY MICHAEL J. HARTLAUB 12/07/11 C74901 **
PROJECT ENGINEER: ** ORIGINAL SEALED BY DARREN G. BAUNE 12/07/11 C68899 **
VICE PRESIDENT: ** ORIGINAL SEALED BY MICHAEL J. BRITTEN 12/07/11 C27729 **

carollo

CITY OF TURLOCK INC. 1908
STANISLAUS COUNTY, CALIFORNIA

HARDING DRAIN BYPASS
PUMP STATION AND PIPELINE
CIVIL
PIPELINE PLAN & PROFILE
STATION 205+00 TO STATION 218+00

VERIFY SCALES
BAR IS ONE INCH ON ORIGINAL DRAWING
0 1"
IF NOT ONE INCH ON THIS SHEET, ADJUST SCALES ACCORDINGLY

JOB NO. 6918B.10
DRAWING NO. P–16
SHEET NO. 39 OF 107

Last Saved By: ALaico 8-25-14 05:09pm

FILENAME: C:\pw_working\projectwise\alaico\dms60458\RCp16001 8-25-14 05:09pm ALaico XREFS: plan; G-BDR; UTILITY; Turlock; rcprf001; pipeline; ADDTOPO-OF; NEWTID; Mjb; BEH; Alignment; S-01S101; CA-MJB; CA-DGB; CA-MJH; CA-AEB; CA-GRS; CA-KAM; CA-ALM; CA-ALM_11-30-11; CA-DGB_11-30-11; CA-MJB_11-30-11; M-02M202 SADI0019; SADI0020; Turlck_City_LogoPMS_FNL;

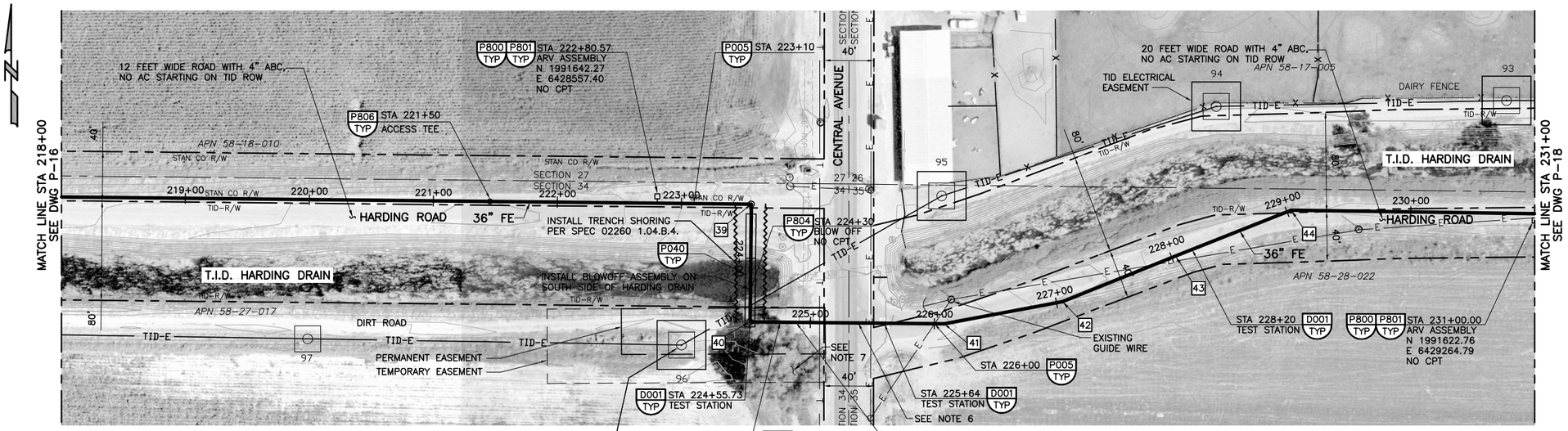

SCALES:
1" = 50' HOR
1" = 5' VERT

CAUTION:
CONTRACTOR SHALL TAKE CAUTION WHEN WORKING NEAR TURLOCK IRRIGATION DISTRICT'S (TID) 115KV POWER LINE. CONTRACTOR SHALL CONTACT TID PRIOR TO BEGINNING WORK TO DETERMINE ALL REQUIREMENTS FOR WORKING NEAR THE UTILITY. CONTRACTOR SHALL PROVIDE SAFETY TRAINING FOR ALL PERSONNEL OPERATING EQUIPMENT OR WORKING NEAR THE UTILITY.

CONTRACTOR SHALL INSTALL 36" FE CROSSING OF 30" IRR AT STA 225+00 DURING THE NON-IRRIGATION SEASON (NOV 1 TO MAR 14). CONTRACTOR SHALL NOTIFY TID 15 DAYS PRIOR TO START OF WORK. THE EXISTING IPE IS CIP CONCRETE AND SHALL BE PROTECTED DURING CONSTRUCTION. CONTRACTOR SHALL SUBMIT PROTECTION PLAN TO ENGINEER.

39 PI STA = 223+56.33
N = 1991635.99
E = 6428633.10
90° HORIZ BEND

40 PI STA = 224+51.34
N = 1991540.98
E = 6428632.12
90° HORIZ BEND

41 PI STA = 226+07.84
N = 1991538.94
E = 6428787.29
11.25° HORIZ BEND

42 PI STA = 227+04.85
N = 1991557.32
E = 6428883.94
11.25° HORIZ BEND

43 PI STA = 228+03.18
N = 1991594.01
E = 6428975.17
0.24° HORIZ DEF

44 PI STA = 229+03.62
N = 1991631.10
E = 6429068.51
22.50° HORIZ BEND

LEGEND:

- —TID—E— NEW POLES AND WIRES (TID=TURLOCK IRRIGATION DISTRICT).
- —TE—TE— LOCAL OVERHEAD TELEPHONE AND ELECTRICAL LINES ON SAME POLES.
- —E—E— OVERHEAD ELECTRIC LINES.
- —TUG— UNDERGROUND TELEPHONE
- 115KV STEEL TOWERS AT ANGLE OR WOOD ON STRAIGHT ALIGNMENTS.
- TID EASEMENT AROUND POLE
- SHORING REQUIRED

NOTES:

1. ALL GENERAL NOTES SHOWN ON DRAWING G-2 APPLY TO THIS DRAWING.
2. TRENCH SHORING IS REQUIRED FOR 36" FE PIPE INSTALLATION FROM STATION 10+50.06 TO STATION 305+00. SEE SPECIFICATION 02260.
3. CONTRACTOR SHALL BOND ALL PIPE JOINTS AND FITTINGS (DUCTILE OR STEEL) PER CATHODIC PROTECTION TYPICAL DETAILS.
4. CONTRACTOR SHALL RESTRAIN ALL FITTINGS WITH DEFLECTION GREATER THAN 5 DEGREES PER DETAIL A ON DRAWING P-25.
5. FROM STATION 166+70 ON DRAWING P-13 TO STATION 304+25 ON DRAWING P-23 STANISLAUS COUNTY HAS PRESCRIPTIVE RIGHT OF WAY ONLY FOR HARDING ROAD.
6. CONTRACTOR SHALL INSTALL THE 36" FE WITHIN THE CENTRAL AVENUE RIGHT OF WAY PER P003 TYP.
7. TREES AND SHRUBS HAVE BEEN REMOVED.
8. REMOVE AND REPLACE EXISTING 15' STEEL GATE

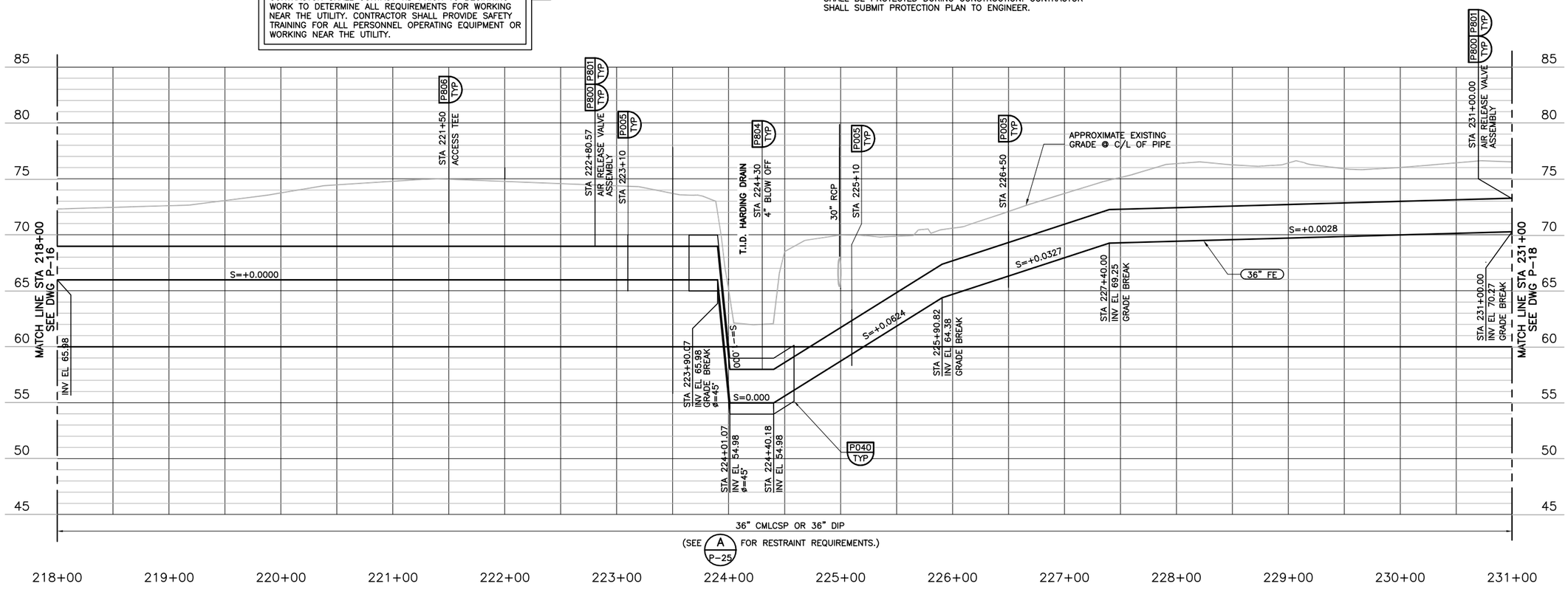

AVOID CUTTING UNDERGROUND UTILITY LINES. IT'S COSTLY.
Call before you Dig
1-800-227-2600
UNDERGROUND SERVICE (USA)

REV	DATE	BY	DESCRIPTION
			RECORD DRAWINGS

DESIGNED PIO
DRAWN PAT
CHECKED BEH
DATE MAY 2012

DISCIPLINE ENGINEER: ** ORIGINAL SEALED BY MICHAEL J. HARTLAUB 12/07/11 C74901 **
PROJECT ENGINEER: ** ORIGINAL SEALED BY DARREN G. BAUNE 12/07/11 C68899 **
VICE PRESIDENT: ** ORIGINAL SEALED BY MICHAEL J. BRITTEN 12/07/11 C27729 **

carollo

CITY OF TURLOCK INC. 1908
STANISLAUS COUNTY, CALIFORNIA

HARDING DRAIN BYPASS
PUMP STATION AND PIPELINE
CIVIL
PIPELINE PLAN & PROFILE
STATION 218+00 TO STATION 231+00

VERIFY SCALES
BAR IS ONE INCH ON ORIGINAL DRAWING
0 1"
IF NOT ONE INCH ON THIS SHEET, ADJUST SCALES ACCORDINGLY

JOB NO. 6918B.10
DRAWING NO. P-17
SHEET NO. 40 OF 107

Last Saved By: Alaico 8-25-14 05:09pm

FILENAME: C:\pw_working\projectwise\alaico\dms60458\RCp17001 8-25-14 05:09pm ALaico XREFS: plan; G-BDR; UTILITY; Turlock; rcprf001; pipeline; ADDTOPO-OF; NEWTID; Mjb; BEH; Alignment; S-01S101; CA-MJB; CA-DGB; CA-MJH; CA-AEB; CA-GRS; CA-KAM; CA-ALM; CA-ALM_11-30-11; CA-DGB_11-30-11; CA-MJB_11-30-11; M-02M202 SADI0020; SADI0021; Turlck_City_LogoPMS_FNL;

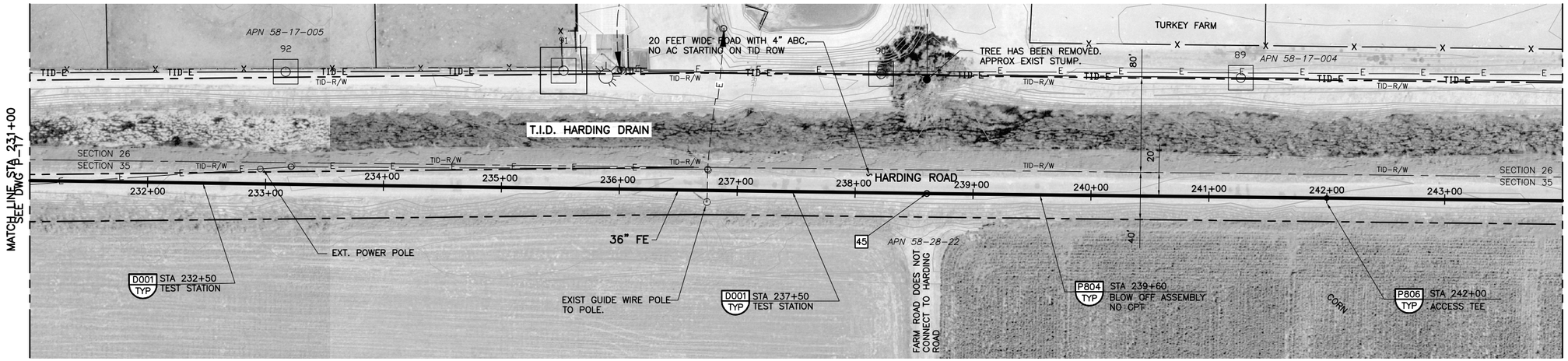

SCALES:
1" = 50' HORIZ
1" = 5' VERT

45 PI STA = 238+60.84
N = 1991617.26
E = 6430025.63
0.18' HORIZ DEF

LEGEND:

- TID-E — NEW POLES AND WIRES (TID=TURLOCK IRRIGATION DISTRICT).
- TE — TE — LOCAL OVERHEAD TELEPHONE AND ELECTRICAL LINES ON SAME POLES.
- E — E — OVERHEAD ELECTRIC LINES.
- TUG — UNDERGROUND TELEPHONE
- 115KV STEEL TOWERS AT ANGLE OR WOOD ON STRAIGHT ALIGNMENTS.
- TID EASEMENT AROUND POLE

NOTES:

1. ALL GENERAL NOTES SHOWN ON DRAWING G-2 APPLY TO THIS DRAWING.
2. CONTRACTOR SHALL TAKE CAUTION WHEN WORKING NEAR TURLOCK IRRIGATION DISTRICT'S (TID) 115KV POWER LINE. CONTRACTOR SHALL CONTACT TID PRIOR TO BEGINNING WORK TO DETERMINE ALL REQUIREMENTS FOR WORKING NEAR THE UTILITY. CONTRACTOR SHALL PROVIDE SAFETY TRAINING FOR ALL PERSONNEL OPERATING EQUIPMENT OR WORKING NEAR THE UTILITY.
3. TRENCH SHORING IS REQUIRED FOR 36" FE PIPE INSTALLATION FROM STATION 10+50.06 TO STATION 305+00. SEE SPECIFICATION 02260.
4. CONTRACTOR SHALL BOND ALL PIPE JOINTS AND FITTINGS (DUCTILE OR STEEL) PER CATHODIC PROTECTION TYPICAL DETAILS.
5. CONTRACTOR SHALL RESTRAIN ALL FITTINGS WITH DEFLECTION GREATER THAN 5 DEGREES PER DETAIL A ON DRAWING P-25.
6. FROM STATION 166+70 ON DRAWING P-13 TO STATION 304+25 ON DRAWING P-23 STANISLAUS COUNTY HAS PRESCRIPTIVE RIGHT OF WAY ONLY FOR HARDING ROAD.

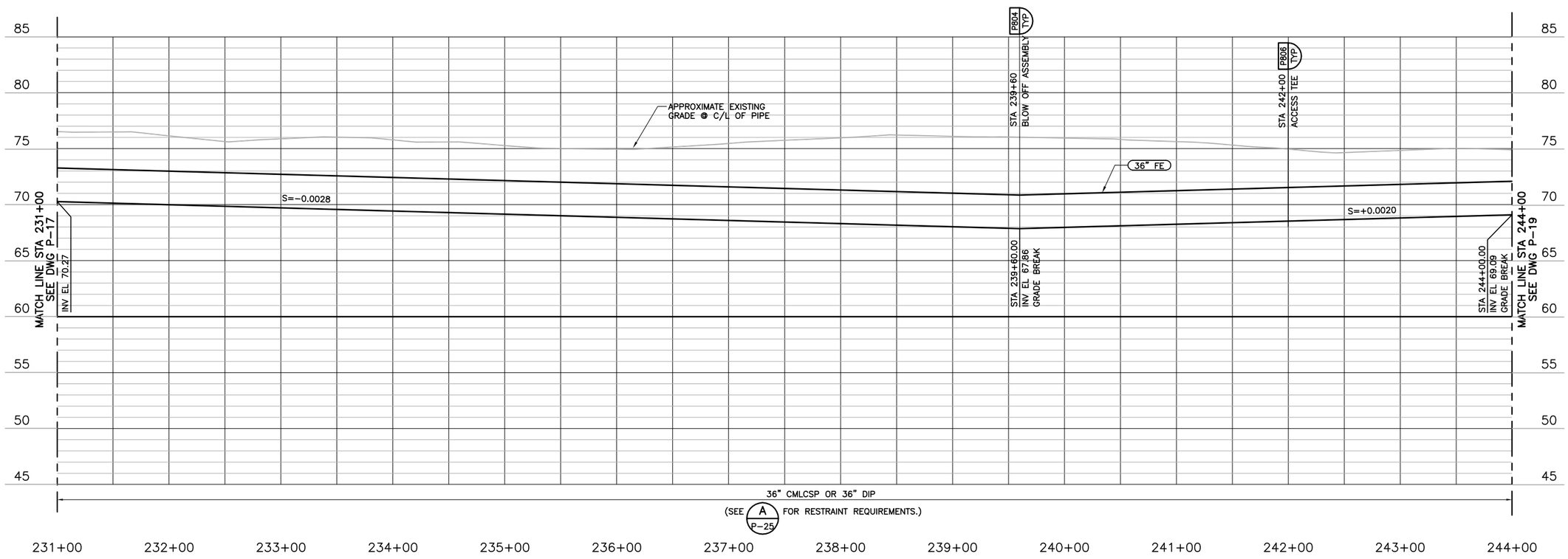

AVOID CUTTING UNDERGROUND UTILITY LINES. IT'S COSTLY.
Call before you Dig
1-800-227-2600
UNDERGROUND SERVICE (USA)

REV	DATE	BY	DESCRIPTION
			RECORD DRAWINGS

DESIGNED PIO
DRAWN PAT
CHECKED BEH
DATE MAY 2012

DISCIPLINE ENGINEER: ** ORIGINAL SEALED BY MICHAEL J. HARTLAUB 12/07/11 C74901 **
PROJECT ENGINEER: ** ORIGINAL SEALED BY DARREN G. BAUNE 12/07/11 C68899 **
VICE PRESIDENT: ** ORIGINAL SEALED BY MICHAEL J. BRITTEN 12/07/11 C27729 **

carollo

CITY OF TURLOCK INC. 1908
STANISLAUS COUNTY, CALIFORNIA

HARDING DRAIN BYPASS
PUMP STATION AND PIPELINE
CIVIL
PIPELINE PLAN & PROFILE
STATION 231+00 TO STATION 244+00

VERIFY SCALES
BAR IS ONE INCH ON ORIGINAL DRAWING
0 1"
IF NOT ONE INCH ON THIS SHEET, ADJUST SCALES ACCORDINGLY

JOB NO. 6918B.10
DRAWING NO. P-18
SHEET NO. 41 OF 107

Last Saved By: Alaico 8-25-14 05:10pm

FILENAME: C:\pw_working\projectwise\alaico\dms60458\RCp18001 8-25-14 05:10pm ALaico XREFS: plan; G-BDR; UTILITY; Turlock; rcprf001; pipeline; ADDTOPO-OF; NEWTID; Mjb; BEH; Alignment; S-01S101; CA-MJB; CA-DGB; CA-MJH; CA-AEB; CA-GRS; CA-KAM; CA-ALM; CA-ALM_11-30-11; CA-DGB_11-30-11; CA-MJB_11-30-11; M-02M202 SADI0021; SADI0022; Turlck_City_LogoPMS_FNL;

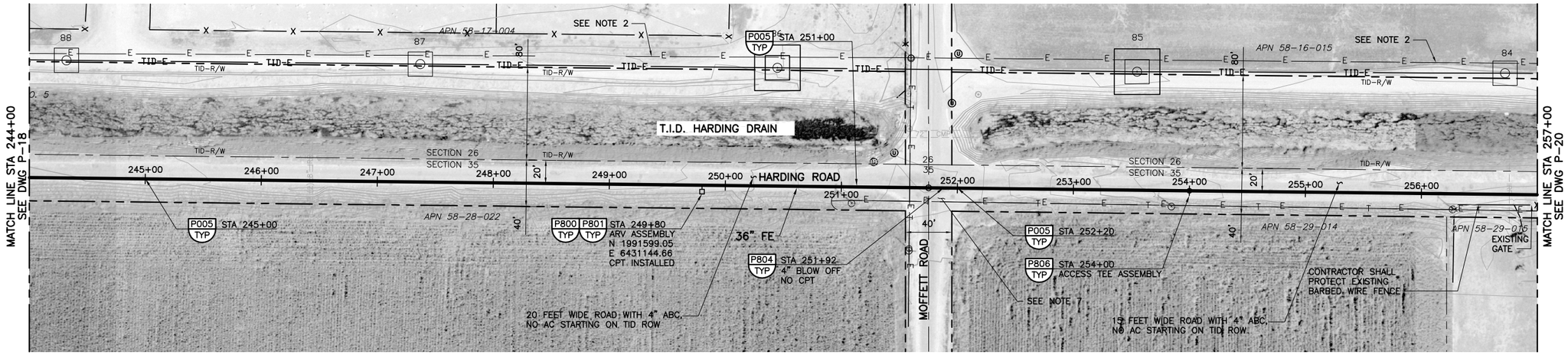

SCALES:
1" = 50' HORIZ
1" = 5' VERT

LEGEND:

- —TID—E— NEW POLES AND WIRES (TID=TURLOCK IRRIGATION DISTRICT).
- —TE—TE— LOCAL OVERHEAD TELEPHONE AND ELECTRICAL LINES ON SAME POLES.
- —E—E— OVERHEAD ELECTRIC LINES.
- —TUG— UNDERGROUND TELEPHONE
- 115KV STEEL TOWERS AT ANGLE OR WOOD ON STRAIGHT ALIGNMENTS.
- TID EASEMENT AROUND POLE

NOTES:

1. ALL GENERAL NOTES SHOWN ON DRAWING G-2 APPLY TO THIS DRAWING.
2. CONTRACTOR SHALL TAKE CAUTION WHEN WORKING NEAR TURLOCK IRRIGATION DISTRICT'S (TID) 115KV POWER LINE. CONTRACTOR SHALL CONTACT TID PRIOR TO BEGINNING WORK TO DETERMINE ALL REQUIREMENTS FOR WORKING NEAR THE UTILITY. CONTRACTOR SHALL PROVIDE SAFETY TRAINING FOR ALL PERSONNEL OPERATING EQUIPMENT OR WORKING NEAR THE UTILITY.
3. TRENCH SHORING IS REQUIRED FOR 36" FE PIPE INSTALLATION FROM STATION 10+50.06 TO STATION 305+00. SEE SPECIFICATION 02260.
4. CONTRACTOR SHALL BOND ALL PIPE JOINTS AND FITTINGS (DUCTILE OR STEEL) PER CATHODIC PROTECTION TYPICAL DETAILS.
5. CONTRACTOR SHALL RESTRAIN ALL FITTINGS WITH DEFLECTION GREATER THAN 5 DEGREES PER DETAIL A ON DRAWING P-25.
6. FROM STATION 166+70 ON DRAWING P-13 TO STATION 304+25 ON DRAWING P-23 STANISLAUS COUNTY HAS PRESCRIPTIVE RIGHT OF WAY ONLY FOR HARDING ROAD.
7. CONTRACTOR SHALL INSTALL THE 36" FE WITHIN THE MOFFET ROAD RIGHT OF WAY PER P003 TYP.
8. CONTRACTOR SHALL WORK WITH OWNER AND CM TO VERIFY THIS PIPE IS ABANDONED.

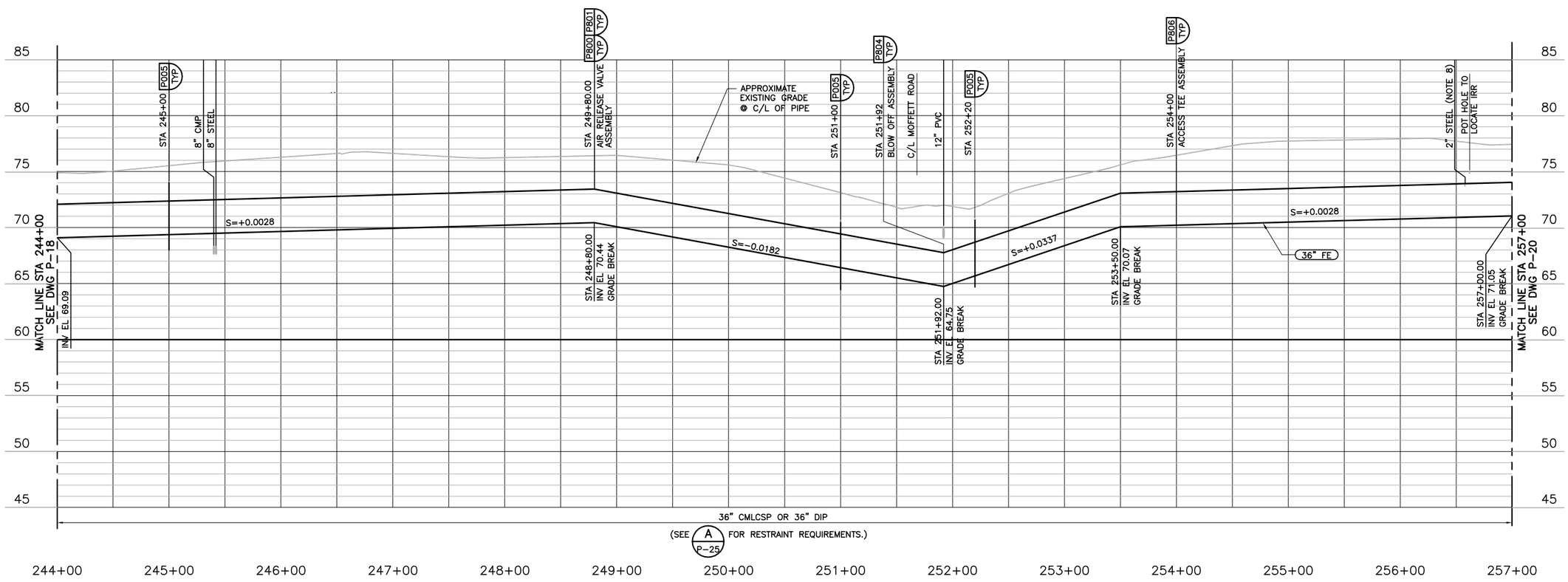

AVOID CUTTING UNDERGROUND UTILITY LINES. IT'S COSTLY.
Call before you Dig
1-800-227-2600
UNDERGROUND SERVICE (USA)

REV	DATE	BY	DESCRIPTION
			RECORD DRAWINGS

DESIGNED PIO
DRAWN PAT
CHECKED BEH
DATE MAY 2012

DISCIPLINE ENGINEER: ** ORIGINAL SEALED BY MICHAEL J. HARTLAUB 12/07/11 C74901 **
PROJECT ENGINEER: ** ORIGINAL SEALED BY DARREN G. BAUNE 12/07/11 C68899 **
VICE PRESIDENT: ** ORIGINAL SEALED BY MICHAEL J. BRITTEN 12/07/11 C27729 **

carollo

CITY OF TURLOCK INC. 1908
STANISLAUS COUNTY, CALIFORNIA

HARDING DRAIN BYPASS
PUMP STATION AND PIPELINE
CIVIL
PIPELINE PLAN & PROFILE
STATION 244+00 TO STATION 257+00

VERIFY SCALES
BAR IS ONE INCH ON ORIGINAL DRAWING
0 1"
IF NOT ONE INCH ON THIS SHEET, ADJUST SCALES ACCORDINGLY

JOB NO. 6918B.10
DRAWING NO. P-19
SHEET NO. 42 OF 107

Last Saved By: ALaico 8-25-14 05:10pm

FILENAME: C:\pw_working\projectwise\alaico\dms60458\RCp19001 8-25-14 05:11pm ALaico XREFS: plan; G-BDR; UTILITY; Turlock; outfallgrid; rcprf001; pipeline; ADDTOPO-OF; NEWTID; Mjb; BEH; Alignment; S-01S101; CA-MJB; CA-DGB; CA-MJH; CA-AEB; CA-GRS; CA-KAM; CA-ALM; CA-ALM_11-30-11; CA-DGB_11-30-11; CA-MJB_11-30-11; M-02M202 SADI0022; SADI0023; SADI0024; Turlock_City_LogoPMS_FNL;

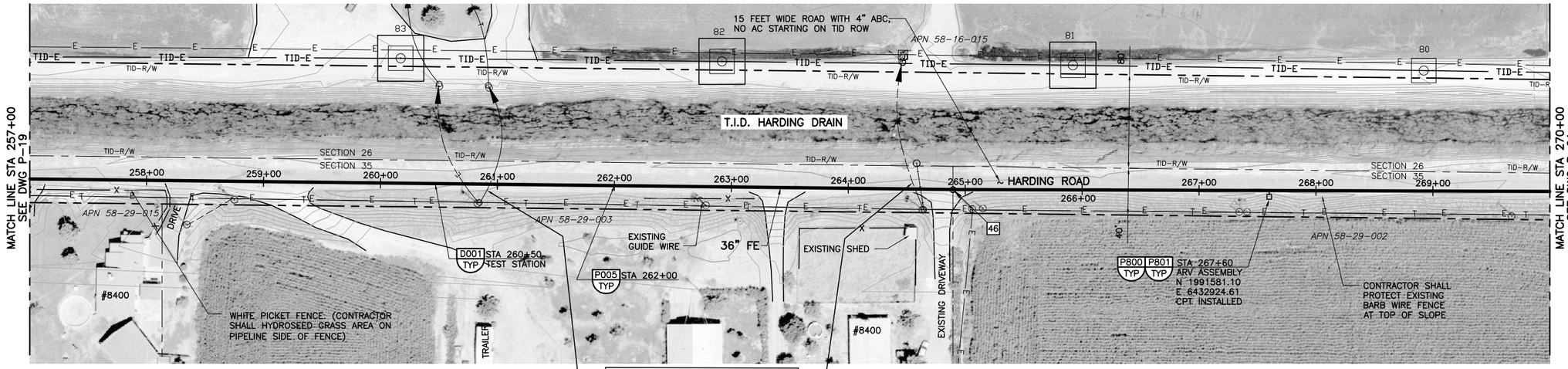

SCALES:
1" = 50' HORIZ
1" = 5' VERT

46 PI STA = 264+89.50
N = 1991587.32
E = 6432654.12
0.48° HORIZ BEND

LEGEND:

- TID-E — NEW POLES AND WIRES (TID=TURLOCK IRRIGATION DISTRICT).
- TE — TE — LOCAL OVERHEAD TELEPHONE AND ELECTRICAL LINES ON SAME POLES.
- E — E — OVERHEAD ELECTRIC LINES.
- TUG — UNDERGROUND TELEPHONE
- 115KV STEEL TOWERS AT ANGLE OR WOOD ON STRAIGHT ALIGNMENTS.
- TID EASEMENT AROUND POLE

NOTES:

1. ALL GENERAL NOTES SHOWN ON DRAWING G-2 APPLY TO THIS DRAWING.
2. CONTRACTOR SHALL TAKE CAUTION WHEN WORKING NEAR TURLOCK IRRIGATION DISTRICT'S (TID) 115KV POWER LINE. CONTRACTOR SHALL CONTACT TID PRIOR TO BEGINNING WORK TO DETERMINE ALL REQUIREMENTS FOR WORKING NEAR THE UTILITY. CONTRACTOR SHALL PROVIDE SAFETY TRAINING FOR ALL PERSONNEL OPERATING EQUIPMENT OR WORKING NEAR THE UTILITY.
3. TRENCH SHORING IS REQUIRED FOR 36" FE PIPE INSTALLATION FROM STATION 10+50.06 TO STATION 305+00. SEE SPECIFICATION 02260.
4. CONTRACTOR SHALL BOND ALL PIPE JOINTS AND FITTINGS (DUCTILE OR STEEL) PER CATHODIC PROTECTION TYPICAL DETAILS.
5. CONTRACTOR SHALL RESTRAIN ALL FITTINGS WITH DEFLECTION GREATER THAN 5 DEGREES PER DETAIL A ON DRAWING P-25.
6. FROM STATION 166+70 ON DRAWING P-13 TO STATION 304+25 ON DRAWING P-23 STANISLAUS COUNTY HAS PRESCRIPTIVE RIGHT OF WAY ONLY FOR HARDING ROAD.

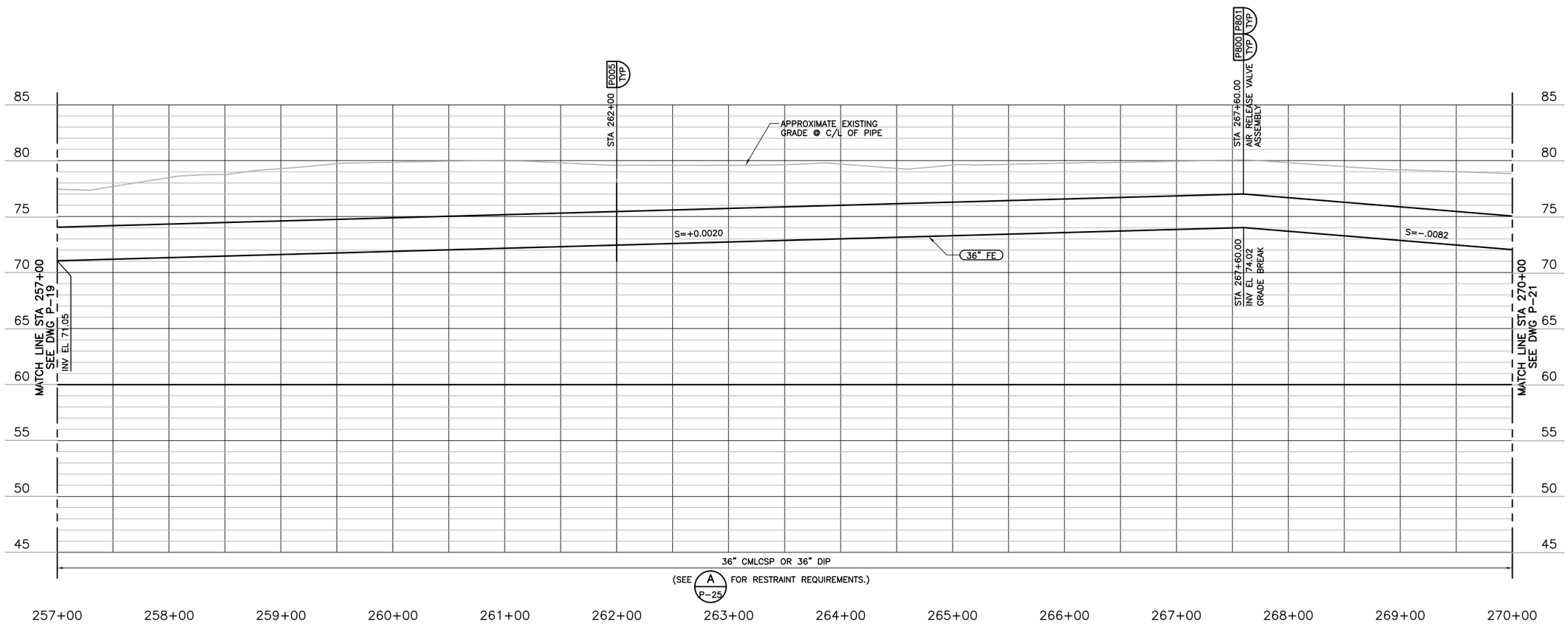

AVOID CUTTING UNDERGROUND UTILITY LINES. IT'S COSTLY.
Call before you Dig
1-800-227-2600
UNDERGROUND SERVICE (USA)

REV	DATE	BY	DESCRIPTION

RECORD DRAWINGS

DESIGNED PIO
DRAWN PAT
CHECKED BEH
DATE MAY 2012

DISCIPLINE ENGINEER: ** ORIGINAL SEALED BY MICHAEL J. HARTLAUB 12/07/11 C74901 **
PROJECT ENGINEER: ** ORIGINAL SEALED BY DARREN G. BAUNE 12/07/11 C68899 **
VICE PRESIDENT: ** ORIGINAL SEALED BY MICHAEL J. BRITTEN 12/07/11 C27729 **

carollo

CITY OF TURLOCK INC. 1908
STANISLAUS COUNTY, CALIFORNIA

HARDING DRAIN BYPASS
PUMP STATION AND PIPELINE
CIVIL
PIPELINE PLAN & PROFILE
STATION 257+00 TO STATION 270+00

VERIFY SCALES
BAR IS ONE INCH ON ORIGINAL DRAWING
0 1"
IF NOT ONE INCH ON THIS SHEET, ADJUST SCALES ACCORDINGLY

JOB NO. 6918B.10
DRAWING NO. P-20
SHEET NO. 43 OF 107

FILENAME: C:\pw_working\projectwise\alaico\dms60458\RCp20001 8-26-14 08:32am ALaico XREFS: plan; G-BDR; UTILITY; Turlock; rcprf001; pipeline; ADDTOPO-OF; NEWTID; Mjb; BEH; Alignment; S-01S101; CA-MJB; CA-DGB; CA-MJH; CA-AEB; CA-GRS; CA-KAM; CA-ALM; CA-ALM_11-30-11; CA-DGB_11-30-11; CA-MJB_11-30-11; M-02M202 SADI0024; SADI0025; Turlck_City_LogoPMS_FNL;

Last Saved By: ALaico 8-26-14 08:32am

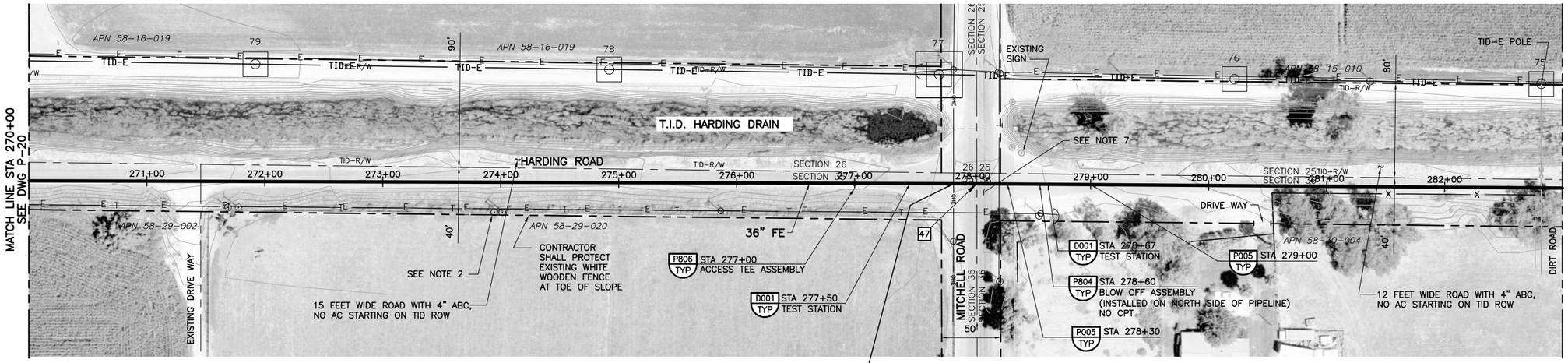

SCALES:
1" = 50' HORIZ
1" = 5' VERT

CAUTION:
LOW OVERHEAD LINES CROSSING

47 PI STA = 278+03.29
N = 1991583.41
E = 6433968.01
0.26' HORIZ DEF

LEGEND:

- TID-E — NEW POLES AND WIRES (TID=TURLOCK IRRIGATION DISTRICT).
- TE — TE — LOCAL OVERHEAD TELEPHONE AND ELECTRICAL LINES ON SAME POLES.
- E — E — OVERHEAD ELECTRIC LINES.
- TUG — UNDERGROUND TELEPHONE
- 115KV STEEL TOWERS AT ANGLE AND WOOD ON STRAIGHT ALIGNMENTS.
- TID EASEMENT AROUND POLE

NOTES:

1. ALL GENERAL NOTES SHOWN ON DRAWING G-2 APPLY TO THIS DRAWING.
2. CONTRACTOR SHALL TAKE CAUTION WHEN WORKING NEAR TURLOCK IRRIGATION DISTRICT'S (TID) 115KV POWER LINE. CONTRACTOR SHALL CONTACT TID PRIOR TO BEGINNING WORK TO DETERMINE ALL REQUIREMENTS FOR WORKING NEAR THE UTILITY. CONTRACTOR SHALL PROVIDE SAFETY TRAINING FOR ALL PERSONNEL OPERATING EQUIPMENT OR WORKING NEAR THE UTILITY.
3. TRENCH SHORING IS REQUIRED FOR 36" FE PIPE INSTALLATION FROM STATION 10+50.06 TO STATION 305+00. SEE SPECIFICATION 02260.
4. CONTRACTOR SHALL BOND ALL PIPE JOINTS AND FITTINGS (DUCTILE OR STEEL) PER CATHODIC PROTECTION TYPICAL DETAILS.
5. CONTRACTOR SHALL RESTRAIN ALL FITTINGS WITH DEFLECTION GREATER THAN 5 DEGREES PER DETAIL A ON DRAWING P-25.
6. FROM STATION 166+70 ON DRAWING P-13 TO STATION 304+25 ON DRAWING P-23 STANISLAUS COUNTY HAS PRESCRIPTIVE RIGHT OF WAY ONLY FOR HARDING ROAD.
7. CONTRACTOR SHALL INSTALL THE 36" FE WITHIN THE MITCHELL ROAD RIGHT OF WAY PER P003 TYP.

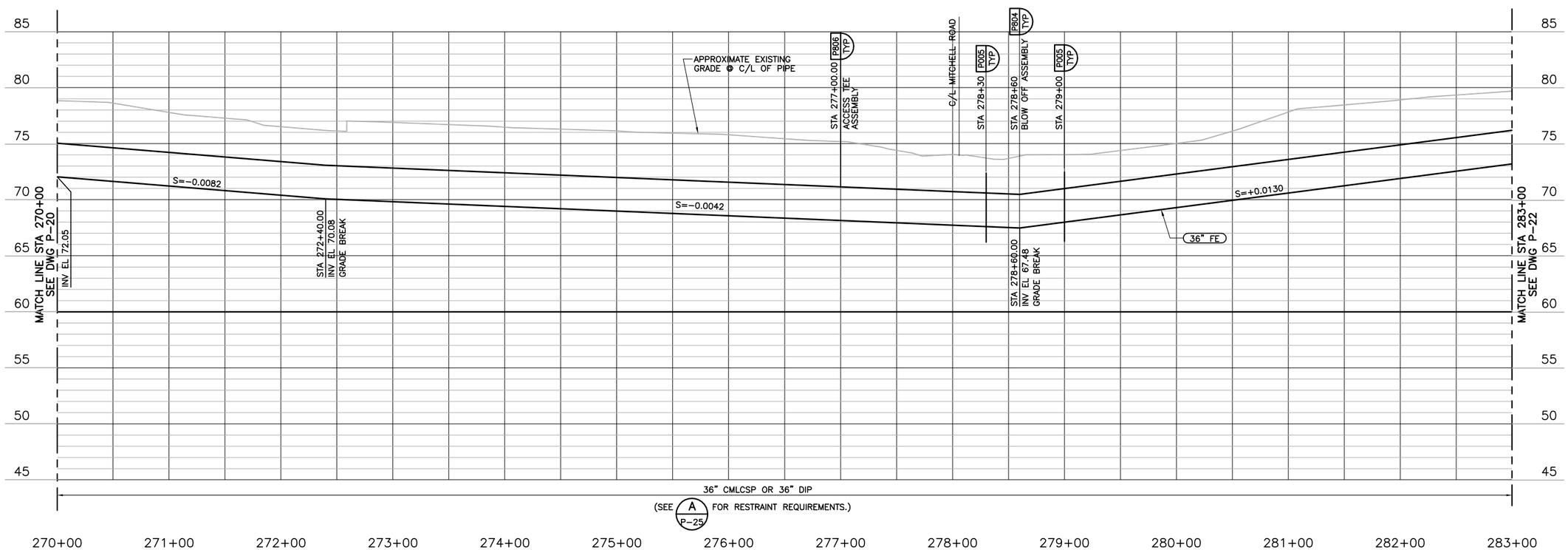

AVOID CUTTING UNDERGROUND UTILITY LINES. IT'S COSTLY.
Call before you Dig
1-800-227-2600
UNDERGROUND SERVICE (USA)

REV	DATE	BY	DESCRIPTION

RECORD DRAWINGS

DESIGNED PIO
DRAWN PAT
CHECKED BEH
DATE MAY 2012

DISCIPLINE ENGINEER: ** ORIGINAL SEALED BY MICHAEL J. HARTLAUB 12/07/11 C74901 **
PROJECT ENGINEER: ** ORIGINAL SEALED BY DARREN G. BAUNE 12/07/11 C68899 **
VICE PRESIDENT: ** ORIGINAL SEALED BY MICHAEL J. BRITTEN 12/07/11 C27729 **

carollo

CITY OF TURLOCK INC. 1908
STANISLAUS COUNTY, CALIFORNIA

HARDING DRAIN BYPASS
PUMP STATION AND PIPELINE
CIVIL
PIPELINE PLAN & PROFILE
STATION 270+00 TO STATION 283+00

VERIFY SCALES
BAR IS ONE INCH ON ORIGINAL DRAWING
0 1"
IF NOT ONE INCH ON THIS SHEET, ADJUST SCALES ACCORDINGLY

JOB NO. 6918B.10
DRAWING NO. P-21
SHEET NO. 44 OF 107

FILENAME: C:\pw_working\projectwise\alaico\dms60458\RCp21001 8-26-14 08:34am ALaico XREFS: plan; G-BDR; UTILITY; Turlock; rcprf001; pipeline; ADDTOPO-OF; NEWTID; Mjb; BEH; Alignment; S-01S101; CA-MJB; CA-DGB; CA-MJH; CA-AEB; CA-GRS; CA-KAM; CA-ALM; CA-ALM_11-30-11; CA-DGB_11-30-11; CA-MJB_11-30-11; M-02M202 SADI0025; SADI0026; Turlck_City_LogoPMS_FNL;

Last Saved By: ALaico 8-26-14 08:33am

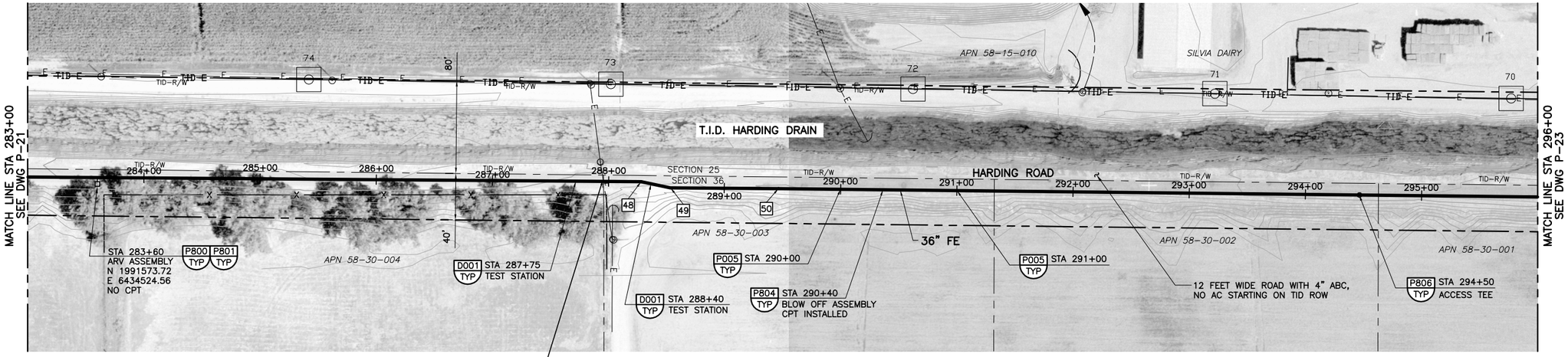

SCALES:
1" = 50' HORIZ
1" = 5' VERT

CAUTION:
LOW OVERHEAD POWERLINE CROSSING

48 PI STA = 288+27.95
N = 1991575.70
E = 6434992.54
11.25° HORIZ BEND

49 PI STA = 288+53.69
N = 1991570.49
E = 6435017.74
11.25° HORIZ BEND

50 PI STA = 289+46.73
N = 1991569.79
E = 6435110.78
0.20° HORIZ DEF

LEGEND:

— TID—E — NEW POLES AND WIRES (TID=TURLOCK IRRIGATION DISTRICT).

— TE — TE — LOCAL OVERHEAD TELEPHONE AND ELECTRICAL LINES ON SAME POLES.

— E — E — OVERHEAD ELECTRIC LINES.

— TUG —— UNDERGROUND TELEPHONE

115KV STEEL TOWERS AT ANGLE AND WOOD ON STRAIGHT ALIGNMENTS.
TID EASEMENT AROUND POLE

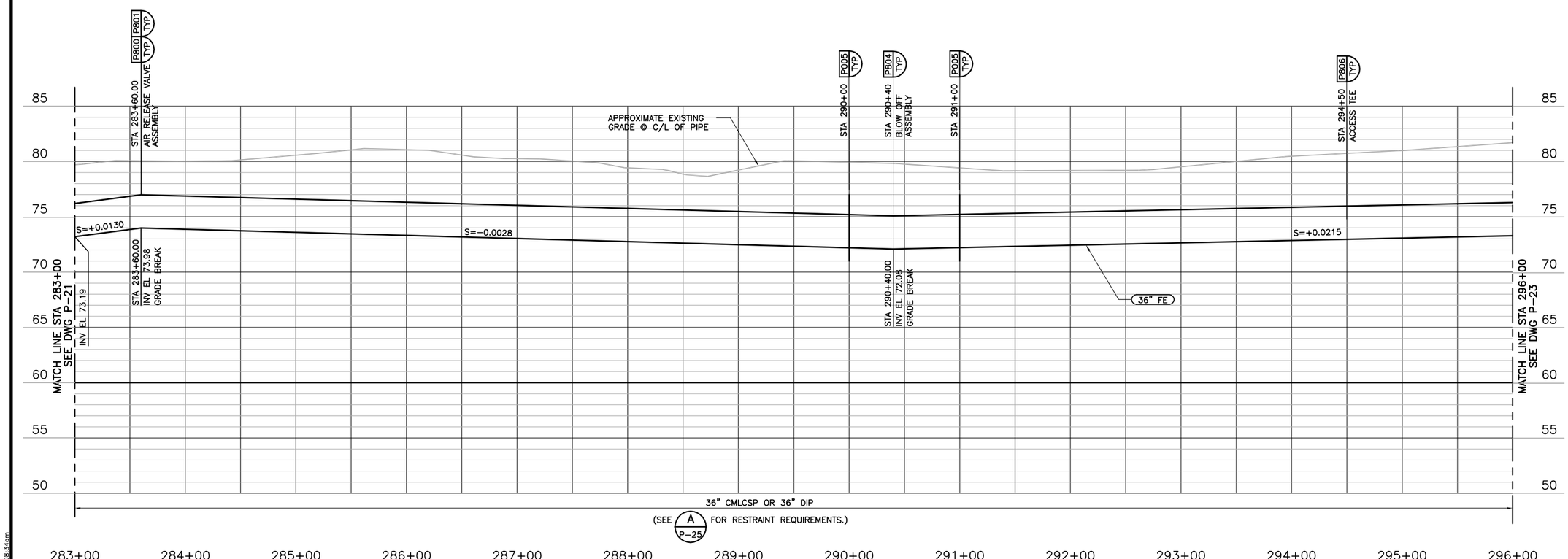

NOTES:

1. ALL GENERAL NOTES SHOWN ON DRAWING G-2 APPLY TO THIS DRAWING.
2. CONTRACTOR SHALL TAKE CAUTION WHEN WORKING NEAR TURLOCK IRRIGATION DISTRICT'S (TID) 115KV POWER LINE. CONTRACTOR SHALL CONTACT TID PRIOR TO BEGINNING WORK TO DETERMINE ALL REQUIREMENTS FOR WORKING NEAR THE UTILITY. CONTRACTOR SHALL PROVIDE SAFETY TRAINING FOR ALL PERSONNEL OPERATING EQUIPMENT OR WORKING NEAR THE UTILITY.
3. TRENCH SHORING IS REQUIRED FOR 36" FE PIPE INSTALLATION FROM STATION 10+50.06 TO STATION 305+00. SEE SPECIFICATION 02260.
4. CONTRACTOR SHALL BOND ALL PIPE JOINTS AND FITTINGS (DUCTILE OR STEEL) PER CATHODIC PROTECTION TYPICAL DETAILS.
5. CONTRACTOR SHALL RESTRAIN ALL FITTINGS WITH DEFLECTION GREATER THAN 5 DEGREES PER DETAIL A ON DRAWING P-25.
6. FROM STATION 166+70 ON DRAWING P-13 TO STATION 304+25 ON DRAWING P-23 STANISLAUS COUNTY HAS PRESCRIPTIVE RIGHT OF WAY ONLY FOR HARDING ROAD.

AVOID CUTTING UNDERGROUND UTILITY LINES. IT'S COSTLY.
Call before you Dig
1-800-227-2600
UNDERGROUND SERVICE (USA)

REV	DATE	BY	DESCRIPTION

RECORD DRAWINGS

DESIGNED PIO
DRAWN PAT
CHECKED BEH
DATE MAY 2012

DISCIPLINE ENGINEER: ** ORIGINAL SEALED BY MICHAEL J. HARTLAUB 12/07/11 C74901 **
PROJECT ENGINEER: ** ORIGINAL SEALED BY DARREN G. BAUNE 12/07/11 C68899 **
VICE PRESIDENT: ** ORIGINAL SEALED BY MICHAEL J. BRITTEN 12/07/11 C27729 **

carollo

CITY OF TURLOCK INC. 1908
STANISLAUS COUNTY, CALIFORNIA

HARDING DRAIN BYPASS
PUMP STATION AND PIPELINE
CIVIL
PIPELINE PLAN & PROFILE
STATION 283+00 TO STATION 296+00

VERIFY SCALES
BAR IS ONE INCH ON ORIGINAL DRAWING
0 1"
IF NOT ONE INCH ON THIS SHEET, ADJUST SCALES ACCORDINGLY

JOB NO. 6918B.10
DRAWING NO. P-22
SHEET NO. 45 OF 107

FILENAME: C:\pw_working\projectwise\alaico\dms60458\RCp22001 8-26-14 08:34am ALaico XREFS: plan; G-BDR; UTILITY; Turlock; outfallgrid; rcprf001; pipeline; ADDTOPO-OF; NEWTID; Mjb; BEH; Alignment; S-01S101; CA-MJB; CA-DGB; CA-MJH; CA-AEB; CA-GRS; CA-KAM; CA-ALM; CA-ALM_11-30-11; CA-DGB_11-30-11; CA-MJB_11-30-11; M-02M202 SADI0026; SADI0027; Turlck_City_LogoPMS_FNL;

Last Saved By: ALaico 8-26-14 08:34am

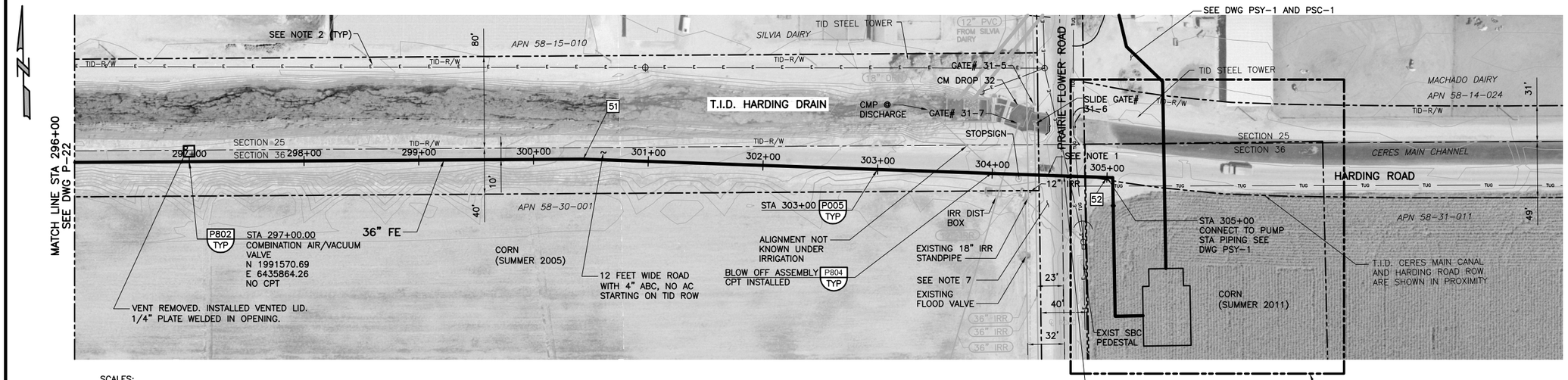

SCALES:
1" = 50' HORIZ
1" = 5' VERT

51 PI STA = 300+43.30
N = 1991557.78
E = 6436207.50
2.38° HORIZ BEND

52 EOP = 305+00
N = 1991533.81
E = 6436663.57

LEGEND:

- —TID—E— NEW POLES AND WIRES (TID=TURLOCK IRRIGATION DISTRICT).
- —TE—TE— LOCAL OVERHEAD TELEPHONE AND ELECTRICAL LINES ON SAME POLES.
- —E—E— OVERHEAD ELECTRIC LINES.
- —TUG— UNDERGROUND TELEPHONE
- 115KV STEEL TOWERS AT ANGLE AND WOOD ON STRAIGHT ALIGNMENTS.
- TID EASEMENT AROUND POLE

NOTES:

1. ALL GENERAL NOTES SHOWN ON DRAWING G-2 APPLY TO THIS DRAWING.
2. CONTRACTOR SHALL TAKE CAUTION WHEN WORKING NEAR TURLOCK IRRIGATION DISTRICT'S (TID) 115KV POWER LINE. CONTRACTOR SHALL CONTACT TID PRIOR TO BEGINNING WORK TO DETERMINE ALL REQUIREMENTS FOR WORKING NEAR THE UTILITY. CONTRACTOR SHALL PROVIDE SAFETY TRAINING FOR ALL PERSONNEL OPERATING EQUIPMENT OR WORKING NEAR THE UTILITY.
3. TRENCH SHORING IS REQUIRED FOR 36" FE PIPE INSTALLATION FROM STATION 10+50.06 TO STATION 305+00. SEE SPECIFICATION 02260.
4. CONTRACTOR SHALL BOND ALL PIPE JOINTS AND FITTINGS (DUCTILE OR STEEL) PER CATHODIC PROTECTION TYPICAL DETAILS.
5. CONTRACTOR SHALL RESTRAIN ALL FITTINGS WITH DEFLECTION GREATER THAN 5 DEGREES PER DETAIL A ON DRAWING P-25.
6. FROM STATION 166+70 ON DRAWING P-13 TO STATION 304+25 ON DRAWING P-23 STANISLAUS COUNTY HAS PRESCRIPTIVE RIGHT OF WAY ONLY FOR HARDING ROAD.
7. CONTRACTOR SHALL INSTALL THE 36" FE WITHIN PRAIRIE FLOWER ROAD RIGHT OF WAY PER P003 TYP.

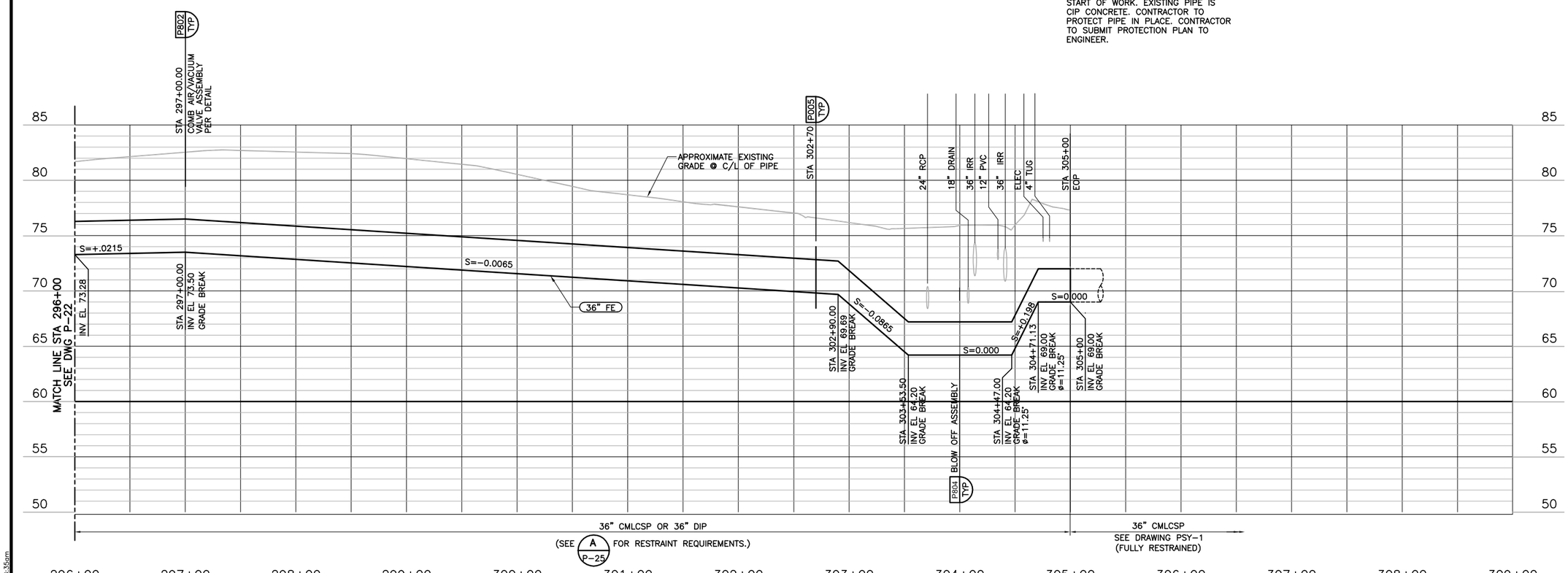

AVOID CUTTING UNDERGROUND UTILITY LINES. IT'S COSTLY.
Call before you Dig
1-800-227-2600
UNDERGROUND SERVICE (USA)

REV	DATE	BY	DESCRIPTION
			RECORD DRAWINGS

DESIGNED PIO
DRAWN PAT
CHECKED BEH
DATE MAY 2012

DISCIPLINE ENGINEER: ** ORIGINAL SEALED BY MICHAEL J. HARTLAUB 12/07/11 C74901 **
PROJECT ENGINEER: ** ORIGINAL SEALED BY DARREN G. BAUNE 12/07/11 C68899 **
VICE PRESIDENT: ** ORIGINAL SEALED BY MICHAEL J. BRITTEN 12/07/11 C27729 **

carollo

CITY OF TURLOCK INC. 1908
STANISLAUS COUNTY, CALIFORNIA

HARDING DRAIN BYPASS
PUMP STATION AND PIPELINE
CIVIL
PIPELINE PLAN & PROFILE
STATION 296+00 TO STATION 305+00

VERIFY SCALES
BAR IS ONE INCH ON ORIGINAL DRAWING
0 1"
IF NOT ONE INCH ON THIS SHEET, ADJUST SCALES ACCORDINGLY

JOB NO. 6918B.10
DRAWING NO. P-23
SHEET NO. 46 OF 107

FILENAME: C:\pw_working\projectwise\alaico\dms60458\RCp23001 8-26-14 08:35am ALaico XREFS: plan; G-BDR; UTILITY; Turlock; rcprf001; pipeline; ADDTOPO-OF; NEWTID; Mjb; BEH; Alignment; S-01S101; CA-MJB; CA-DGB; CA-MJH; CA-AEB; CA-GRS; CA-KAM; CA-ALM; CA-ALM_11-30-11; CA-DGB_11-30-11; CA-MJB_11-30-11; M-02M202 SADI0027; SADI0028; Turlck_City_LogoPMS_FNL;

Last Saved By: ALaico 8-26-14 08:35am

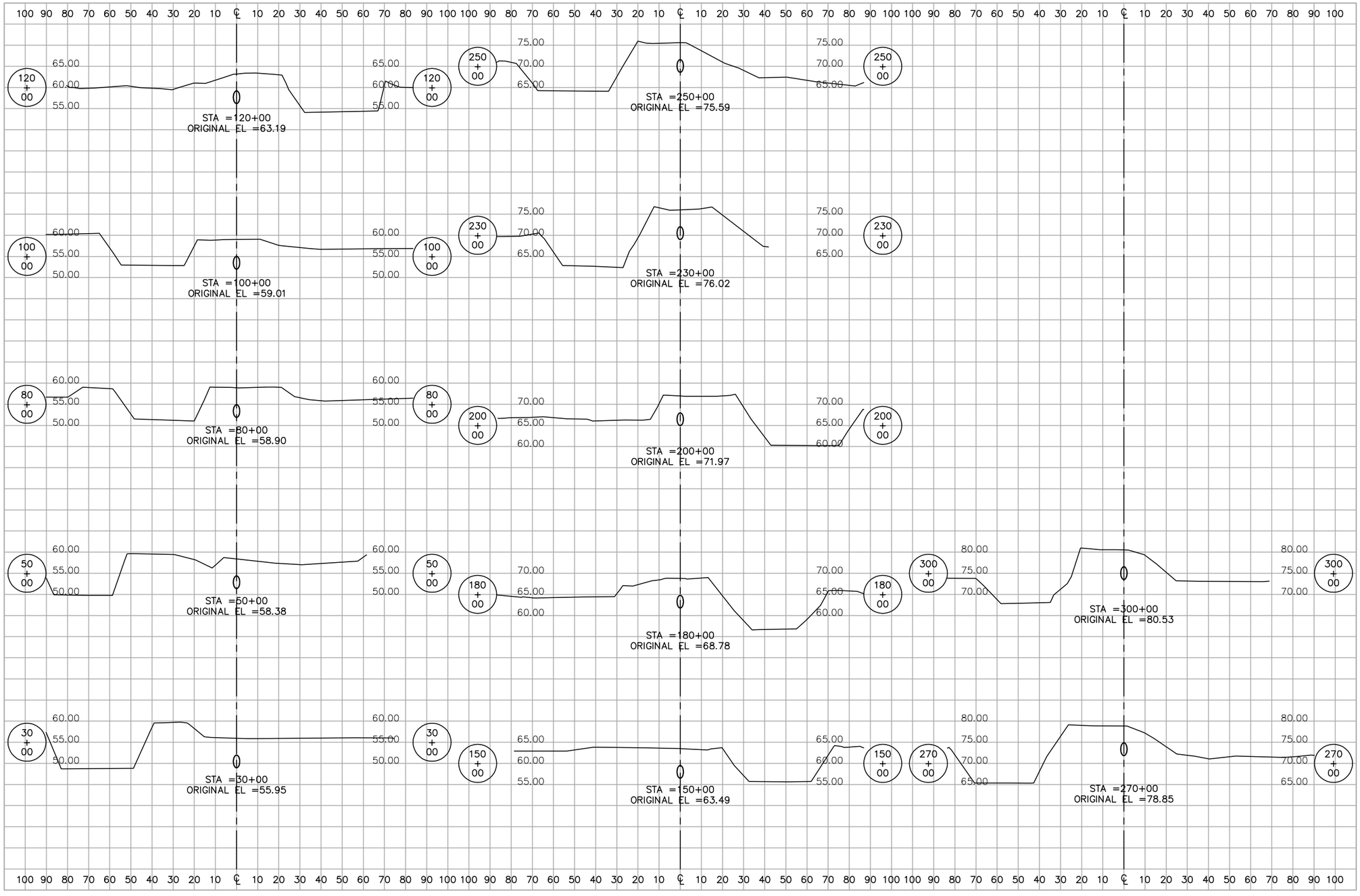

NOTES:

1. PURPOSE OF DRAWING IS TO SHOW LOCATION OF PIPELINE IN RELATION TO HARDING ROAD AND TID LATERAL NO 5. REFER TO PLAN AND PROFILE DRAWINGS FOR DETAILS NOT SHOWN.
2. PIPE ENDS SHOWN FOR CENTERLINE LOCATION ONLY. SEE PLAN AND PROFILE DRAWINGS FOR DEPTH OF COVER AT EACH SECTION.
3. CONTRACTOR TO CONSTRUCT PROJECT WITHIN ROW AND EASEMENTS AS SHOWN ON PLAN AND PROFILE DRAWINGS.

SCALE:
1" = 50' HORIZ
1" = 5' VERT

AVOID CUTTING UNDERGROUND UTILITY LINES. IT'S COSTLY.
Call before you Dig
1-800-227-2600
UNDERGROUND SERVICE (USA)

REV	DATE	BY	DESCRIPTION

RECORD DRAWINGS

DESIGNED PIO
DRAWN PAT
CHECKED BEH
DATE MAY 2012

DISCIPLINE ENGINEER: ** ORIGINAL SEALED BY MICHAEL J. HARTLAUB 12/07/11 C74901 **
PROJECT ENGINEER: ** ORIGINAL SEALED BY DARREN G. BAUNE 12/07/11 C68899 **
VICE PRESIDENT: ** ORIGINAL SEALED BY MICHAEL J. BRITTEN 12/07/11 C27729 **

carollo

CITY OF TURLOCK INC. 1908
STANISLAUS COUNTY, CALIFORNIA

HARDING DRAIN BYPASS
PUMP STATION AND PIPELINE
CIVIL
OUTFALL PIPELINE
LEVEE CROSS SECTIONS

VERIFY SCALES
BAR IS ONE INCH ON ORIGINAL DRAWING
0 1"
IF NOT ONE INCH ON THIS SHEET, ADJUST SCALES ACCORDINGLY

JOB NO. 6918B.10
DRAWING NO. P-24
SHEET NO. 47 OF 107

Last Saved By: dthung 5-14-12 11:18am

FILENAME: C:\pw_working\projectwise\alaico\dms60458\RCp24001 8-26-14 08:36am ALaico XREFS: G-BDR; CA-AEB; CA-GRS; CA-KAM; Mjb; BEH; CA-MJB; CA-DGB; CA-MJH; CA-ALM; CA-ALM_11-30-11; CA-DGB_11-30-11; CA-MJB_11-30-11 Turlck_City_LogoPMS_FNL;

HORIZ BEND ANGLE	STEEL PIPE FULLY RESTRAINTED LENGTH 'L' (FT)	STEEL PIPE–MINIMUM LENGTH OF DOUBLE WELDING REQUIRED DIRECTLY UPSTREAM AND DOWNSTREAM OF EACH RESTRAINED JOINT (FT)	DUCTILE IRON FULLY RESTRAINTED LENGTH 'L' (FT)
LESS THAN 5°	–	–	–
5° – 25°	69	14	23
26° – 45°	122	25	44
46° – 70°	210	42	74
71° – 90°	319	64	105
DEAD ENDS, VALVES, TEES & WYES	319	64	105

HORIZ BEND ANGLE	STEEL PIPE FULLY RESTRAINTED LENGTH 'L' (FT)	STEEL PIPE–MINIMUM LENGTH OF DOUBLE WELDING REQUIRED DIRECTLY UPSTREAM AND DOWNSTREAM OF EACH RESTRAINED JOINT (FT)	DUCTILE IRON FULLY RESTRAINTED LENGTH 'L' (FT)
LESS THAN 5°	–	–	–
5° – 25°	119	24	23
26° – 45°	211	42	44
46° – 70°	362	73	74
71° – 90°	551	111	105

HORIZ BEND ANGLE	STEEL PIPE FULLY RESTRAINTED LENGTH 'L' (FT)	STEEL PIPE–MINIMUM LENGTH OF DOUBLE WELDING REQUIRED DIRECTLY UPSTREAM AND DOWNSTREAM OF EACH RESTRAINED JOINT (FT)	DUCTILE IRON FULLY RESTRAINTED LENGTH 'L' (FT)
LESS THAN 5°	–	–	–
5° – 25°	119	24	68
26° – 45°	211	42	127
46° – 70°	362	73	215
71° – 90°	551	111	308

NOTES:

1. THE 36" PIPELINE RESTRAINT IS DESIGNED TO A MAXIMUM PRESSURE OF 150 PSI. DO NOT PRESSURIZE PIPELINE TO GREATER THAN 150 PSI.
2. LENGTHS SHALL APPLY EACH WAY FROM HORIZONTAL OR VERTICAL BEND OR VALVE. FOR A TEE OR WYE, THE RESTRAINED LENGTH SHALL APPLY ALONG THE BRANCH OF THE FITTING, ALSO RESTRAIN ONE STANDARD JOINT LENGTH OF PIPE EACH WAY ALONG THE RUN SIDE OF THE TEE OR WYE.
3. EXTEND ALL LENGTHS TO THE NEXT PIPE JOINT PAST REQUIRED LENGTH.
4. THE LENGTH OF CARRIER PIPE WITHIN THE CASING PIPE WILL NOT BE CONSIDERED AS PART OF THE REQUIRED RESTRAINED LENGTH.
5. STEEL PIPE RESTRAINED JOINTS SHALL BE WELDED PER SPEC 15252C. DIP RESTRAINED JOINTS SHALL BE PER SPEC 15251.
6. ALL CLOSURE PIECES SHALL BE RESTRAINED PIPE.
7. DOUBLE WELDING (WELDING OF THE INTERIOR AND EXTERIOR OF THE PIPING JOINT) WILL BE REQUIRED ON EACH SIDE OF RESTRAINED STEEL PIPING JOINTS. LENGTH AND LOCATIONS OF DOUBLE WELDING TO BE CALCULATED AND DETERMINED BY THE CONTRACTOR AND SUBMITTED TO THE ENGINEER FOR REVIEW AND APPROVAL.

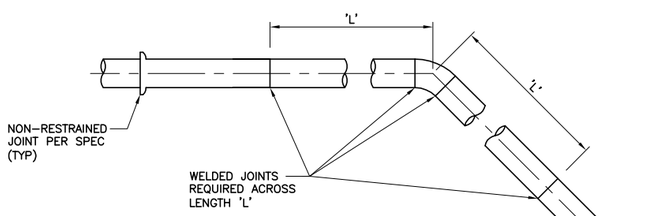

STEEL PIPE DETAIL

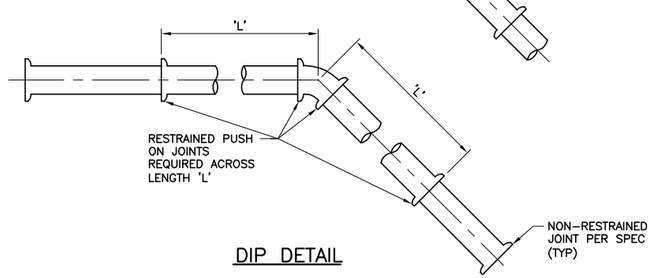

DIP DETAIL

A – DETAIL – PIPE RESTRAINT REQUIREMENTS

SCALE: NTS
FILE: M–01M403/404

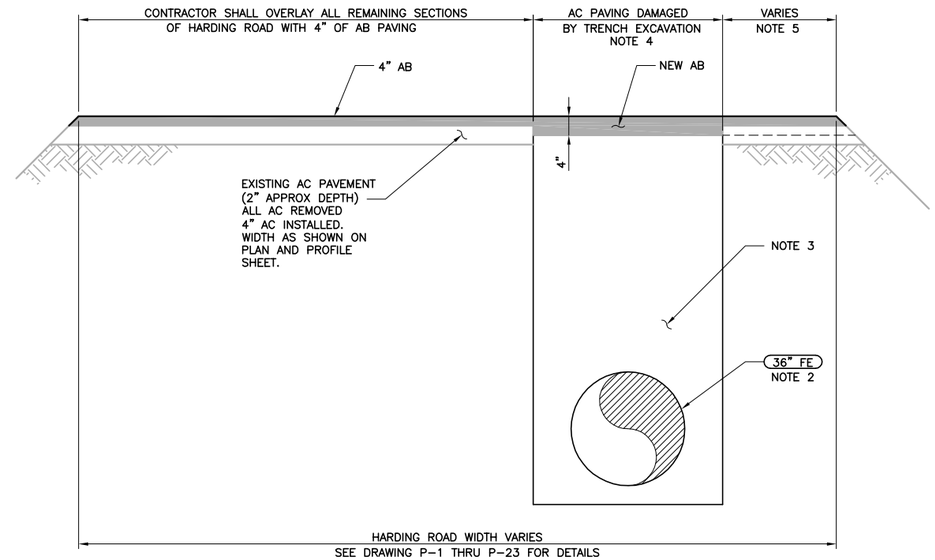

NOTES:

1. THIS DETAIL APPLIES TO THE SECTION OF PIPELINE BETWEEN CROWS LANDING AND PRAIRIE FLOWER ROAD (APPROXIMATE) FROM STA 105+00 – 304+50.
2. HORIZONTAL AND VERTICAL LOCATION OF THE 36" FE PIPE VARIES WITHIN HARDING ROAD. SEE DWGS P–1 THRU P–23 FOR EXACT LOCATION.
3. SEE P002 TYP FOR TRENCHING AND BACKFILL REQUIREMENTS UNLESS CALLED OUT AS P003 TYP .
4. CONTRACTOR SHALL REPLACE EXISTING AC PAVING WITHIN THE TRENCH ZONE WITH 4" AB.
5. IF THE LIMITS OF THE TRENCH ARE WITHIN 3 FEET OF THE EXISTING EDGE OF ASPHALT (ON EITHER SIDE OF HARDING ROAD), THE CONTRACTOR SHALL REPLACE THE AC PAVING WITHIN THE TRENCH ZONE AND THE AC PAVING EXTENDED TO THE EDGE OF ROAD WITH 4" OF ABC.
7. HARDING ROAD FROM APPROXIMATE STATION 65+00 THRU 104+90 OF THE 36" FE PIPELINE HAS CRUSHED STONE SURFACE. AGGREGATE BASE COARSE SHALL BE REPLACED TO EXISTING CONDITION AFTER PIPELINE INSTALLATION AND SUCCESSFUL PRESSURE TESTING. SEE DRAWINGS P–5 THRU P–8 FOR MORE INFORMATION.

B – DETAIL – HARDING ROAD REPAIR REQUIREMENTS

SCALE: NTS
FILE: RCP25001

Last Saved By: ALaico 6–24–14 09:45am

REV	DATE	BY	DESCRIPTION
			RECORD DRAWINGS

DESIGNED DGB
DRAWN AL
CHECKED CFS
DATE MAY 2012

DISCIPLINE ENGINEER: ** ORIGINAL SEALED BY MICHAEL J. HARTLAUB 12/07/11 C74901 **
PROJECT ENGINEER: ** ORIGINAL SEALED BY DARREN G. BAUNE 12/07/11 C68899 **
VICE PRESIDENT: ** ORIGINAL SEALED BY MICHAEL J. BRITTEN 12/07/11 C27729 **

carollo

CITY OF TURLOCK INC. 1908
STANISLAUS COUNTY, CALIFORNIA

HARDING DRAIN BYPASS
PUMP STATION AND PIPELINE
CIVIL
MISCELLANEOUS DETAILS

VERIFY SCALES
BAR IS ONE INCH ON ORIGINAL DRAWING
0 1"
IF NOT ONE INCH ON THIS SHEET, ADJUST SCALES ACCORDINGLY

JOB NO. 6918B.10
DRAWING NO. P–25
SHEET NO. 48 OF 107

FILENAME: C:\pw_working\projectwise\alaico\dms60458\RCp25001 8–26–14 08:36am ALaico XREFS: G–BDR; Mjb; BEH; CA–MJB; CA–DGB; CA–MJH; CA–AEB; CA–GRS; CA–KAM; M–01M403; M–01M404; CA–ALM; CA–ALM_11–30–11; CA–DGB_11–30–11; CA–MJB_11–30–11 Turlck_City_LogoPMS_FNL; Untitled–1; Untitled–1;

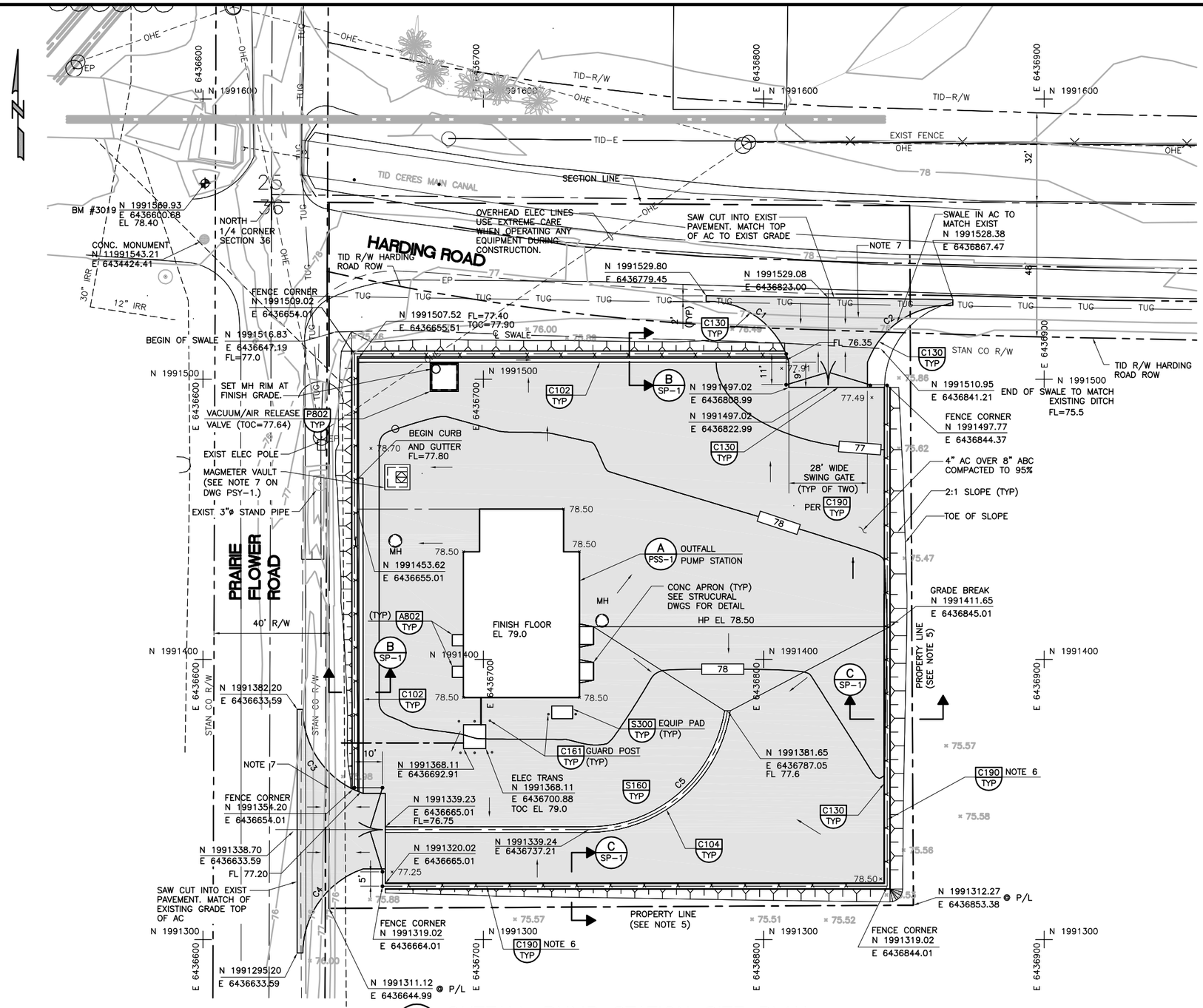

A OUTFALL PUMP STATION SITE PLAN

SCALE: 1" = 20'
FILE: PS Site

LEGEND

- CONCRETE
- AC PAVING
- SWALE
- EDGE OF BERM/RIDGE
- NEW ELEC. CONDUITS
- GRADE BREAK
- × 77.03 SPOT ELEVATIONS OF NEW GRADE
- × 75.57 EXISTING SPOT ELEVATIONS
- SLOPE FROM NEW GRADE TO EXISTING

CURVE DATA				
CURVE NO.	DELTA ANGLE	TANGENT	RADIUS	ARC LENGTH
C1	75°22'53"	23.20	30.02	39.50
C2	71°49'08"	22.62	31.24	39.16
C3	71°01'25"	22.64	31.73	39.33
C4	71°01'35"	22.64	31.73	39.33
C5	89°59'18"	49.99	50.00	78.53

NOTES:

1. CONTACT USA (1-800-227-2600) PRIOR TO BEGINNING ANY WORK IN ORDER TO IDENTIFY UTILITIES IN THE WORK AREA WHICH MAY NOT BE SHOWN ON DWGS.
2. REFER TO SHEET RDY-1 FOR SURROUNDING AREA.
3. MATCH DRIVEWAY TOC TO CURB AND GUTTER FLL ELEVATION.
4. SEE DWG G-4 FOR SURVEY CONTROL INFORMATION.
5. NO WORK SHALL BE CONDUCTED OUTSIDE THE PROPERTY BOUNDARY.
6. 7' TALL CHAIN LINK FENCE WITH BARBED WIRE. SEE SPECIFICATION 02820.
7. MATCH AC TO EXISTING DITCH FLOW LINE ELEVATION.
8. CONTRACTOR SHALL INSTALL CONTRACTOR'S TRAILER AND ENGINEER'S CONSTRUCTION TRAILER ON OUTFALL PUMP STATION SITE. SUBMIT LOCATION TO ENGINEER PRIOR TO CONSTRUCTION FOR REVIEW AND APPROVAL.

AVOID CUTTING UNDERGROUND UTILITY LINES. IT'S COSTLY.
Call before you Dig
1-800-227-2600
UNDERGROUND SERVICE (USA)

RECORD DRAWINGS

REV	DATE	BY	DESCRIPTION

DESIGNED RH
DRAWN JCI
CHECKED WCL
DATE MAY 2012

DISCIPLINE ENGINEER: ** ORIGINAL SEALED BY MICHAEL J. HARTLAUB 12/07/11 C74901 **
PROJECT ENGINEER: ** ORIGINAL SEALED BY DARREN G. BAUNE 12/07/11 C68899 **
VICE PRESIDENT: ** ORIGINAL SEALED BY MICHAEL J. BRITTEN 12/07/11 C27729 **

carollo

CITY OF TURLOCK INC. 1908
STANISLAUS COUNTY, CALIFORNIA

HARDING DRAIN BYPASS
PUMP STATION AND PIPELINE
CIVIL
OUTFALL PUMP STATION
SITE PLAN PAVING AND GRADING

VERIFY SCALES
BAR IS ONE INCH ON ORIGINAL DRAWING
0 1"
IF NOT ONE INCH ON THIS SHEET, ADJUST SCALES ACCORDINGLY

JOB NO. 6918B.10
DRAWING NO. PSC-1
SHEET NO. 49 OF 107

FILENAME: C:\pw_working\projectwise\alaico\dms60458\C-01C001 8-26-14 08:37am ALaico XREFS: PS site; G-BDR; PSetopo; Mjb; BEH; CA-MJB; CA-DGB; CA-MJH; CA-AEB; CA-GRS; CA-KAM; PS site Patt; CA-ALM; CA-ALM_11-30-11; CA-DGB_11-30-11; CA-MJB_11-30-11 Turlck_City_LogoPMS_FNL;

Last Saved By: ALaico 5-28-14 04:59pm

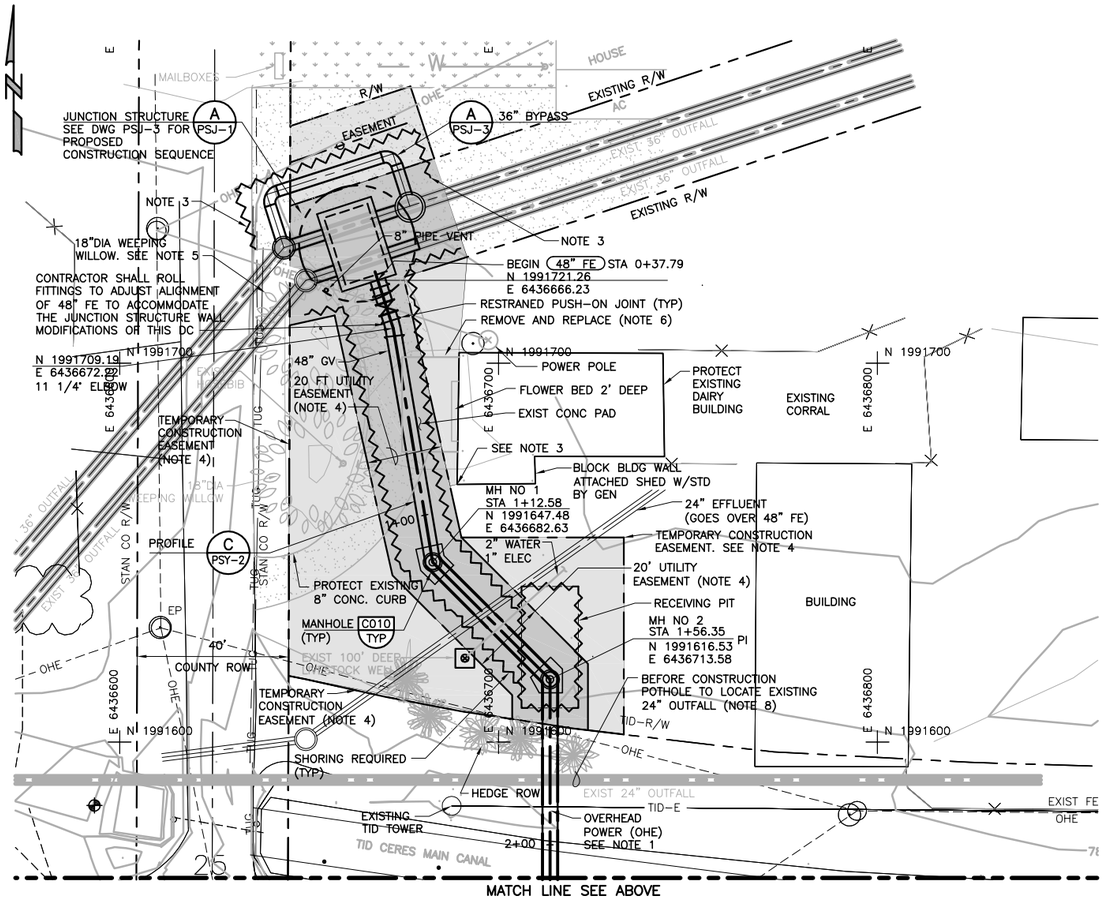

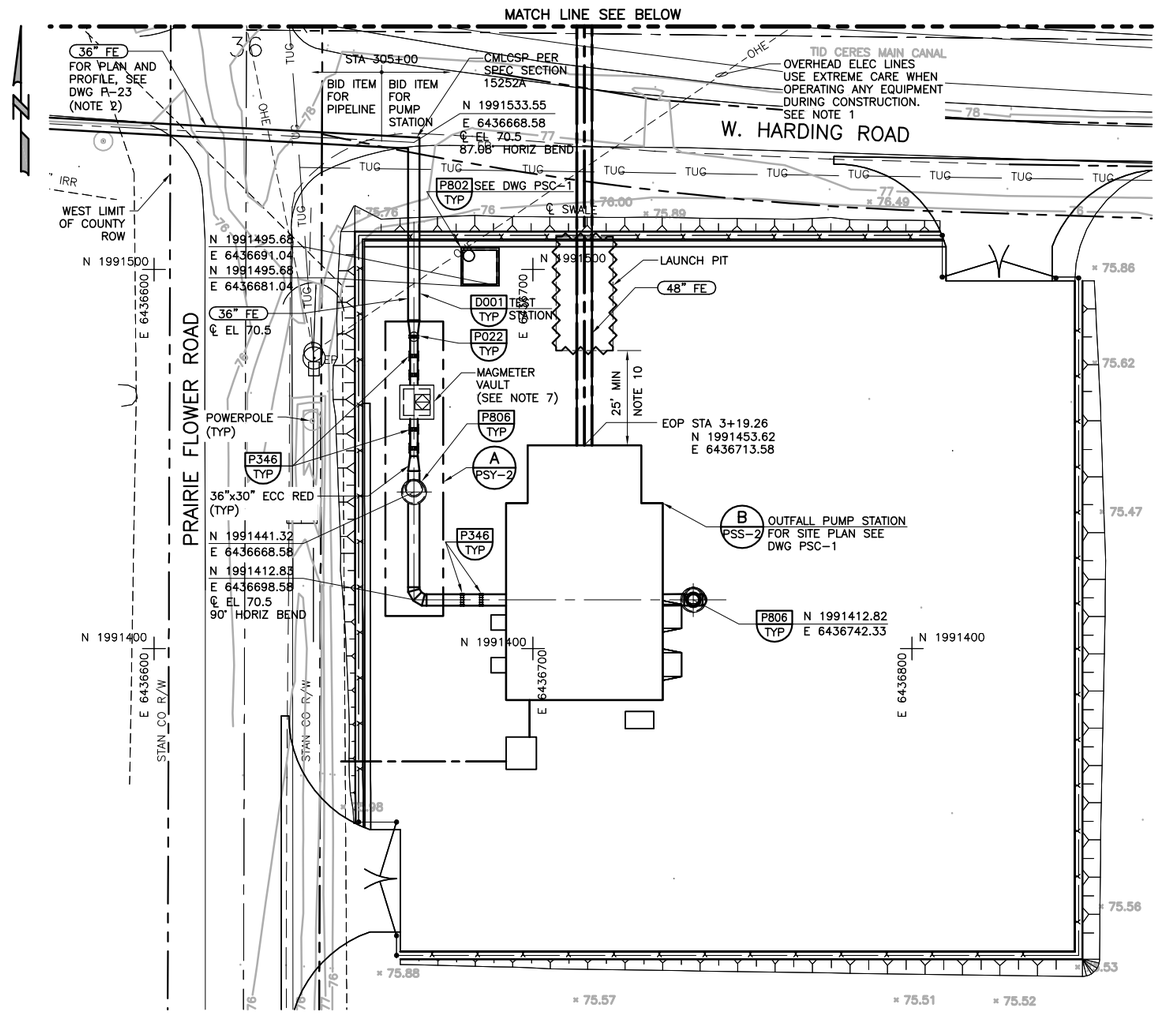

A PIPING PLAN
SCALE: 1" = 20'
FILE: JUNCTION_SITE

LEGEND:

- PERMANENT UTILITY EASEMENT
- TEMPORARY EASEMENT
- SHORING REQUIRED

NOTES:

1) CONTRACTOR SHALL TAKE CAUTION WHEN WORKING NEAR TURLOCK IRRIGATION DISTRICT'S (TID) 115KV POWER LINES. CONTRACTOR SHALL CONTACT T.I.D. PRIOR TO BEGINNING WORK TO DETERMINE ALL REQUIREMENTS FOR WORKING NEAR THE UTILITY. CONTRACTOR SHALL PROVIDE SAFETY TRAINING FOR ALL PERSONNEL OPERATING EQUIPMENT OR WORKING NEAR THE UTILITY.

2) CONTRACTOR SHALL BOND ALL PIPE JOINTS AND FITTINGS (DUCTILE OR STEEL) TO PROVIDE ELECTRICAL CONTINUITY ALONG PIPELINE.

3) CONTRACTOR SHALL INSTALL SHORING TO PROTECT FOUNDATION OF EXISTING SLAB ON GRADE DAIRY BUILDING AND LIVESTOCK WELL PER SPECIFICATION 02260. SUBMIT STAMPED DESIGN CALCULATIONS AND DRAWINGS PER SPECIFICATION SECTION 02260. CONTRACTOR SHALL INSTALL FOUR (4) CONTROL POINTS PER SPEC 02260.

4) CONTRACTOR SHALL STAKE EASEMENTS BASED ON PLATS PROVIDED BY OWNER.

5) PROTECT EXISTING 18" WEEPING WILLOW TREES DURING CONSTRUCTION.

6) CONTRACTOR SHALL REPLACE EXISTING CONCRETE PAD W/ PAD OF EQUAL OR GREATER SIZE. COORDINATE LOCATION AND TIMING OF INSTALLATION W/ DAIRY OWNER. SEE S160 TYP FOR SLAB DESIGN.

7) MAGMETER VAULT SHALL BE PRECAST CONCRETE WITH BOTTOM SLAB WITH SUMP, ALL COMPONENTS SHALL BE DESIGNED FOR H20 TRAFFIC LOADS. SUBMIT DESIGN FOR REVIEW BY ENGINEER PRIOR TO CONSTRUCTION.

8) CONTRACTOR SHALL POTHOLE AND FIELD VERIFY LOCATION AND ELEVATION PRIOR TO COMMENCING WORK. SUBMIT ALL INFORMATION TO THE ENGINEER.

9) CONTRACTOR SHALL INSTALL FULLY RESTRAINED WELDED STEEL PIPE FROM STA 305+00 TO PUMP STATION.

10) THE PUMP STATION MAY BE INSTALLED PRIOR TO THE MICRO-TUNNEL. REFER TO SPEC 1140 FOR WORK RESTRICTIONS.

AVOID CUTTING UNDERGROUND UTILITY LINES. IT'S COSTLY.
Call before you Dig
1-800-227-2600
UNDERGROUND SERVICE (USA)

REV	DATE	BY	DESCRIPTION
			RECORD DRAWINGS

DESIGNED BA
DRAWN JCI
CHECKED WCL
DATE MAY 2012

DISCIPLINE ENGINEER: ** ORIGINAL SEALED BY MICHAEL J. HARTLAUB 12/07/11 C74901 **
PROJECT ENGINEER: ** ORIGINAL SEALED BY DARREN G. BAUNE 12/07/11 C68899 **
VICE PRESIDENT: ** ORIGINAL SEALED BY MICHAEL J. BRITTEN 12/07/11 C27729 **

carollo

CITY OF TURLOCK INC. 1908
STANISLAUS COUNTY, CALIFORNIA

HARDING DRAIN BYPASS
PUMP STATION AND PIPELINE
CIVIL
OUTFALL PUMP STATION/JUNCTION STRUCTURE PIPING PLAN AND PROFILE

VERIFY SCALES
BAR IS ONE INCH ON ORIGINAL DRAWING
0 1"
IF NOT ONE INCH ON THIS SHEET, ADJUST SCALES ACCORDINGLY

JOB NO. 6918B.10
DRAWING NO. PSY-1
SHEET NO. 50 OF 107

FILENAME: C:\pw_working\projectwise\alaico\dms60458\Y-01Y001 8-26-14 08:38am ALaico XREFS: PS site; G-BDR; JUNCTION_SITE; PSetopo; Mjb; BEH; CA-MJB; CA-DGB; CA-MJH; CA-AEB; CA-GRS; CA-KAM; CA-ALM_11-30-11; CA-DGB_11-30-11; CA-MJB_11-30-11; CA-ALM Turlck_City_LogoPMS_FNL;

Last Saved By: ALaico 6-24-14 09:50am

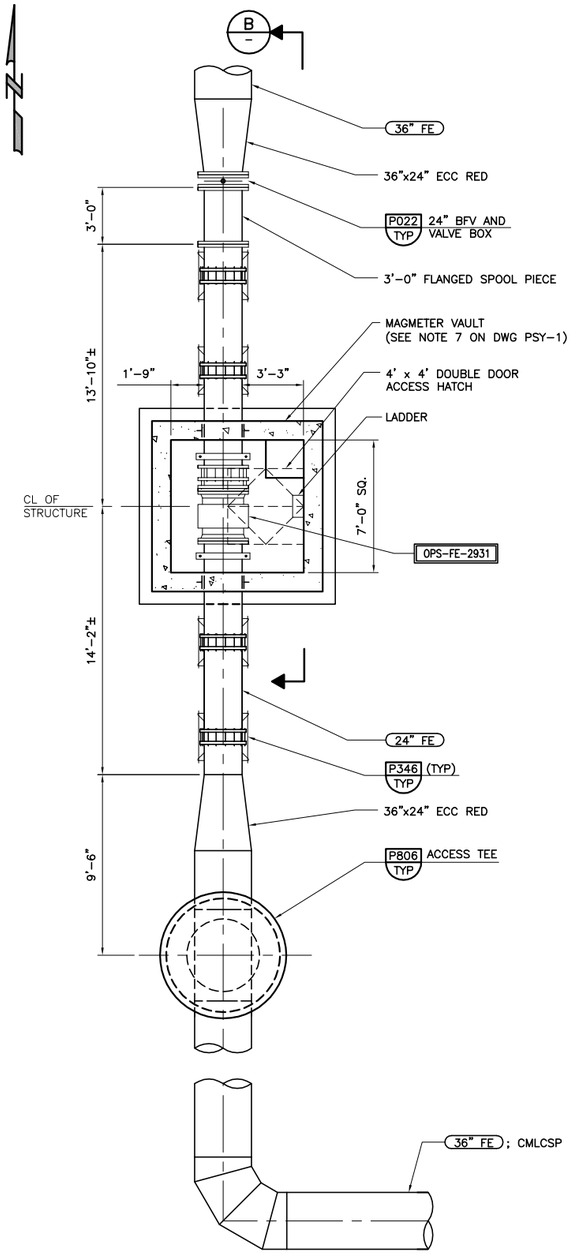

A PSY-1 PLAN
SCALE: 1/4" = 1'-0"
FILE: M-01M100

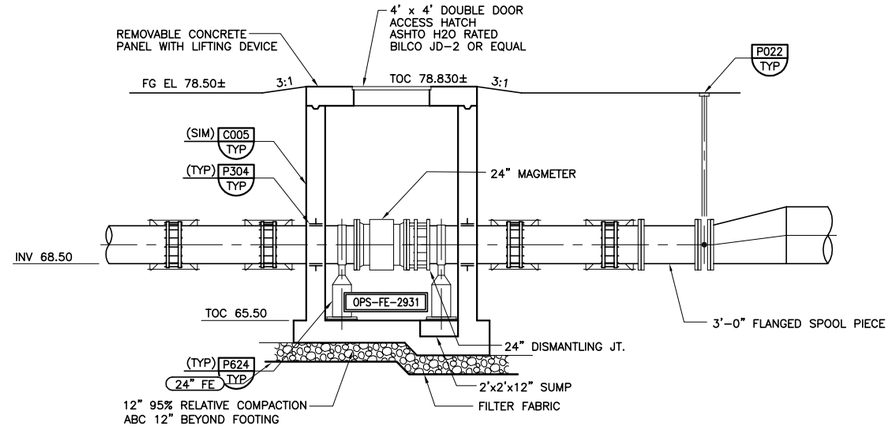

B SECTION
SCALE: 1/4" = 1'-0"
FILE: M-01M100

NOTE:

1. REFER TO ALL NOTES ON DRAWING PSY-1.

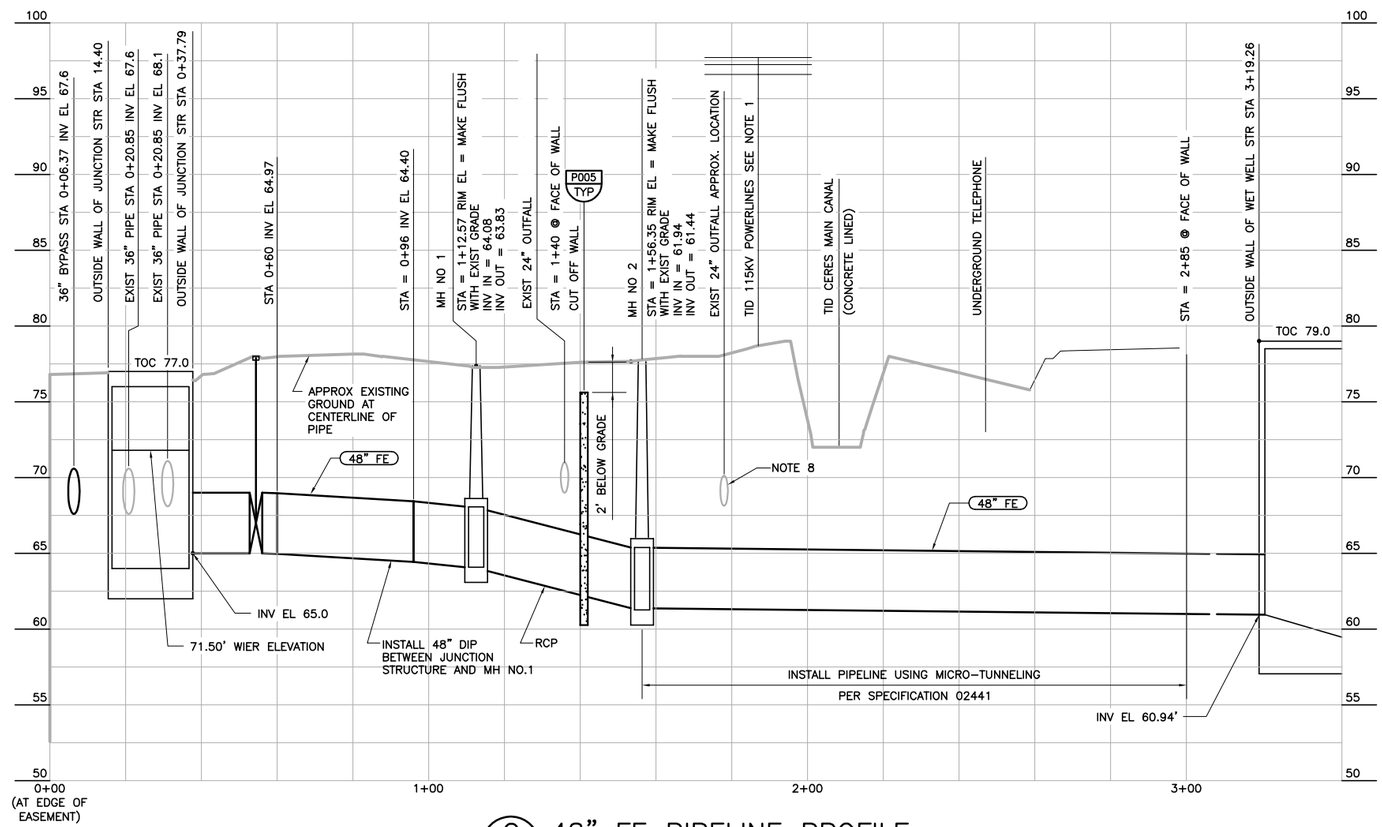

C PSY-1 48" FE PIPELINE PROFILE
SCALE: HORIZ 1" = 20' VERT 1' = 5'
FILE: RCPRF048

REV	DATE	BY	DESCRIPTION

RECORD DRAWINGS

DESIGNED FHF/JCI
DRAWN JCI
CHECKED DT
DATE MAY 2012

DISCIPLINE ENGINEER: ** ORIGINAL SEALED BY MICHAEL J. HARTLAUB 12/07/11 C74901 **

PROJECT ENGINEER: ** ORIGINAL SEALED BY DARREN G. BAUNE 12/07/11 C68899 **

VICE PRESIDENT: ** ORIGINAL SEALED BY MICHAEL J. BRITTEN 12/07/11 C27729 **

carollo

CITY OF TURLOCK INC. 1908
STANISLAUS COUNTY, CALIFORNIA

HARDING DRAIN BYPASS
PUMP STATION AND PIPELINE
CIVIL
OUTFALL PUMP STATION/JUNCTION STRUCTURE PLAN AND SECTION

VERIFY SCALES
BAR IS ONE INCH ON ORIGINAL DRAWING
0 1"
IF NOT ONE INCH ON THIS SHEET, ADJUST SCALES ACCORDINGLY

JOB NO. 6918B.10
DRAWING NO. PSY-2
SHEET NO. 51 OF 107

FILENAME: C:\pw_working\projectwise\alaico\dms60458\Y-01Y002 8-26-14 08:38am ALaico XREFS: G-BDR; M-01M100; S-01S101; Mjb; BEH; CA-MJB; CA-DGB; CA-MJH; CA-AEB; CA-GRS; CA-KAM; rcprf048; CA-ALM; CA-ALM_11-30-11; CA-DGB_11-30-11; CA-MJB_11-30-11 Turlock_City_LogoPMS_FNL;

Last Saved By: ALaico 5-23-14 01:42pm

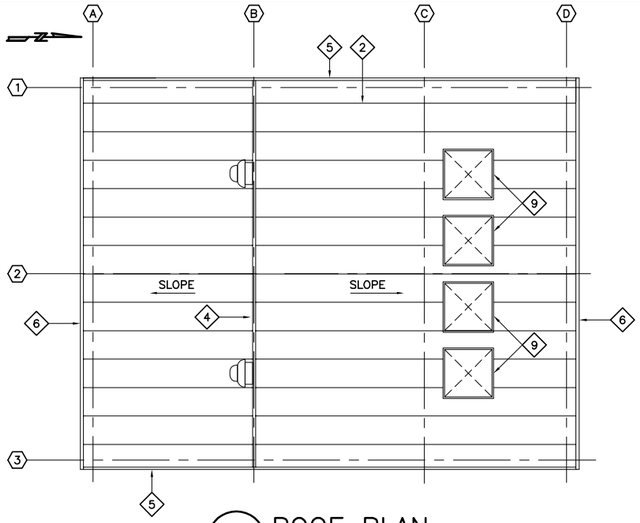

A ROOF PLAN
SCALE: 1/8" = 1'-0"
FILE: A-01A100

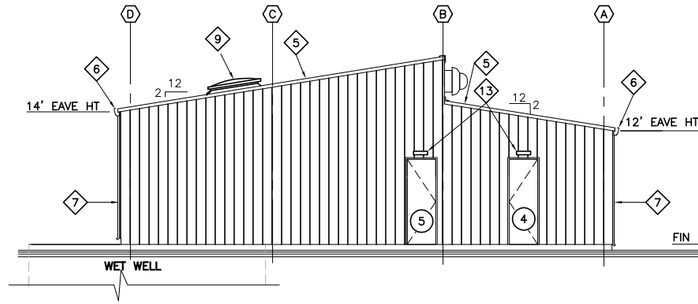

C WEST SIDE ELEVATION
SCALE: 1/8" = 1'-0"
FILE: A-01A100

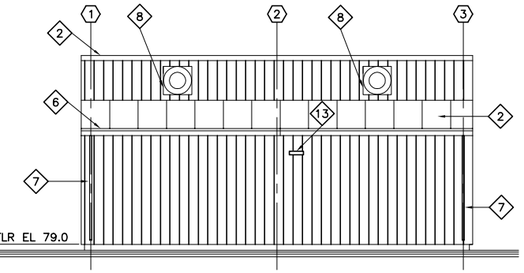

D SOUTH SIDE ELVATION
SCALE: 1/8" = 1'-0"
FILE: A-01A100

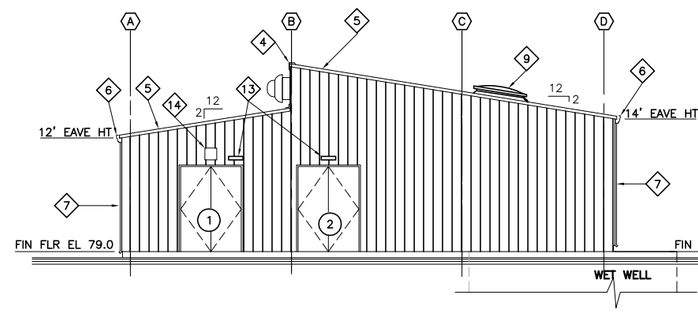

E EAST SIDE ELEVATION
SCALE: 1/8" = 1'-0"
FILE: A-01A100

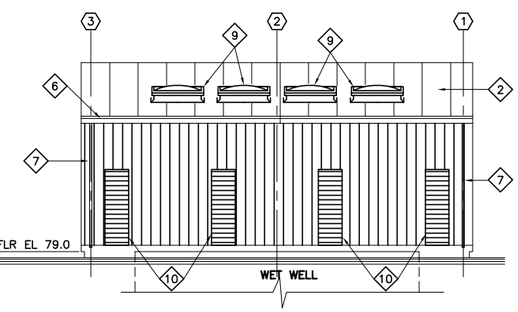

F NORTH SIDE ELEVATION
SCALE: 1/8" = 1'-0"
FILE: A-01A100

KEY NOTES:

1. STEEL WALL PANEL SYSTEM W/ BATT INSULATION PER SECTION B SIM/ PSM-1.
1A. STEEL WALL PANEL SYSTEM W/ BATT INSULATION AND ACOUSTICAL PANEL PER SECTION B/ PSM-1.
2. SLOPED METAL ROOF SYSTEM W/ INTERIOR FIBERGLASS BLANKET INSULATION. SEE SPEC.
3. INTERIOR PARTITION WALL (STEEL STUDS @ 24" C.C., DOUBLE WALL GYPSUM BOARD WITH BATT INSULATION AND ACOUSTICAL PANELS).
4. EAVE BOX TRIM
5. GABLE TRIM
6. GUTTER
7. GUTTER DOWNSPOUT
8. GREENHECK CWB-180-7 FAN
9. 5'x5' REMOVABLE SKYLIGHT
10. ACOUSTICAL AIR INTAKE, TYPE L-2 2'-6" X 8'-0"
11. WALL LIGHT, SEE ELEC DWGS
12. AC CONDENSER-SEE MECH DWGS
13. EXTERIOR LIGHTS, SEE ELEC DWGS
14. 12" X 18" LOUVER

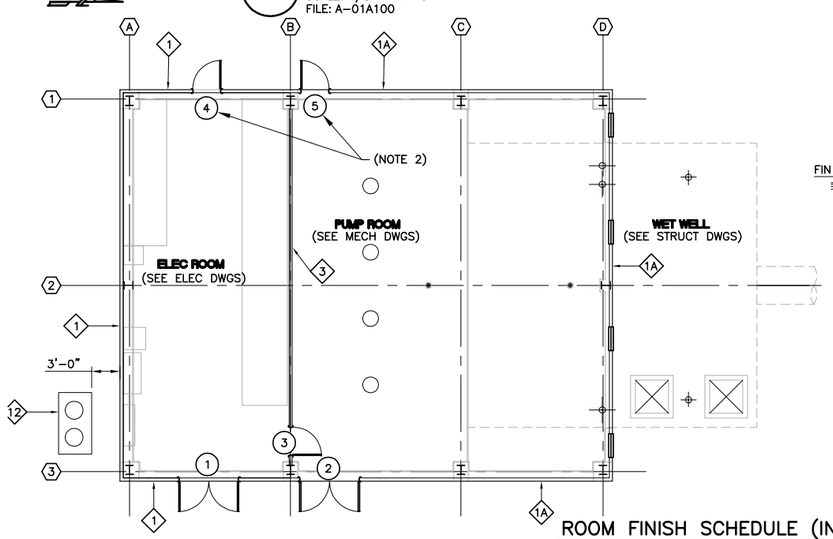

B FLOOR PLAN
SCALE: 1/8" = 1'-0"
FILE: A-01A100

ROOM FINISH SCHEDULE (INTERIOR)

(1) INSTALL PER STEEL BLDG MANUFACTURER STANDARD DETAILS

ROOM NAME	FLOOR		BASE	NORTH WALL (1)		SOUTH WALL (1)		EAST WALL (1)		WEST WALL (1)		ROOF (1)			REMARKS
	MAT'L	FINISH	MAT'L	MAT'L	FINISH	MAT'L	FINISH	MAT'L	FINISH	MAT'L	FINISH	MAT'L	HEIGHT	FINISH	
PUMP ROOM	CONC	SEALER	6" VINYL	GYP BD/ ACOUSTIC PANEL	PAINT SEMI-GLOSS	GYP BD/ ACOUSTIC PANEL	PAINT SEMI-GLOSS	GYP BD/ ACOUSTIC PANEL	PAINT SEMI-GLOSS	GYP BD/ ACOUSTIC PANEL	PAINT SEMI-GLOSS	INSUL STL DECK	VARIES	PAINT SEMI-GLOSS	PROVIDE BATT INSULATION BEHIND GYPSUM BOARD
ELECTRICAL ROOM	CONC	SEALER	--	GYP BD	PAINT SEMI-GLOSS	GYP BD	PAINT SEMI-GLOSS	GYP BD	PAINT SEMI-GLOSS	GYP BD	PAINT SEMI-GLOSS	INSUL STL DECK	VARIES	PAINT SEMI-GLOSS	PROVIDE BATT INSULATION AS SPECIFIED BEHIND GYPSUM BOARD

NOTE: ALL REQUIRED EXIT DOORS ARE TO BE OPENABLE FROM THE INSIDE WITHOUT THE USE OF A KEY OR SPECIAL KNOWLEDGE OR EFFORT.

HPC= HIGH PERFORMANCE COATING

USE THESE DETAILS UNLESS NOTED OTHERWISE (A105 TYP) (A104 TYP)

DOOR SCHEDULE

DOOR NO	LOCATION/ROOM NO.	INTERIOR OR EXTERIOR DOOR	DOOR					FRAME								HARDWARE SET NO.	HAND	EXIT DEVICE (Y/N)	ACTIVE LEAF OF PAIR	REMARKS
			SIZE (W X H)	THICKNESS	MATERIAL	TYPE	FINISH	SIZE- (W X H)	DEPTH	MATERIAL	TYPE	FINISH	DETAILS HEAD	DETAILS JAMB	DETAILS SILL					
																				COLOR (SW 4054)
1	ELECTRICAL ROOM	EXTERIOR	PR 3'-0" x 9'-2"	1-3/4"	STEEL	F	HPC	6'-4" x 9'-4"	6"	STEEL	R	HPC	PER STEEL BLDG MFR			HW-2	RHR/LHR	Y	RHR	SOUND PROOF DOOR STC 52, MIN
2	PUMP ROOM	EXTERIOR	PR 3'-2" x 9'-2"	1-3/4"	STEEL	F	HPC	6'-8" x 9'-4"	6"	STEEL	R	HPC	PER STEEL BLDG MFR			HW-2	RHR/LHR	N	RHR	
3	ELECTRICAL ROOM	INTERIOR	3'-0" x 7'-2"	1-3/4"	STEEL	F	HPC	3'-4" x 7'-4"	6"	STEEL	R	HPC	PER STEEL BLDG MFR			HW-1	LHR	N	RHR	
4	ELECTRICAL ROOM	EXTERIOR	3'-0" x 9'-2"	1-3/4"	STEEL	F	HPC	3'-4" x 9'-4"	6"	STEEL	R	HPC	PER STEEL BLDG MFR			HW-3	LHR	Y	RHR	
5	PUMP ROOM	EXTERIOR	3'-0" x 9'-2"	1-3/4"	STEEL	F	HPC	3'-4" x 9'-4"	6"	STEEL	R	HPC	PER STEEL BLDG MFR			HW-3	RHR	N	RHR	

NOTE:

1. THE METAL BUILDING MANUFACTURER SHALL INCLUDE ADDITIONAL STEEL BEAMS AND SUPPORTS IN ITS ROOF DESIGN TO SUPPORT THE FAN COIL UNIT (FCU) AND THE HVAC DUCTING. THE MANUFACTURER SHALL SUBMIT LAYOUT AND DETAILS DRAWINGS AS WELL AS CALCULATIONS FOR THE OWNER'S REVIEW PRIOR TO FABRICATION. THE DRAWINGS AND CALCULATIONS SHALL BE STAMPED BY A STRUCTURAL ENGINEER REGISTERED IN THE STATE OF CALIFORNIA. REFER TO SPECIFICATION FOR SEISMIC DESIGN REQUIREMENTS.
2. ELECTRONIC LOCKS AND KEYLESS ENTRY.

RECORD DRAWINGS

REV	DATE	BY	DESCRIPTION

DESIGNED RF
DRAWN JCI
CHECKED DT/BEH
DATE MAY 2012

DISCIPLINE ENGINEER

PROJECT ENGINEER: ** ORIGINAL SEALED BY DARREN G. BAUNE 12/07/11 C68899 **

VICE PRESIDENT: ** ORIGINAL SEALED BY MICHAEL J. BRITTEN 12/07/11 C27729 **

carollo

CITY OF TURLOCK INC. 1908
STANISLAUS COUNTY, CALIFORNIA

HARDING DRAIN BYPASS
PUMP STATION AND PIPELINE
ARCHITECTURAL
OUTFALL PUMP STATION
PLANS, ELEVATIONS AND SCHEDULES

VERIFY SCALES
BAR IS ONE INCH ON ORIGINAL DRAWING
0 1"
IF NOT ONE INCH ON THIS SHEET, ADJUST SCALES ACCORDINGLY

JOB NO. 6918B.10
DRAWING NO. PSA-1
SHEET NO. 52 OF 107

Last Saved By: Alaico 5-23-14 02:56pm

FILENAME: C:\pw_working\projectwise\alaico\dms60459\A-01A001 8-26-14 08:39am ALaico XREFS: G-BDR; A-01A100; Mjb; BEH; CA-MJB; CA-DGB; CA-MJH; CA-AEB; CA-GRS; CA-KAM; CA-ALM; CA-ALM_11-30-11; CA-DGB_11-30-11; CA-MJB_11-30-11 Turlck_City_LogoPMS_FNL; Untitled-1;

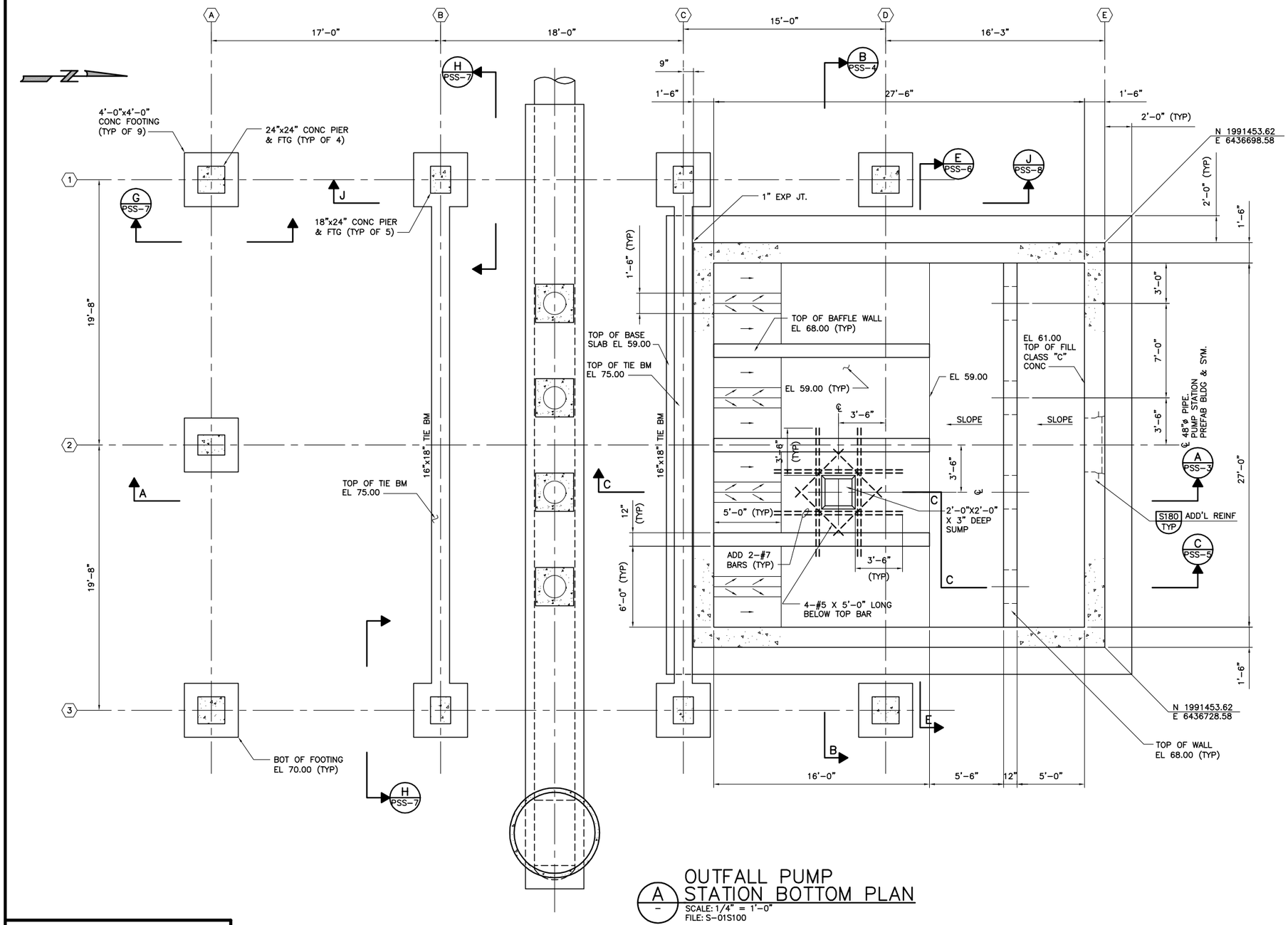

A OUTFALL PUMP STATION BOTTOM PLAN
SCALE: 1/4" = 1'-0"
FILE: S-01S100

NOTE:

1. THE METAL BUILDING MANUFACTURER SHALL INCLUDE ADDITIONAL STEEL BEAMS AND SUPPORTS IN ITS ROOF DESIGN TO SUPPORT THE FAN COIL UNIT (FCU) AND THE HVAC DUCTING. THE BUILDING MFR SHALL SUBMIT A STAMPED DESIGN CALCULATIONS FOR THE ENGINEERS REVIEW PRIOR TO FABRICATION. THE DRAWINGS AND CALCULATIONS SHALL BE STAMPED BY A STRUCTURAL ENGINEER REGISTERED IN THE STATE OF CALIFORNIA. REFER TO PROJECT SPECIFICATIONS FOR SEISMIC DESIGN REQUIREMENTS.

Beyaz & Patel, Inc.
Consulting Engineers
W0415 Walnut Creek, California

REV	DATE	BY	DESCRIPTION
			RECORD DRAWINGS

DESIGNED B. LOW
DRAWN E. POSADAS
CHECKED C. PAO
DATE MAY 2012

DISCIPLINE ENGINEER: ** ORIGINAL SEALED BY GARRY HO 12/07/11 S2534 **
PROJECT ENGINEER: ** ORIGINAL SEALED BY DARREN G. BAUNE 12/07/11 C68899 **
VICE PRESIDENT: ** ORIGINAL SEALED BY MICHAEL J. BRITTEN 12/07/11 C27729 **

carollo

CITY OF TURLOCK INC. 1908
STANISLAUS COUNTY, CALIFORNIA

HARDING DRAIN BYPASS
PUMP STATION AND PIPELINE
STRUCTURAL
OUTFALL PUMP STATION PLANS

VERIFY SCALES
BAR IS ONE INCH ON ORIGINAL DRAWING
0 1"
IF NOT ONE INCH ON THIS SHEET, ADJUST SCALES ACCORDINGLY

JOB NO. 6918B.10
DRAWING NO. PSS-1
SHEET NO. 53 OF 107

Last Saved By: ALaico 8-23-14 10:34am

FILENAME: C:\pw_working\projectwise\alaico\dms60461\S-01S001 8-26-14 08:40am ALaico XREFS: G-BDR; S-01S100; Mjb; BEH; CA-MJB; CA-DGB; CA-MJH; CA-AEB; CA-GRS; CA-KAM; CA-ALM; CA-ALM_11-30-11; CA-DGB_11-30-11; CA-MJB_11-30-11 Turlock_City_LogoPMS_FNL;

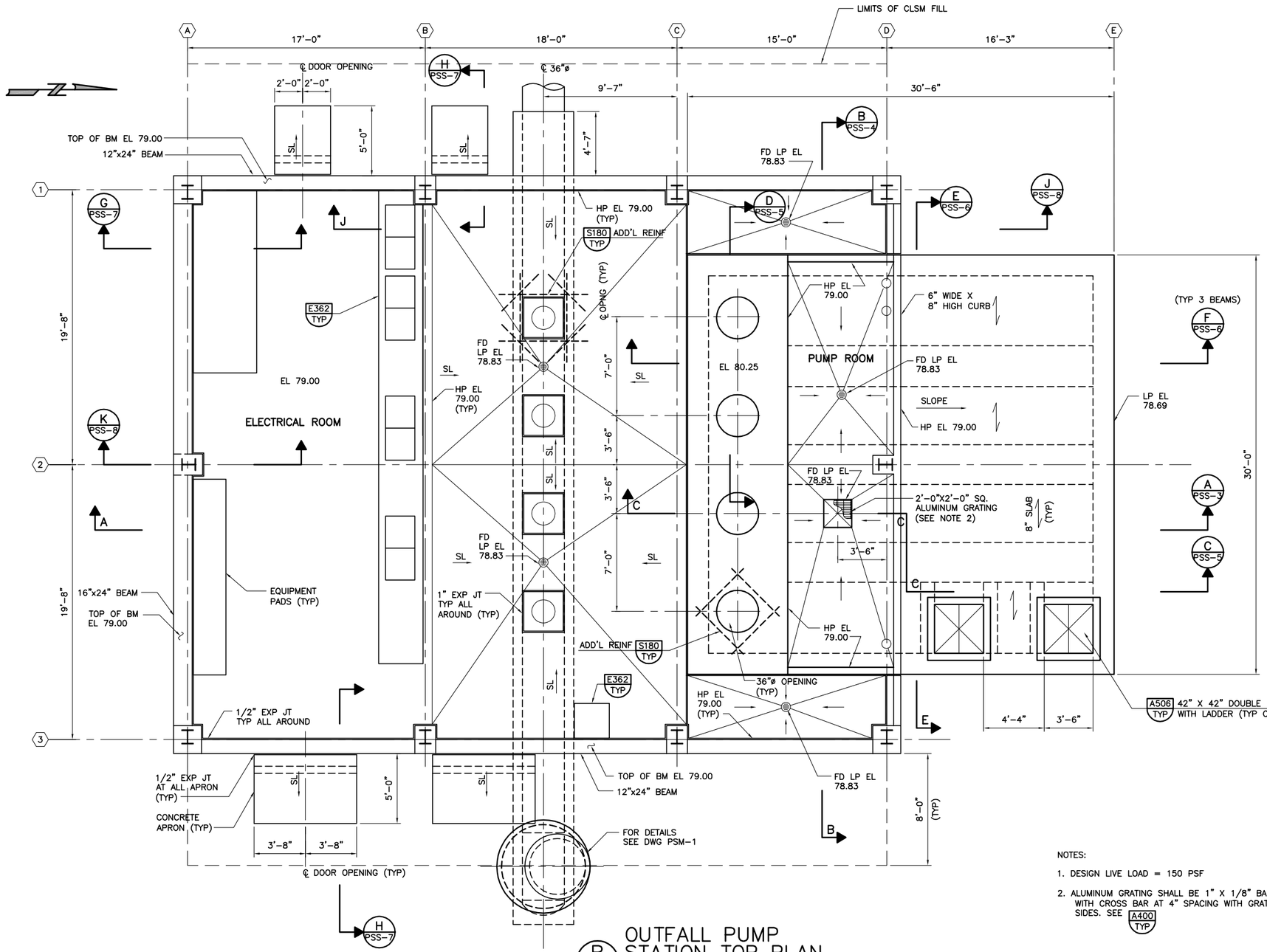

NOTES:

1. DESIGN LIVE LOAD = 150 PSF
2. ALUMINUM GRATING SHALL BE 1" X 1/8" BAR AT 1 3/16" SPACING WITH CROSS BAR AT 4" SPACING WITH GRATING REBATE ON FOUR SIDES. SEE A400 TYP

B – OUTFALL PUMP STATION TOP PLAN

SCALE: 1/4" = 1'-0"
FILE: S-01S101

Beyaz & Patel, Inc.
Consulting Engineers
W0415 Walnut Creek, California

RECORD DRAWINGS

REV	DATE	BY	DESCRIPTION

DESIGNED B. LOW
DRAWN E. POSADAS
CHECKED C. PAO
DATE MAY 2012

DISCIPLINE ENGINEER: ** ORIGINAL SEALED BY GARRY HO 12/07/11 S2534 **
PROJECT ENGINEER: ** ORIGINAL SEALED BY DARREN G. BAUNE 12/07/11 C68899 **
VICE PRESIDENT: ** ORIGINAL SEALED BY MICHAEL J. BRITTEN 12/07/11 C27729 **

carollo

CITY OF TURLOCK INC. 1908
STANISLAUS COUNTY, CALIFORNIA

HARDING DRAIN BYPASS
PUMP STATION AND PIPELINE
STRUCTURAL
OUTFALL PUMP STATION TOP PLAN

VERIFY SCALES
BAR IS ONE INCH ON ORIGINAL DRAWING
0 1"
IF NOT ONE INCH ON THIS SHEET, ADJUST SCALES ACCORDINGLY

JOB NO. 6918B.10
DRAWING NO. PSS-2
SHEET NO. 54 OF 107

FILENAME: C:\pw_working\projectwise\alaico\dms60461\S-01S002 8-26-14 08:40am ALaico XREFS: G-BDR; S-01S101; Mjb; BEH; CA-MJB; CA-DGB; CA-MJH; CA-AEB; CA-GRS; CA-KAM; CA-ALM; CA-ALM_11-30-11; CA-DGB_11-30-11; CA-MJB_11-30-11 Turlock_City_LogoPMS_FNL;

Last Saved By: ALaico 6-23-14 10:38am

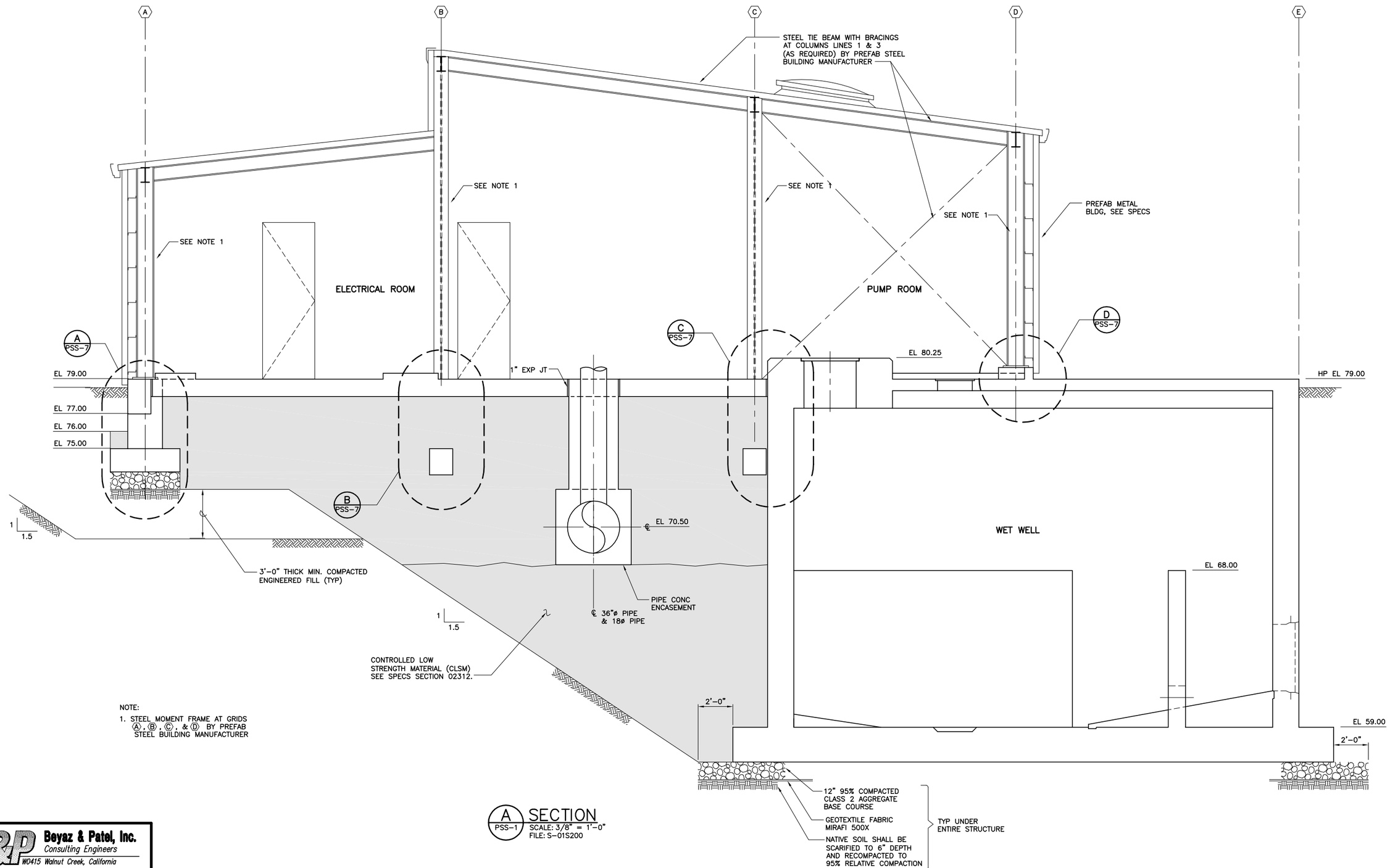

NOTE:

1. STEEL MOMENT FRAME AT GRIDS Ⓐ, Ⓑ, Ⓒ, & Ⓓ BY PREFAB STEEL BUILDING MANUFACTURER

A PSS-1 SECTION
SCALE: 3/8" = 1'-0"
FILE: S-01S200

Beyaz & Patel, Inc.
Consulting Engineers
W0415 Walnut Creek, California

RECORD DRAWINGS

REV	DATE	BY	DESCRIPTION

DESIGNED	B. LOW
DRAWN	E. POSADAS
CHECKED	C. PAO
DATE	MAY 2012
DISCIPLINE ENGINEER	** ORIGINAL SEALED BY GARRY HO 12/07/11 S2534 **
PROJECT ENGINEER	** ORIGINAL SEALED BY DARREN G. BAUNE 12/07/11 C68999 **
VICE PRESIDENT	** ORIGINAL SEALED BY MICHAEL J. BRITTEN 12/07/11 C27729 **

carollo

CITY OF TURLOCK INC. 1908
STANISLAUS COUNTY, CALIFORNIA

HARDING DRAIN BYPASS
PUMP STATION AND PIPELINE
STRUCTURAL
OUTFALL PUMP STATION
SECTIONS

VERIFY SCALES
BAR IS ONE INCH ON ORIGINAL DRAWING
0 1"
IF NOT ONE INCH ON THIS SHEET, ADJUST SCALES ACCORDINGLY

JOB NO. 6918B.10
DRAWING NO. PSS-3
SHEET NO. 55 OF 107

Last Saved By: ALaico 5-27-14 08:58am

FILENAME: C:\pw_working\projectwise\alaico\dms60461\S-01S003 8-26-14 08:40am ALaico XREFS: G-BDR; S-01S200; Mjb; BEH; CA-AEB; CA-GRS; CA-MJB; CA-DGB; CA-MJH; CA-ALM; CA-ALM_11-30-11; CA-DGB_11-30-11; CA-MJB_11-30-11; CA-KAM Turlock_City_LogoPMS_FNL;

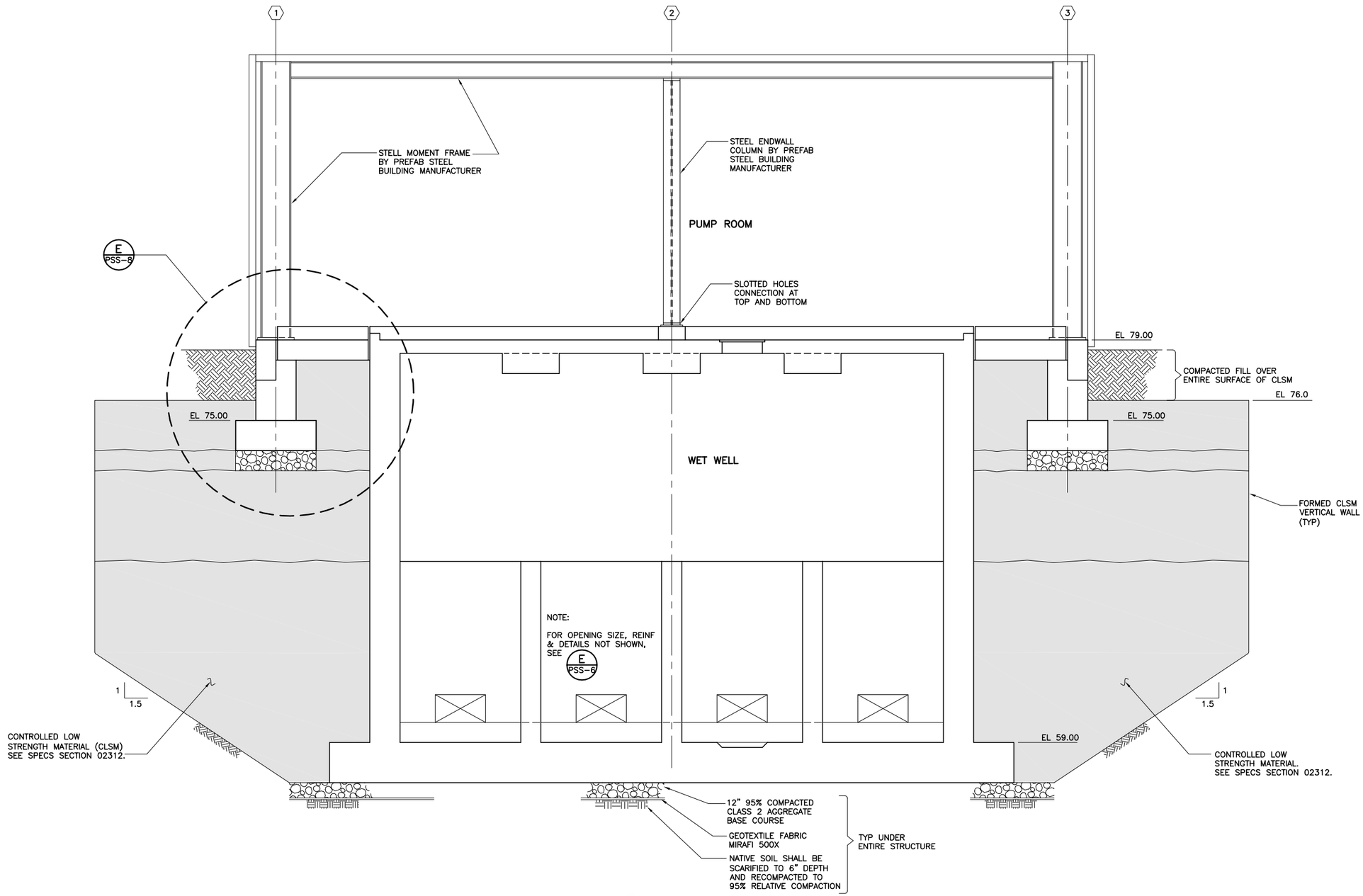

B PSS-1 SECTION
SCALE: 3/8" = 1'-0"
FILE: S-01S201

Beyaz & Patel, Inc.
Consulting Engineers
W0415 Walnut Creek, California

RECORD DRAWINGS

REV	DATE	BY	DESCRIPTION

DESIGNED B. LOW
DRAWN E. POSADAS
CHECKED C.PAO
DATE MAY 2012

DISCIPLINE ENGINEER: ** ORIGINAL SEALED BY GARRY HO 12/07/11 S2534 **
PROJECT ENGINEER: ** ORIGINAL SEALED BY DARREN G. BAUNE 12/07/11 C68899 **
VICE PRESIDENT: ** ORIGINAL SEALED BY MICHAEL J. BRITTEN 12/07/11 C27729 **

carollo

CITY OF TURLOCK INC. 1908
STANISLAUS COUNTY, CALIFORNIA

HARDING DRAIN BYPASS
PUMP STATION AND PIPELINE
STRUCTURAL
OUTFALL PUMP STATION SECTIONS

VERIFY SCALES
BAR IS ONE INCH ON ORIGINAL DRAWING
0 1"
IF NOT ONE INCH ON THIS SHEET, ADJUST SCALES ACCORDINGLY

JOB NO. 6918B.10
DRAWING NO. PSS-4
SHEET NO. 56 OF 107

FILENAME: C:\pw_working\projectwise\alaico\dms60461\S-01S004 8-26-14 08:41am ALaico XREFS: G-BDR; S-01S201; Mjb; BEH; CA-MJB; CA-DGB; CA-MJH; CA-AEB; CA-GRS; CA-KAM; CA-ALM; CA-ALM_11-30-11; CA-DGB_11-30-11; CA-MJB_11-30-11 Turlck_City_LogoPMS_FNL;

Last Saved By: ALaico 5-27-14 08:59am

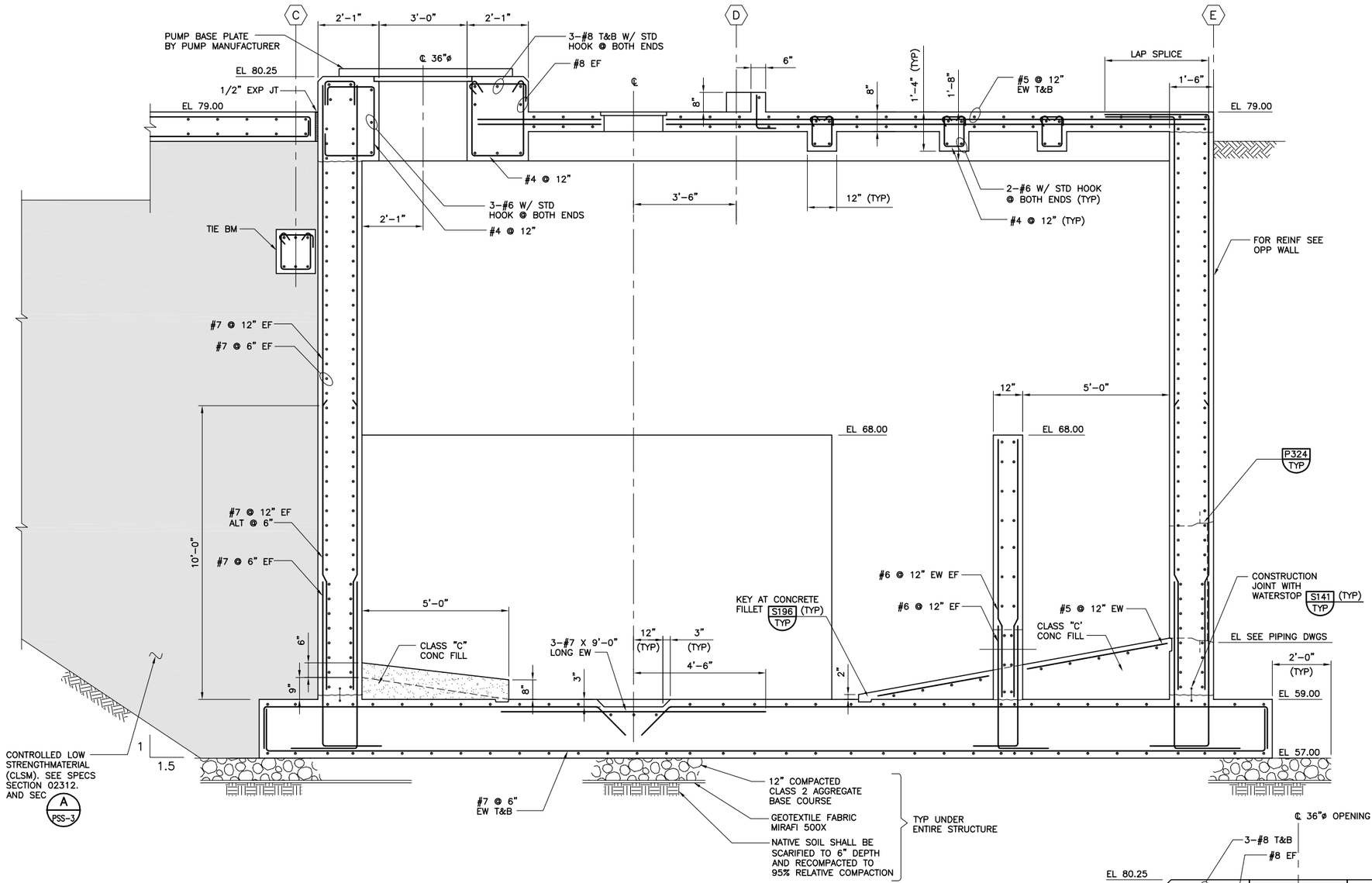

C PSS-1 SECTION
SCALE: 1/2" = 1'-0"
FILE: S-01S205

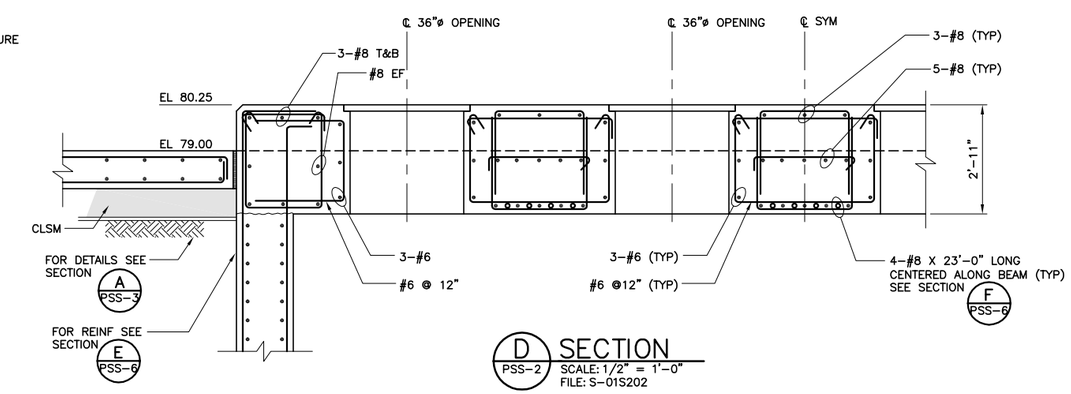

D PSS-2 SECTION
SCALE: 1/2" = 1'-0"
FILE: S-01S202

Beyaz & Patel, Inc.
Consulting Engineers
W0415 Walnut Creek, California

RECORD DRAWINGS

REV	DATE	BY	DESCRIPTION

DESIGNED B.LOW
DRAWN E.POSADAS
CHECKED C. PAO
DATE MAY 2012

DISCIPLINE ENGINEER: ** ORIGINAL SEALED BY GARRY HO 12/07/11 S2534 **
PROJECT ENGINEER: ** ORIGINAL SEALED BY DARREN G. BAUNE 12/07/11 C68899 **
VICE PRESIDENT: ** ORIGINAL SEALED BY MICHAEL J. BRITTEN 12/07/11 C27729 **

carollo

CITY OF TURLOCK INC. 1908
STANISLAUS COUNTY, CALIFORNIA

HARDING DRAIN BYPASS
PUMP STATION AND PIPELINE
STRUCTURAL
OUTFALL PUMP STATION
SECTIONS

VERIFY SCALES
BAR IS ONE INCH ON ORIGINAL DRAWING
0 1"
IF NOT ONE INCH ON THIS SHEET, ADJUST SCALES ACCORDINGLY

JOB NO. 6918B.10
DRAWING NO. PSS-5
SHEET NO. 57 OF 107

FILENAME: C:\pw_working\projectwise\alaico\dms60461\S-01S005 8-26-14 08:42am ALaico XREFS: G-BDR; S-01S202; S-01S205; Mjb; BEH; CA-MJB; CA-DGB; CA-MJH; CA-AEB; CA-GRS; CA-KAM; CA-ALM; CA-ALM_11-30-11; CA-DGB_11-30-11; CA-MJB_11-30-11 Turlck_City_LogoPMS_FNL;

Last Saved By: ALaico 5-27-14 09:07am

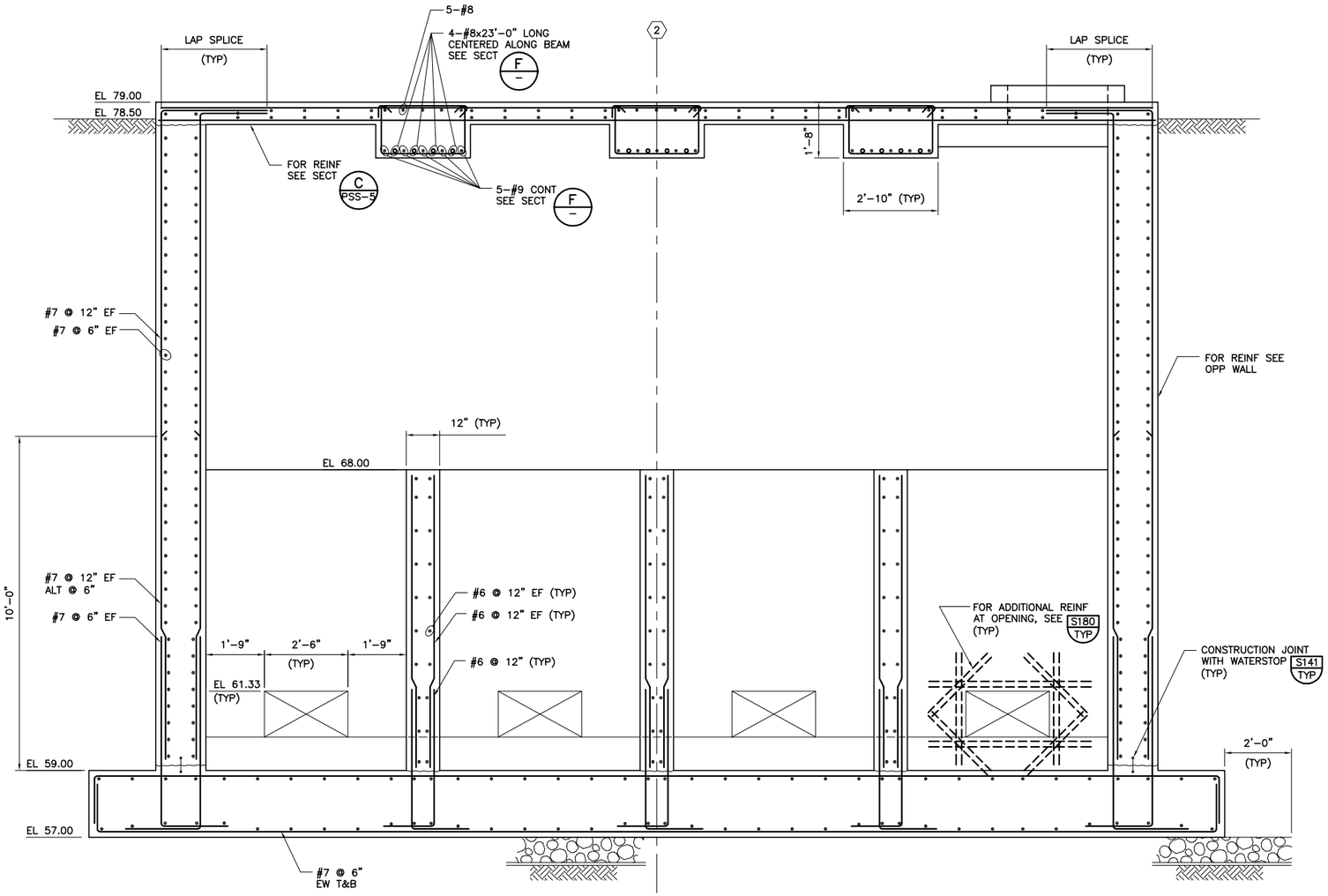

E/PSS-1 SECTION
SCALE: 1/2" = 1'-0"
FILE: S-01S204

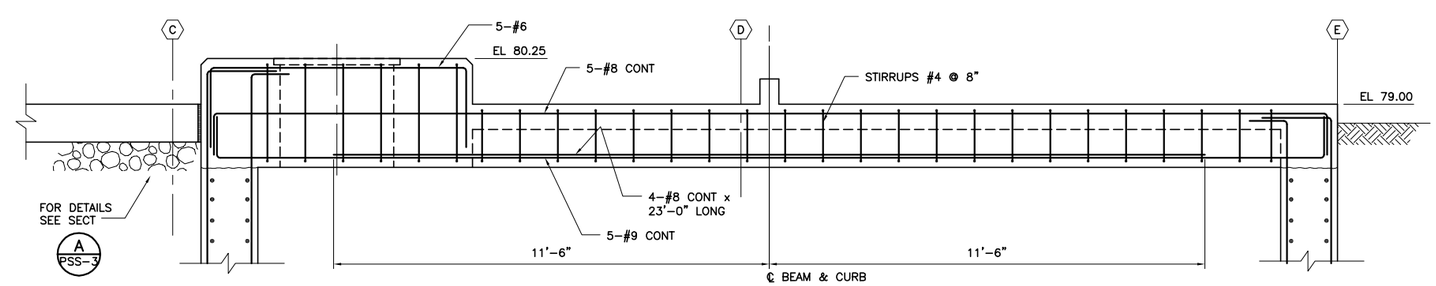

(TYPICAL 3 PLACES)

F/PSS-2 SECTION
SCALE: 1/2" = 1'-0"
FILE: S-01S203

Beyaz & Patel, Inc.
Consulting Engineers
W0415 Walnut Creek, California

RECORD DRAWINGS

REV	DATE	BY	DESCRIPTION

DESIGNED B. LOW
DRAWN E. POSADAS
CHECKED C. PAO
DATE MAY 2012

DISCIPLINE ENGINEER: ** ORIGINAL SEALED BY GARRY HO 12/07/11 S2534 **
PROJECT ENGINEER: ** ORIGINAL SEALED BY DARREN G. BAUNE 12/07/11 C68899 **
VICE PRESIDENT: ** ORIGINAL SEALED BY MICHAEL J. BRITTEN 12/07/11 C27729 **

carollo

CITY OF TURLOCK INC. 1908
STANISLAUS COUNTY, CALIFORNIA

HARDING DRAIN BYPASS
PUMP STATION AND PIPELINE
STRUCTURAL
OUTFALL PUMP STATION
SECTIONS

VERIFY SCALES
BAR IS ONE INCH ON ORIGINAL DRAWING
0 — 1"
IF NOT ONE INCH ON THIS SHEET, ADJUST SCALES ACCORDINGLY

JOB NO. 6918B.10
DRAWING NO. PSS-6
SHEET NO. 58 OF 107

FILENAME: C:\pw_working\projectwise\alaico\dms60461\S-01S006 8-26-14 08:42am ALaico XREFS: G-BDR; S-01S203; S-01S204; MJB; BEH; CA-MJB; CA-DGB; CA-MJH; CA-AEB; CA-GRS; CA-KAM; CA-ALM; CA-ALM_11-30-11; CA-DGB_11-30-11; CA-MJB_11-30-11 Turlck_City_LogoPMS_FNL;

Last Saved By: dthung 5-14-12 01:19pm

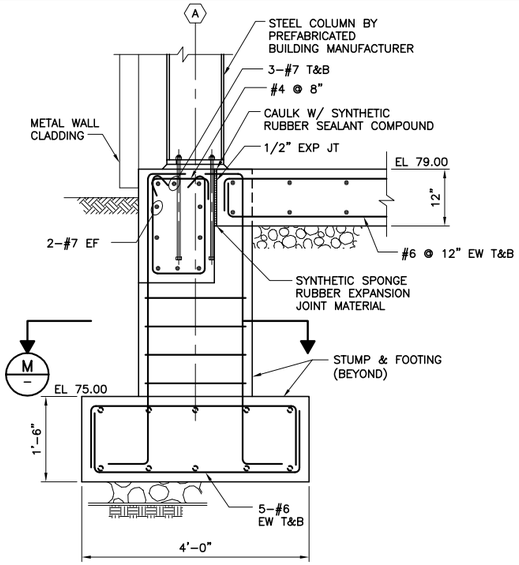

A PSS-3 DETAIL
SCALE: 3/4" = 1'-0"
FILE: S-01S206

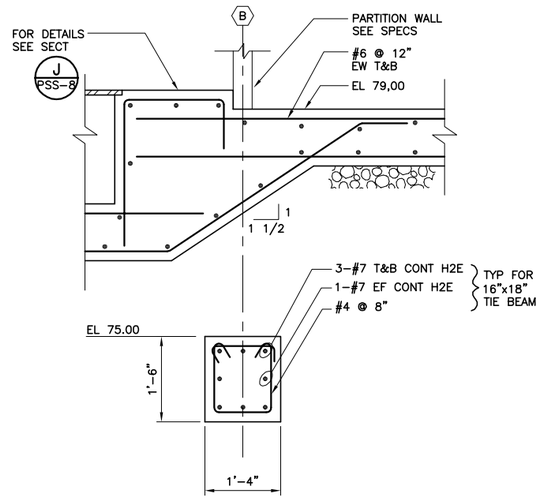

B PSS-3 DETAIL
SCALE: 3/4" = 1'-0"
FILE: S-01S207

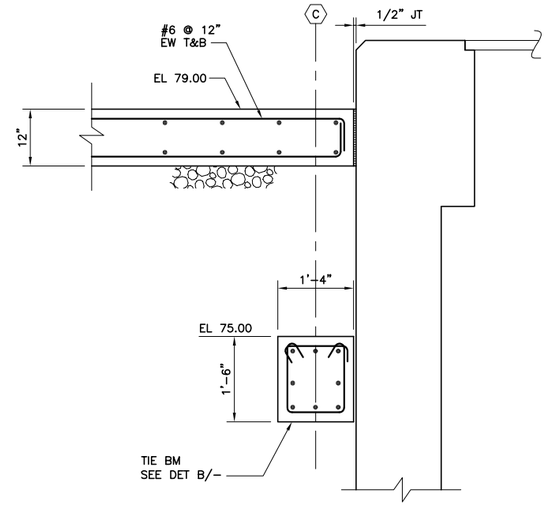

C PSS-3 DETAIL
SCALE: 3/4" = 1'-0"
FILE: S-01S208

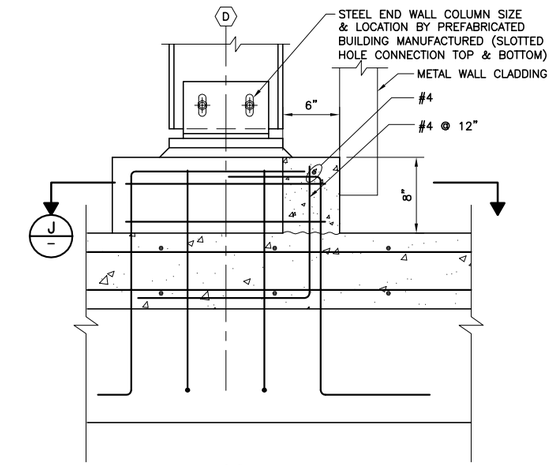

D PSS-3 DETAIL
SCALE: 1 1/2" = 1'-0"
FILE: S-01S209

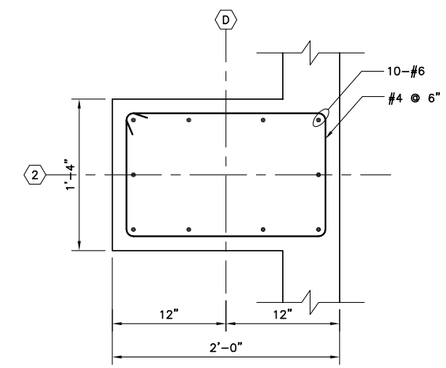

J - SECTION
SCALE: 1 1/2" = 1'-0"
FILE: S-01S215

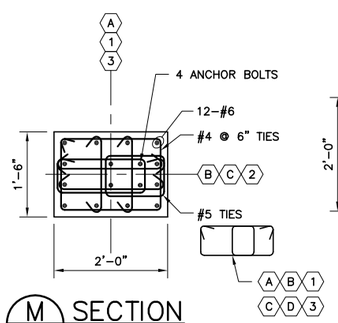

M - SECTION
SCALE: 3/4" = 1'-0"
FILE: S-01S218

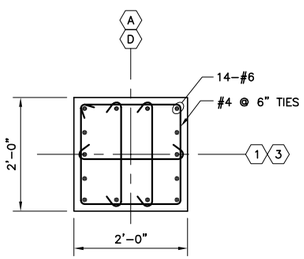

N - SECTION
SCALE: 3/4" = 1'-0"
FILE: S-01S217

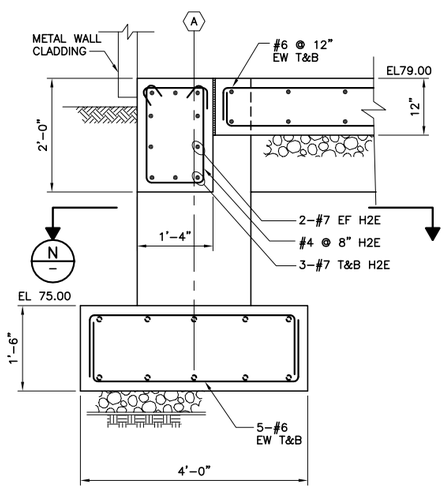

G PSS-1 SECTION
SCALE: 3/4" = 1'-0"
FILE: S-01S210

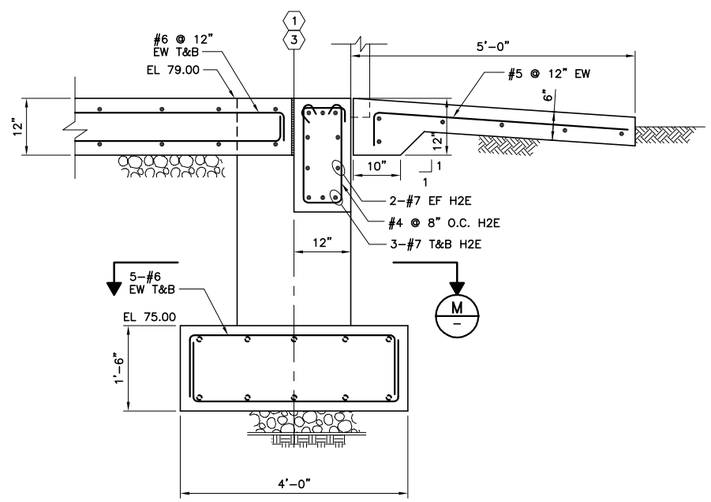

H PSS-1 SECTION
SCALE: 3/4" = 1'-0"
FILE: S-01S211

Beyaz & Patel, Inc.
Consulting Engineers
W0415 Walnut Creek, California

REV	DATE	BY	DESCRIPTION
			RECORD DRAWINGS

DESIGNED
DRAWN E. POSADAS
CHECKED
DATE MAY 2012

DISCIPLINE ENGINEER: ** ORIGINAL SEALED BY GARRY HO 12/07/11 S2534 **
PROJECT ENGINEER: ** ORIGINAL SEALED BY DARREN G. BAUNE 12/07/11 C68899 **
VICE PRESIDENT: ** ORIGINAL SEALED BY MICHAEL J. BRITTEN 12/07/11 C27729 **

carollo

CITY OF TURLOCK INC. 1908
STANISLAUS COUNTY, CALIFORNIA

HARDING DRAIN BYPASS
PUMP STATION AND PIPELINE
STRUCTURAL
OUTFALL PUMP STATION
SECTIONS AND DETAILS

VERIFY SCALES
BAR IS ONE INCH ON ORIGINAL DRAWING
0 1"
IF NOT ONE INCH ON THIS SHEET, ADJUST SCALES ACCORDINGLY

JOB NO. 6918B.10
DRAWING NO. PSS-7
SHEET NO. 59 OF 107

Last Saved By: ALaico 5-27-14 09:38am

FILENAME: C:\pw_working\projectwise\alaico\dms60461\S-01S007 8-26-14 08:43am ALaico XREFS: G-BDR; S-01S206; S-01S207; S-01S208; S-01S209; S-01S210; S-01S211; S-01S215; S-01S217; S-01S218; Mjb; BEH; CA-MJB; CA-DGB; CA-MJH; CA-AEB; CA-GRS; CA-KAM; CA-ALM; CA-ALM_11-30-11; CA-DGB_11-30-11; CA-MJB_11-30-11 Turlock_City_LogoPMS_FNL;

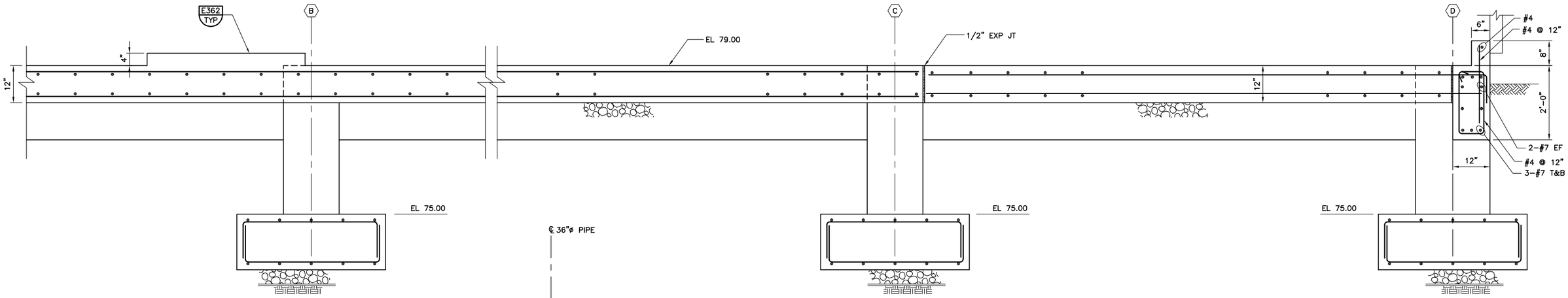

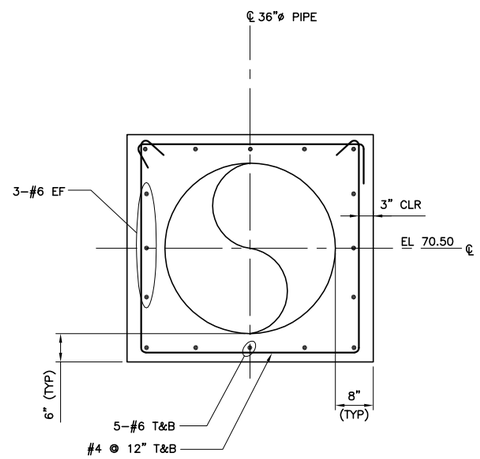

J SECTION
PSS-2 SCALE: 3/4" = 1'-0"
FILE: S-01S212

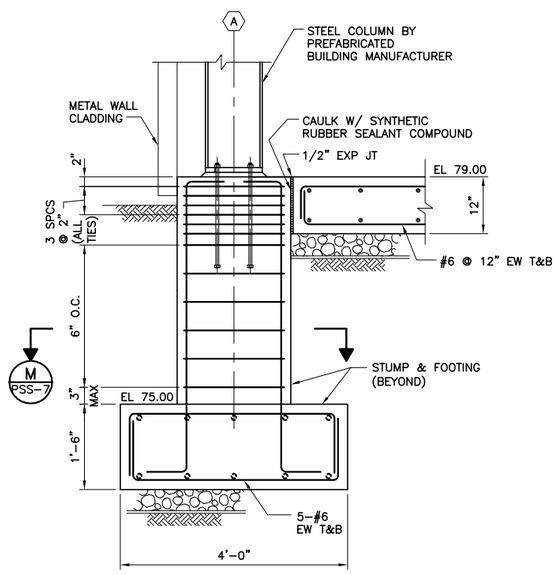

K SECTION
PSS-2 SCALE: 3/4" = 1'-0"
FILE: S-01S219

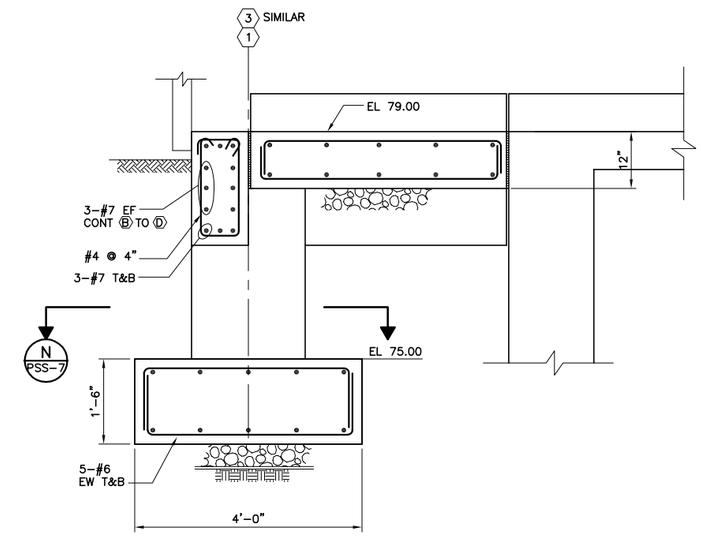

E DETAIL
PSS-4 SCALE: 3/4" = 1'-0"
FILE: S-01S213

Beyaz & Patel, Inc.
Consulting Engineers
W0415 Walnut Creek, California

RECORD DRAWINGS

REV	DATE	BY	DESCRIPTION

DESIGNED B. LOW
DRAWN E. POSADAS
CHECKED C. PAO
DATE MAY 2012

DISCIPLINE ENGINEER: ** ORIGINAL SEALED BY GARRY HO 12/07/11 S2534 **
PROJECT ENGINEER: ** ORIGINAL SEALED BY DARREN G. BAUNE 12/07/11 C68899 **
VICE PRESIDENT: ** ORIGINAL SEALED BY MICHAEL J. BRITTEN 12/07/11 C27729 **

carollo

CITY OF TURLOCK INC. 1908
STANISLAUS COUNTY, CALIFORNIA

HARDING DRAIN BYPASS
PUMP STATION AND PIPELINE
STRUCTURAL
OUTFALL PUMP STATION
SECTIONS AND DETAILS

VERIFY SCALES
BAR IS ONE INCH ON ORIGINAL DRAWING
0 1"
IF NOT ONE INCH ON THIS SHEET, ADJUST SCALES ACCORDINGLY

JOB NO. 6918B.10
DRAWING NO. PSS-8
SHEET NO. 60 OF 107

FILENAME: C:\pw_working\projectwise\alaico\dms60461\S-01S008 8-26-14 08:43am ALaico XREFS: G-BDR; S-01S213; S-01S212; S-01S219; Mjb; BEH; CA-MJB; CA-DGB; CA-MJH; CA-AEB; CA-GRS; CA-KAM; CA-ALM; CA-ALM_11-30-11; CA-DGB_11-30-11; CA-MJB_11-30-11 Turlock_City_LogoPMS_FNL;

Last Saved By: ALaico 5-27-14 09:50am

NOTES:

1. THE METAL BUILDING MANUFACTURER SHALL INCLUDE ADDITIONAL STEEL BEAMS AND SUPPORTS IN ITS ROOF DESIGN TO SUPPORT THE FAN COIL UNIT (FCU) AND THE HVAC DUCTING. THE MANUFACTURER SHALL SUBMIT LAYOUT AND DETAILS DRAWINGS AS WELL AS CALCULATIONS FOR THE OWNER'S REVIEW PRIOR TO FABRICATION. THE DRAWINGS AND CALCULATIONS SHALL BE STAMPED BY A STRUCTURAL ENGINEER REGISTERED IN THE STATE OF CALIFORNIA.
2. OMIT ACOUSTICAL PANELS ALONG THE INSIDE WALL OF THE ELECTRICAL ROOM. ACOUSTICAL PANELS ARE NOT REQUIRED ON THE INTERIOR WALL OF THE ELECTRICAL ROOM. REFER TO DETAIL B FOR ADDITIONAL REQUIREMENTS.
3. INTERIOR PARTITION WALL SHALL BE DOUBLE WALL GYPSUM BOARD WITH NO METAL SIDING. SEE KEY NOTE 3 ON DWG PSA-1 FOR ADDITIONAL REQUIREMENTS.

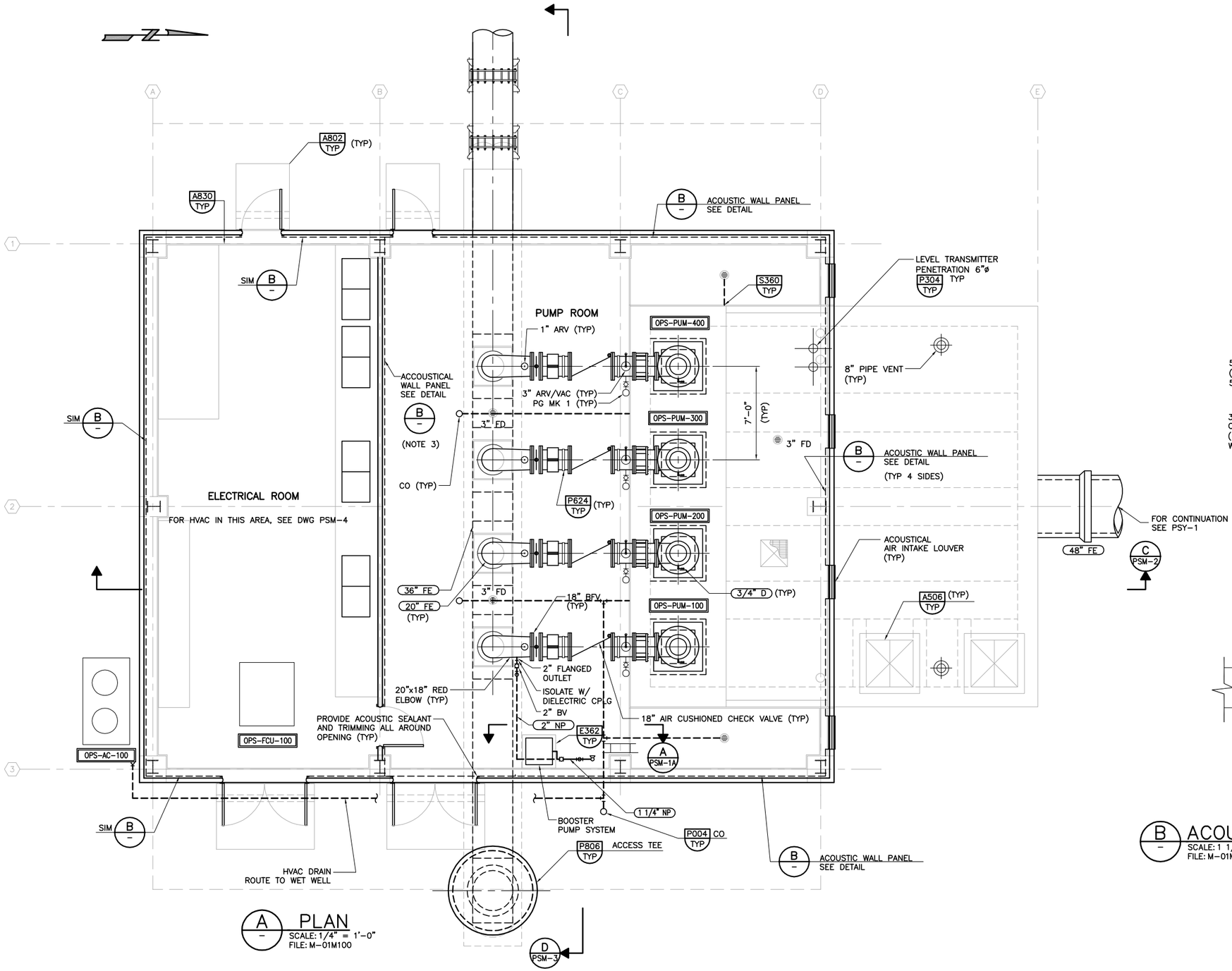

A – PLAN
SCALE: 1/4" = 1'-0"
FILE: M-01M100

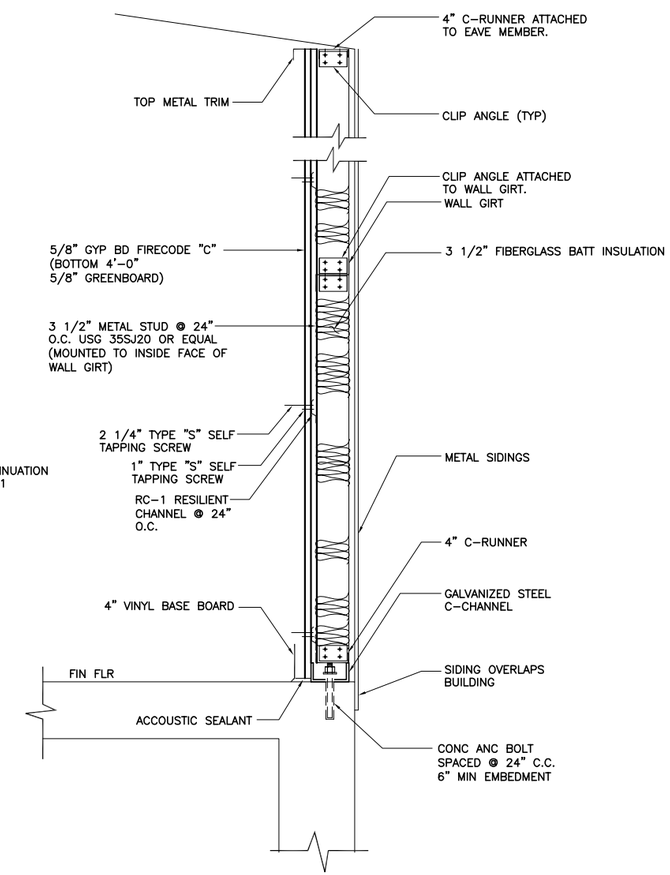

B – ACOUSTICAL WALL PANEL DETAIL – PUMP ROOM
SCALE: 1 1/2" = 1'-0"
FILE: M-01M102

REV	DATE	BY	DESCRIPTION
			RECORD DRAWINGS

DESIGNED DGB
DRAWN JCI/DST
CHECKED DT
DATE MAY 2012

DISCIPLINE ENGINEER: ** ORIGINAL SEALED BY MICHAEL J. HARTLAUB 12/07/11 C74901 **
PROJECT ENGINEER: ** ORIGINAL SEALED BY DARREN G. BAUNE 12/07/11 C68899 **
VICE PRESIDENT: ** ORIGINAL SEALED BY MICHAEL J. BRITTEN 12/07/11 C27729 **

carollo

CITY OF TURLOCK INC. 1908
STANISLAUS COUNTY, CALIFORNIA

HARDING DRAIN BYPASS
PUMP STATION AND PIPELINE
MECHANICAL
OUTFALL PUMP STATION
PLAN AND DETAIL

VERIFY SCALES
BAR IS ONE INCH ON ORIGINAL DRAWING
0 1"
IF NOT ONE INCH ON THIS SHEET, ADJUST SCALES ACCORDINGLY

JOB NO. 6918B.10
DRAWING NO. PSM-1
SHEET NO. 61 OF 107

Last Saved By: Alaico 8-24-14 09:54am

FILENAME: C:\pw_working\projectwise\alaico\dms60462\M-01M001 8-26-14 08:44am ALaico XREFS: M-01M100; M-01M102; FHF; FURNACE; S-01S101; G-BDR; Mjb; BEH; CA-MJB; CA-DGB; CA-MJH; CA-ALM; CA-ALM_11-30-11; CA-DGB_11-30-11; CA-MJB_11-30-11; CA-AEB; CA-GRS; CA-KAM Furnace; Turlck_City_LogoPMS_FNL;

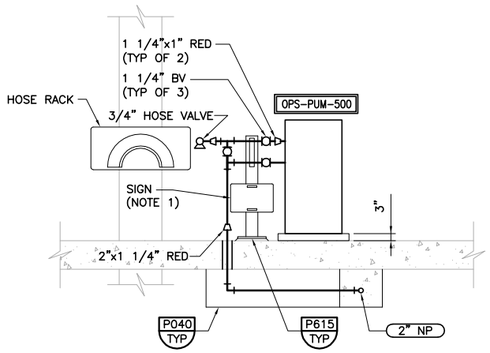

NOTES:

1. SIGN SHALL MATCH SIGN IN TYPICAL DETAIL M276 AND READ: CAUTION IMPURE WATER DO NOT DRINK.
2. ALL FITTINGS SHALL BE TAPED AND THREADED.

A / PSM-1 SECTION
SCALE: 3/8" = 1'-0"
FILE: M-01M301

REV	DATE	BY	DESCRIPTION
			RECORD DRAWINGS

DESIGNED DGB
DRAWN JCI/DST
CHECKED DT
DATE MAY 2012

DISCIPLINE ENGINEER: ** ORIGINAL SEALED BY MICHAEL J. HARTLAUB 12/07/11 C74901 **
PROJECT ENGINEER: ** ORIGINAL SEALED BY DARREN G. BAUNE 12/07/11 C68899 **
VICE PRESIDENT: ** ORIGINAL SEALED BY MICHAEL J. BRITTEN 12/07/11 C27729 **

carollo

CITY OF TURLOCK INC. 1908
STANISLAUS COUNTY, CALIFORNIA

HARDING DRAIN BYPASS
PUMP STATION AND PIPELINE
MECHANICAL
OUTFALL PUMP STATION
PLAN AND DETAIL – A

VERIFY SCALES
BAR IS ONE INCH ON ORIGINAL DRAWING
0 1"
IF NOT ONE INCH ON THIS SHEET, ADJUST SCALES ACCORDINGLY

JOB NO. 6918B.10
DRAWING NO. PSM-1A
SHEET NO. 61A OF 107

FILENAME: C:\pw_working\projectwise\alaico\dms60462\M-01M005 8-26-14 08:44am ALaico XREFS: G-BDR; Mjb; BEH; FHF; FURNACE; CA-MJB; CA-DGB; CA-MJH; CA-AEB; CA-GRS; CA-KAM; M-01M301; CA-ALM; CA-ALM_11-30-11; CA-DGB_11-30-11; CA-MJB_11-30-11 Turlck_City_LogoPMS_FNL; Furnace;

Last Saved By: ALaico 5-27-14 11:03am

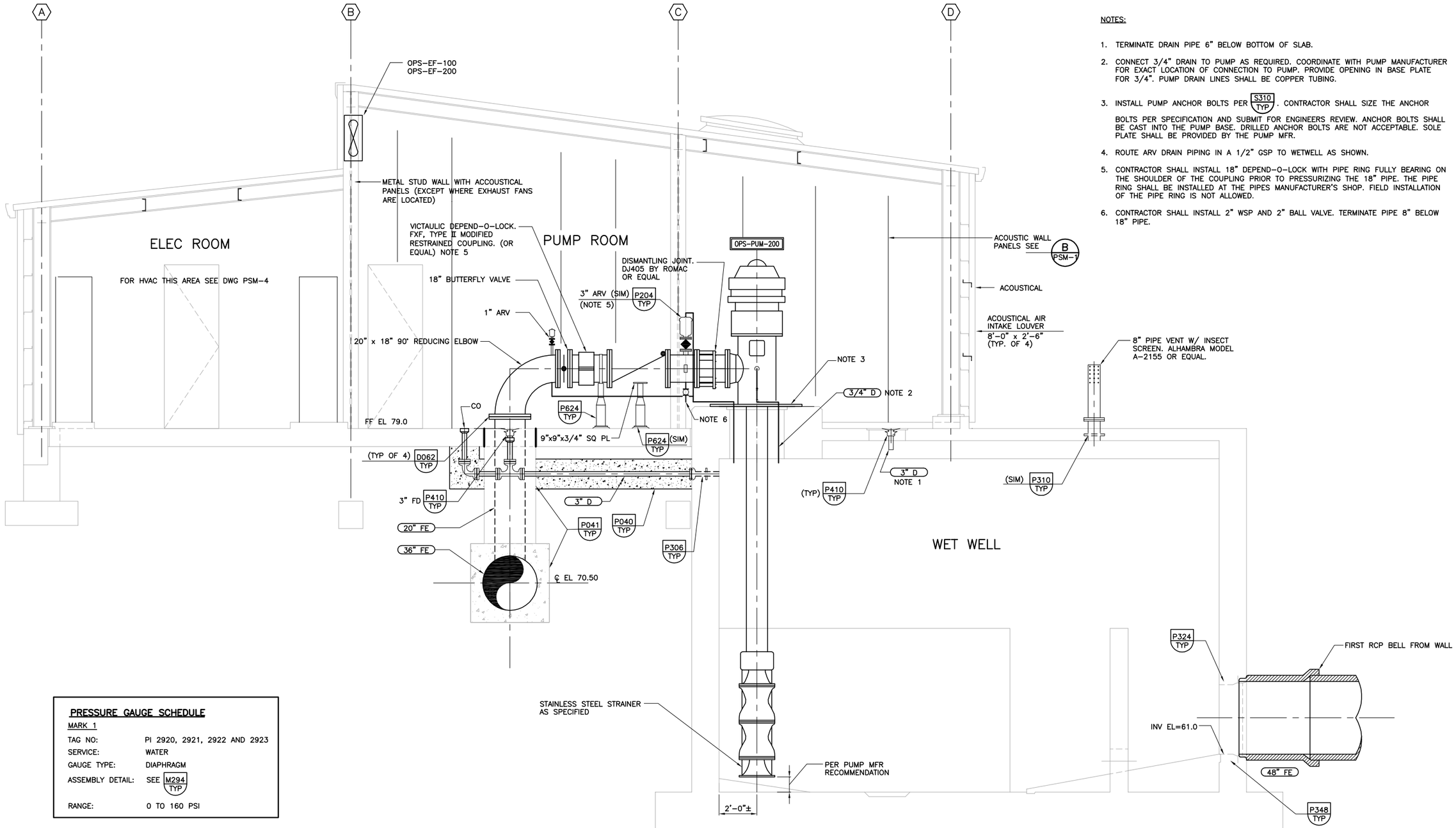

NOTES:

1. TERMINATE DRAIN PIPE 6" BELOW BOTTOM OF SLAB.
2. CONNECT 3/4" DRAIN TO PUMP AS REQUIRED. COORDINATE WITH PUMP MANUFACTURER FOR EXACT LOCATION OF CONNECTION TO PUMP. PROVIDE OPENING IN BASE PLATE FOR 3/4". PUMP DRAIN LINES SHALL BE COPPER TUBING.
3. INSTALL PUMP ANCHOR BOLTS PER S310 TYP. CONTRACTOR SHALL SIZE THE ANCHOR BOLTS PER SPECIFICATION AND SUBMIT FOR ENGINEERS REVIEW. ANCHOR BOLTS SHALL BE CAST INTO THE PUMP BASE. DRILLED ANCHOR BOLTS ARE NOT ACCEPTABLE. SOLE PLATE SHALL BE PROVIDED BY THE PUMP MFR.
4. ROUTE ARV DRAIN PIPING IN A 1/2" GSP TO WETWELL AS SHOWN.
5. CONTRACTOR SHALL INSTALL 18" DEPEND-O-LOCK WITH PIPE RING FULLY BEARING ON THE SHOULDER OF THE COUPLING PRIOR TO PRESSURIZING THE 18" PIPE. THE PIPE RING SHALL BE INSTALLED AT THE PIPES MANUFACTURER'S SHOP. FIELD INSTALLATION OF THE PIPE RING IS NOT ALLOWED.
6. CONTRACTOR SHALL INSTALL 2" WSP AND 2" BALL VALVE. TERMINATE PIPE 8" BELOW 18" PIPE.

PRESSURE GAUGE SCHEDULE

MARK 1

TAG NO:	PI 2920, 2921, 2922 AND 2923
SERVICE:	WATER
GAUGE TYPE:	DIAPHRAGM
ASSEMBLY DETAIL:	SEE M294 TYP
RANGE:	0 TO 160 PSI

C PSM-1 SECTION
SCALE: 3/8" = 1'-0"
FILE: M-01M200

REV	DATE	BY	DESCRIPTION
			RECORD DRAWINGS

DESIGNED DGB
DRAWN JCI/DST
CHECKED DT
DATE MAY 2012

DISCIPLINE ENGINEER: ** ORIGINAL SEALED BY MICHAEL J. HARTLAUB 12/07/11 C74901 **
PROJECT ENGINEER: ** ORIGINAL SEALED BY DARREN G. BAUNE 12/07/11 C68899 **
VICE PRESIDENT: ** ORIGINAL SEALED BY MICHAEL J. BRITTEN 12/07/11 C27729 **

carollo

CITY OF TURLOCK INC. 1908
STANISLAUS COUNTY, CALIFORNIA

HARDING DRAIN BYPASS
PUMP STATION AND PIPELINE
MECHANICAL
OUTFALL PUMP STATION SECTION

VERIFY SCALES
BAR IS ONE INCH ON ORIGINAL DRAWING
0 1"
IF NOT ONE INCH ON THIS SHEET, ADJUST SCALES ACCORDINGLY

JOB NO. 6918B.10
DRAWING NO. PSM-2
SHEET NO. 62 OF 107

FILENAME: C:\pw_working\projectwise\alaico\dms60462\M-01M002 8-26-14 08:45am ALaico XREFS: G-BDR; M-01M200; FHF; FURNACE; S-01S200; Mjb; BEH; CA-MJB; CA-DGB; CA-MJH; CA-AEB; CA-GRS; CA-KAM; CA-ALM; CA-ALM_11-30-11; CA-DGB_11-30-11; CA-MJB_11-30-11 Turlock_City_LogoPMS_FNL; Untitled-1; Furnace;

Last Saved By: ALaico 6-24-14 09:56am

NOTE:

1. SLOPE DRAIN MIN 3% TO WETWELL

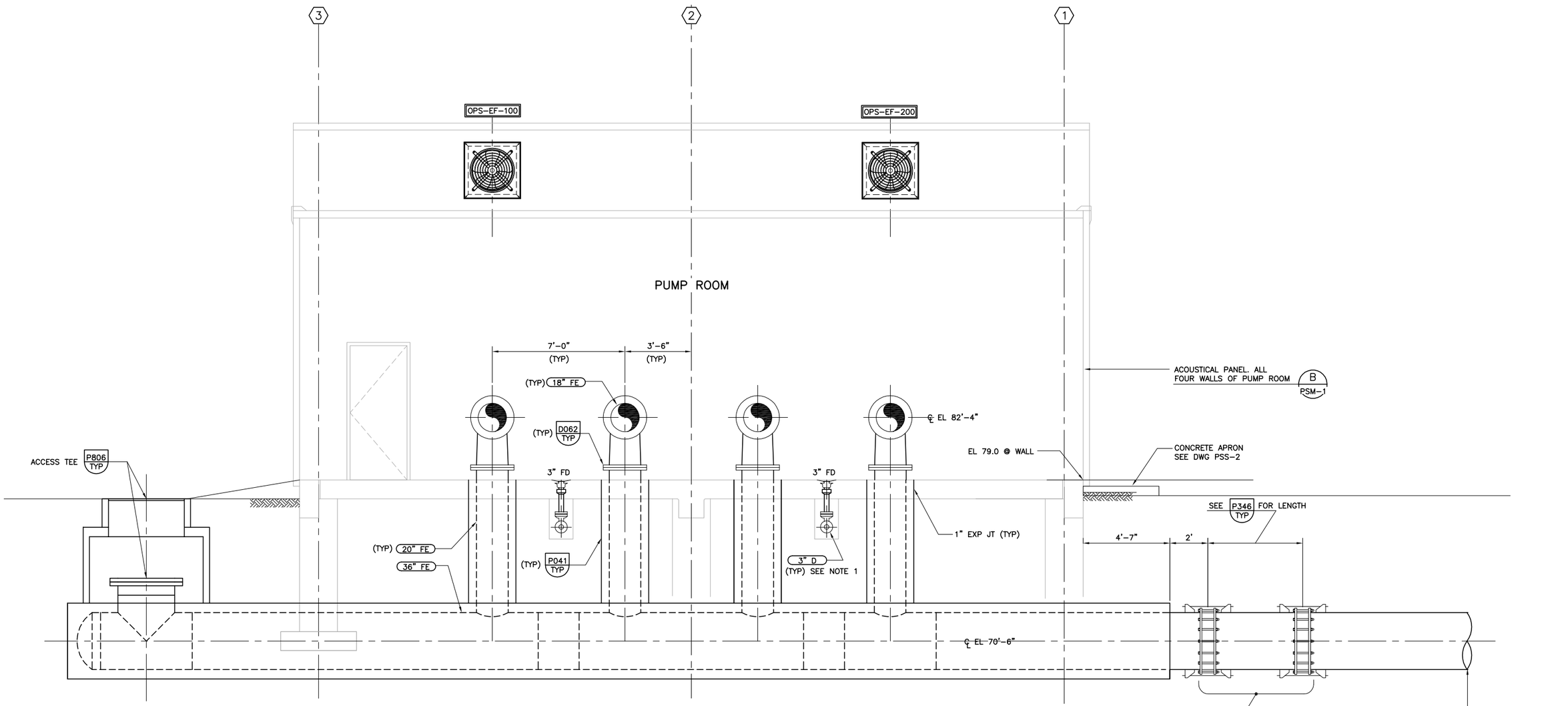

D PSM-1 SECTION
SCALE: 3/8" = 1'-0"
FILE: M-01M300

REV	DATE	BY	DESCRIPTION

RECORD DRAWINGS

DESIGNED FHF/JCI
DRAWN JCI/RC
CHECKED DT
DATE MAY 2012

DISCIPLINE ENGINEER: ** ORIGINAL SEALED BY MICHAEL J. HARTLAUB 12/07/11 C74901 **

PROJECT ENGINEER: ** ORIGINAL SEALED BY DARREN G. BAUNE 12/07/11 C68899 **

VICE PRESIDENT: ** ORIGINAL SEALED BY MICHAEL J. BRITTEN 12/07/11 C27729 **

carollo

CITY OF TURLOCK INC. 1908
STANISLAUS COUNTY, CALIFORNIA

HARDING DRAIN BYPASS
PUMP STATION AND PIPELINE
MECHANICAL
OUTFALL PUMP STATION
SECTION

VERIFY SCALES
BAR IS ONE INCH ON ORIGINAL DRAWING
0 1"
IF NOT ONE INCH ON THIS SHEET, ADJUST SCALES ACCORDINGLY

JOB NO. 6918B.10
DRAWING NO. PSM-3
SHEET NO. 63 OF 107

FILENAME: C:\pw_working\projectwise\alaico\dms60462\M-01M003 8-26-14 08:45am ALaico XREFS: G-BDR; M-01M300; FHF; FURNACE; Mjb; BEH; CA-MJB; CA-DGB; CA-MJH; CA-AEB; CA-GRS; CA-KAM; CA-ALM; CA-ALM_11-30-11; CA-DGB_11-30-11; CA-MJB_11-30-11 Turlck_City_LogoPMS_FNL; Untitled-1; Furnace;

Last Saved By: ALaico 5-27-14 11:19am

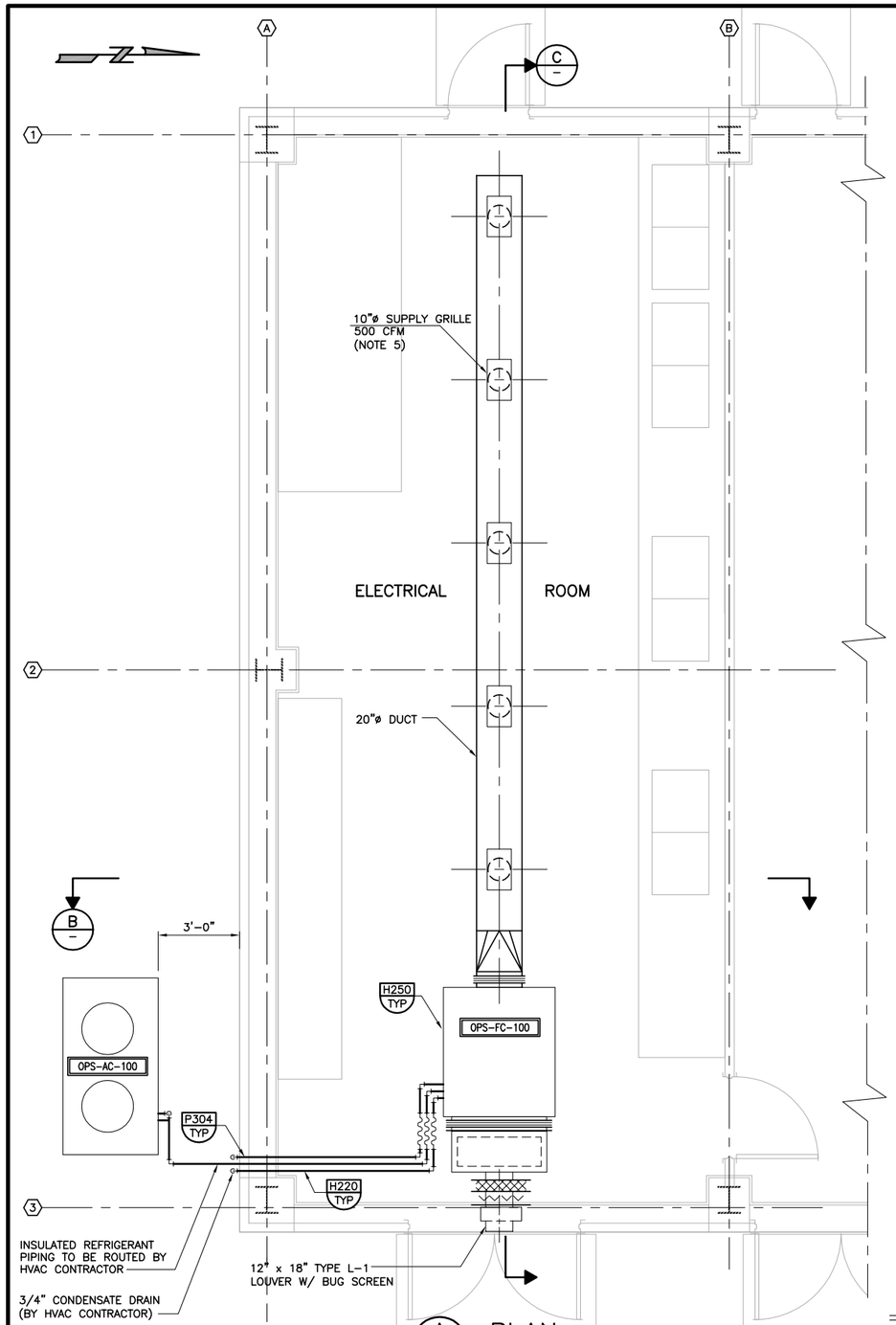

A PLAN
SCALE: 3/8" = 1'-0"
FILE: M-01M400

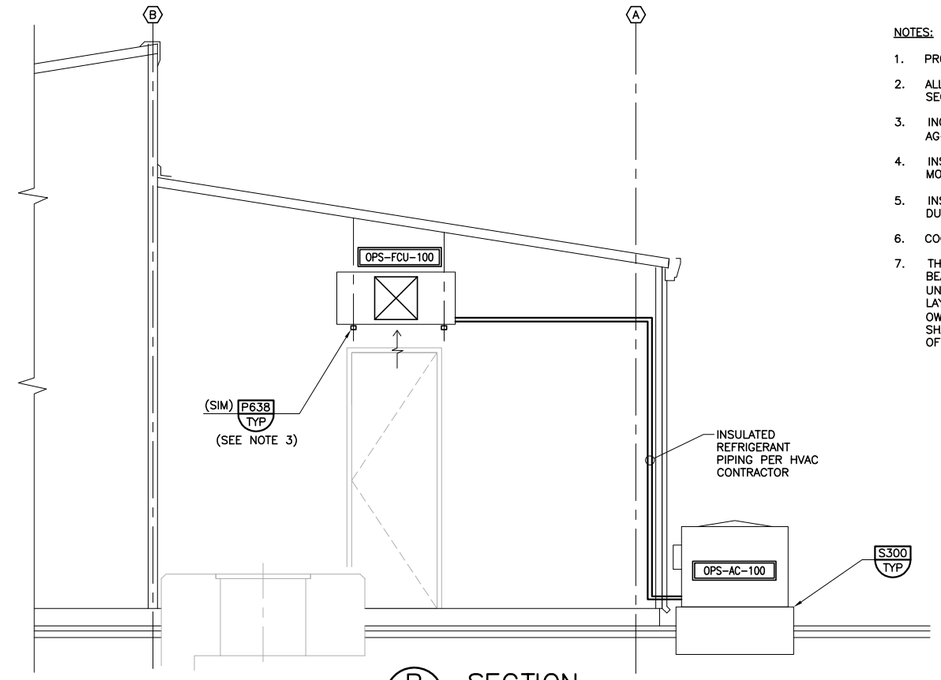

B SECTION
SCALE: 3/8" = 1'-0"
FILE: M-01M402

NOTES:

1. PROVIDE DUCT SUPPORT. EVERY 4'-0" O.C.
2. ALL SUPPLY AND RETURN DUCTS SHALL BE INSULATED. SEE SPECIFICATION SECTION 15084.
3. INCLUDE OPPOSED BLADE DAMPERS FOR AIR BALANCING, TITUS MODEL AG-15-AA (ALUMINUM), OR EQUAL.
4. INSTALL SUPPLY GRILLE WITH ADJUSTABLE DISCHARGE PATTERN, TITUS MODEL FR-2, OR EQUAL.
5. INSTALL 2" PRE-FILTER IN MAKE-UP AIR DUCT, AM AIR MODEL 5700 HEAVY DUTY FILTER, OR EQUAL.
6. COORDINATE WITH STEEL BUILDING MANUFACTURER FOR SUPPORT BEAM LOCATION.
7. THE METAL BUILDING MANUFACTURER SHALL INCLUDE ADDITIONAL STEEL BEAMS AND SUPPORTS IN ITS ROOF DESIGN TO SUPPORT THE FAN COIL UNIT (FCU) AND THE HVAC DUCTING. THE MANUFACTURER SHALL SUBMIT LAYOUT AND DETAILS DRAWINGS AS WELL AS CALCULATIONS FOR THE OWNER'S REVIEW PRIOR TO FABRICATION. THE DRAWINGS AND CALCULATIONS SHALL BE STAMPED BY A STRUCTURAL ENGINEER REGISTERED IN THE STATE OF CALIFORNIA. REFER TO SPECIFICATION FOR SEISMIC DESIGN REQUIREMENTS.

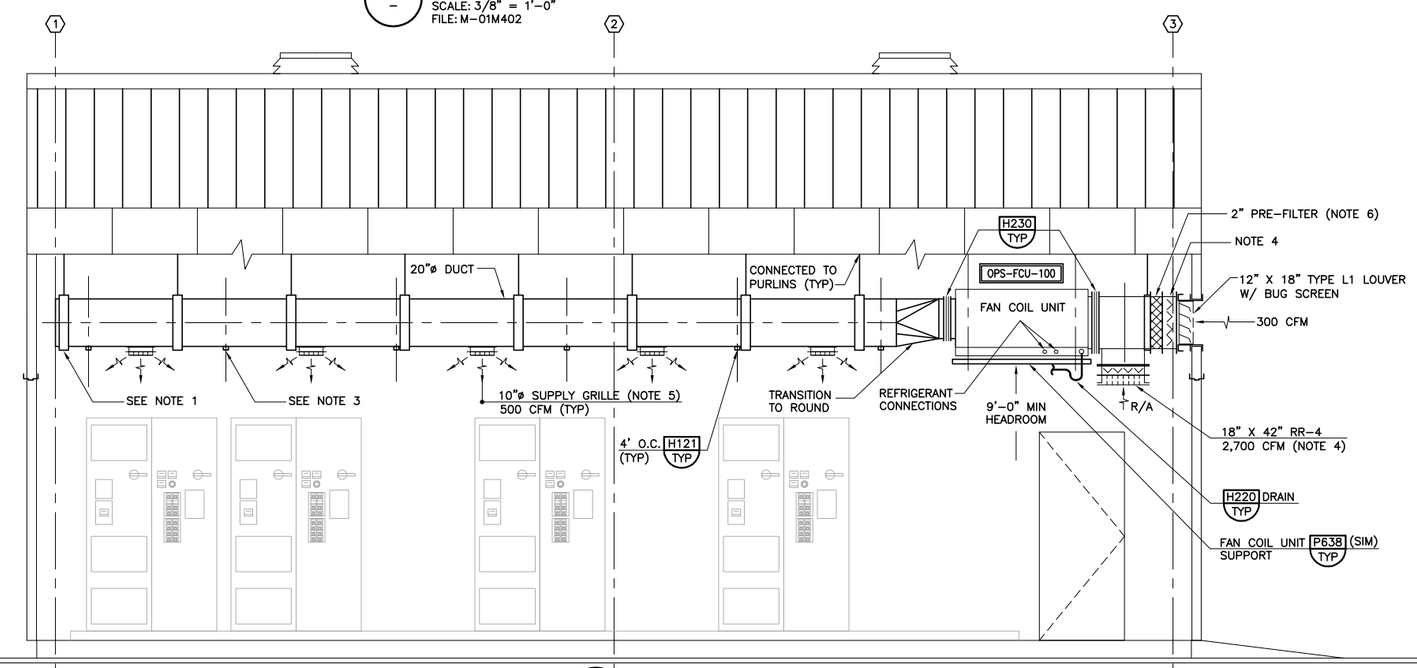

C SECTION
SCALE: 3/8" = 1'-0"
FILE: M-01M402

REV	DATE	BY	DESCRIPTION

RECORD DRAWINGS

DESIGNED FHF/JCI
DRAWN JCI/DAS
CHECKED DT
DATE MAY 2012

DISCIPLINE ENGINEER: ** ORIGINAL SEALED BY MICHAEL J. HARTLAUB 12/07/11 C74901 **
PROJECT ENGINEER: ** ORIGINAL SEALED BY DARREN G. BAUNE 12/07/11 C68899 **
VICE PRESIDENT: ** ORIGINAL SEALED BY MICHAEL J. BRITTEN 12/07/11 C27729 **

carollo

CITY OF TURLOCK INC. 1908
STANISLAUS COUNTY, CALIFORNIA

HARDING DRAIN BYPASS
PUMP STATION AND PIPELINE
MECHANICAL
OUTFALL PUMP STATION
HVAC PLAN AND SECTIONS

VERIFY SCALES
BAR IS ONE INCH ON ORIGINAL DRAWING
0 1"
IF NOT ONE INCH ON THIS SHEET, ADJUST SCALES ACCORDINGLY

JOB NO. 6918B.10
DRAWING NO. PSM-4
SHEET NO. 64 OF 107

FILENAME: C:\pw_working\projectwise\alaico\dms60462\M-01M004 8-26-14 08:46am ALaico XREFS: G-BDR; M-01M400; S-01S101; M-01M402; FHF; FURNACE; Mjb; BEH; CA-MJB; CA-DGB; CA-MJH; CA-AEB; CA-GRS; CA-KAM; CA-ALM; CA-ALM_11-30-11; CA-DGB_11-30-11; CA-MJB_11-30-11 Turlock_City_LogoPMS_FNL; Untitled-1; Untitled-1;

Last Saved By: ALaico 6-23-14 10:56am

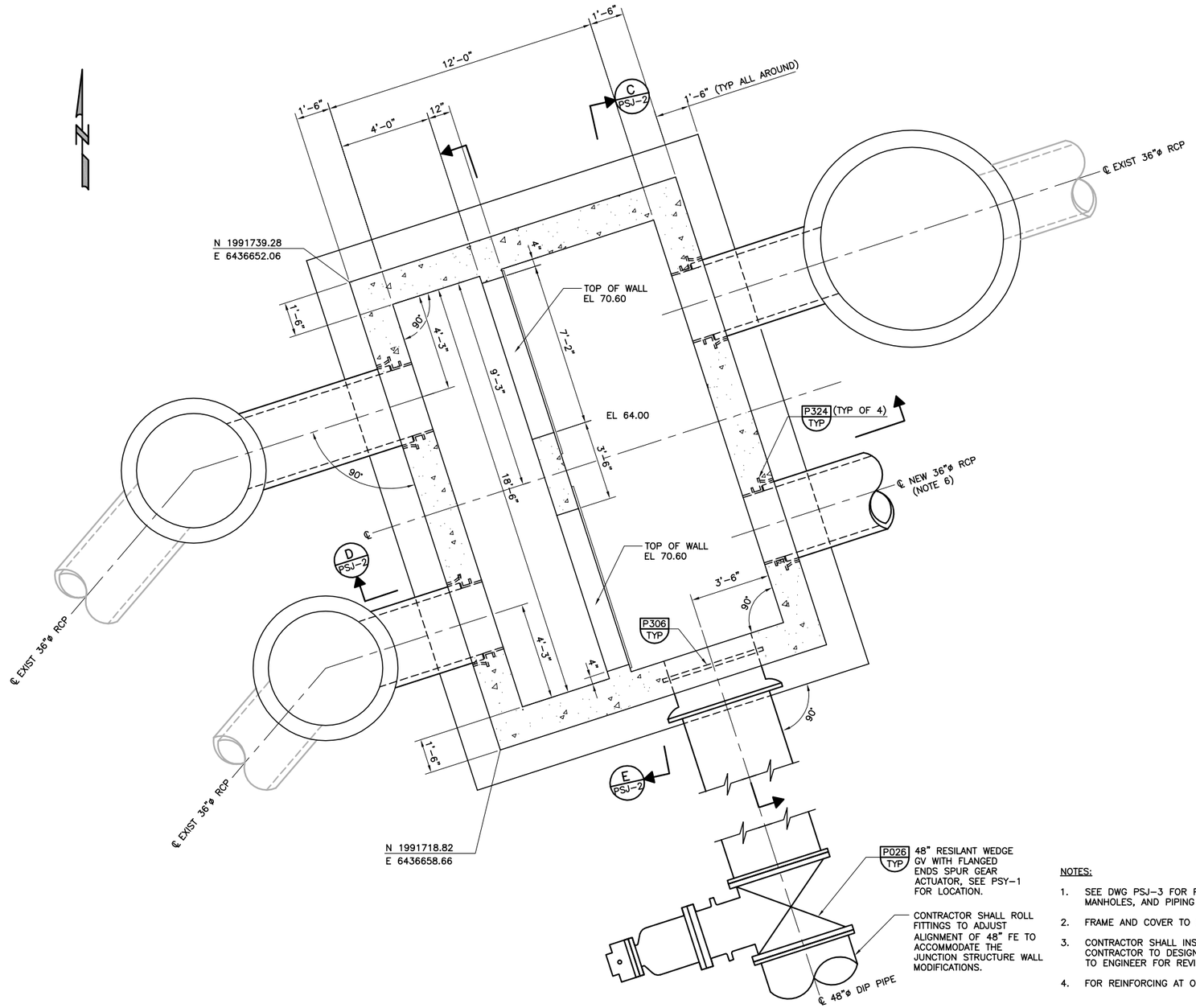

A – BOTTOM PLAN
SCALE: 3/8" = 1'-0"
FILE: Y-01Y100

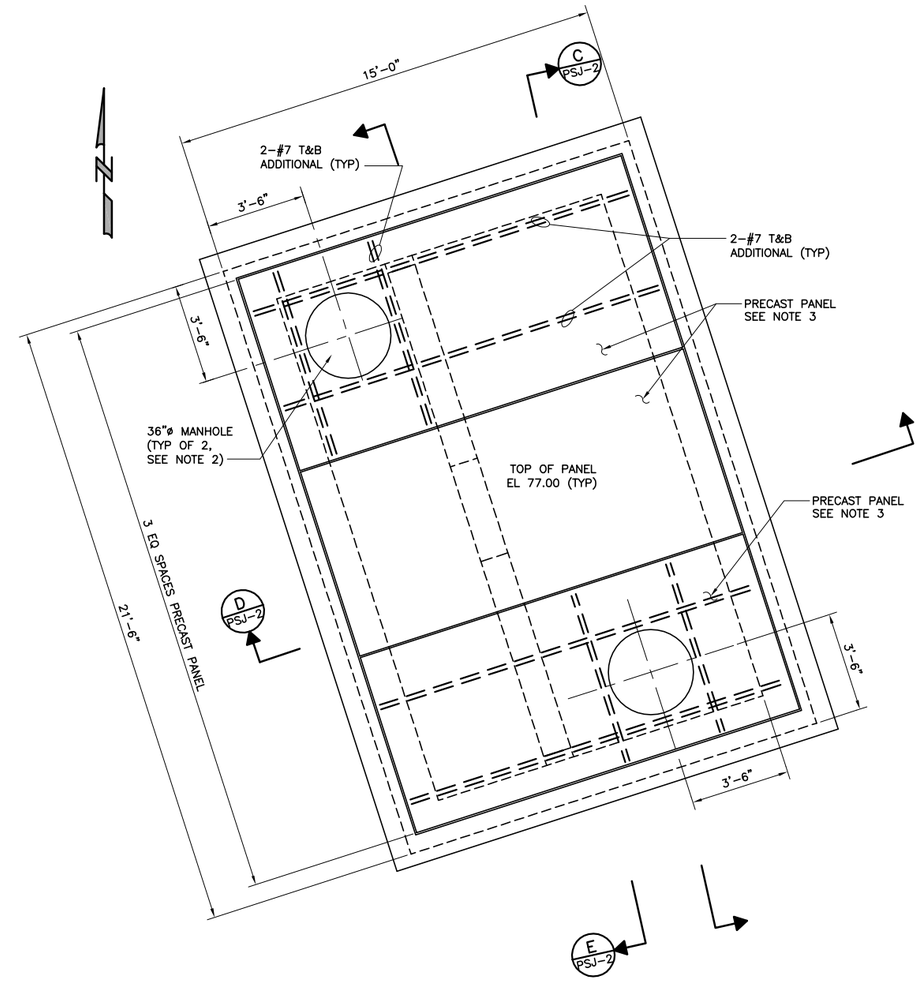

NOTE:

1. DESIGN LIVE LOAD = H20 LOADING

B – TOP PLAN
SCALE: 3/8" = 1'-0"
FILE: Y-01YS101

NOTES:

1. SEE DWG PSJ-3 FOR PROPOSED CONSTRUCTION SEQUENCE, BYPASS MANHOLES, AND PIPING DETAILS.
2. FRAME AND COVER TO BE DESIGNED BY MFR FOR H20 LOADING.
3. CONTRACTOR SHALL INSTALL FOUR RECESSED LIFTING POINTS PER PANEL. CONTRACTOR TO DESIGN THE PRECAST PANEL LIFTING POINTS AND SUBMIT TO ENGINEER FOR REVIEW.
4. FOR REINFORCING AT OPENINGS, SEE S180 TYP .
5. DESIGN LIVE LOAD = H20 LOADING.
6. USE (ATTACHED) FIELD CLOSURE APPROX 8 FEET EAST OF STRUCTURE.
7. FOR GATE VALVE SUPPORT DETAIL SEE P026 TYP .

Beyaz & Patel, Inc.
Consulting Engineers
W0415 Walnut Creek, California

RECORD DRAWINGS

REV	DATE	BY	DESCRIPTION

DESIGNED B. LOW
DRAWN E. POSADAS
CHECKED C. PAO
DATE MAY 2012

DISCIPLINE ENGINEER: ** ORIGINAL SEALED BY GARRY HO 12/07/11 S2534 **
PROJECT ENGINEER: ** ORIGINAL SEALED BY DARREN G. BAUNE 12/07/11 C68899 **
VICE PRESIDENT: ** ORIGINAL SEALED BY MICHAEL J. BRITTEN 12/07/11 C27729 **

carollo

CITY OF TURLOCK INC. 1908
STANISLAUS COUNTY, CALIFORNIA

HARDING DRAIN BYPASS
PUMP STATION AND PIPELINE
STRUCTURAL
JUNCTION STRUCTURE PLANS

VERIFY SCALES
BAR IS ONE INCH ON ORIGINAL DRAWING
0 1"
IF NOT ONE INCH ON THIS SHEET, ADJUST SCALES ACCORDINGLY

JOB NO. 6918B.10
DRAWING NO. PSJ-1
SHEET NO. 65 OF 107

Last Saved By: ALaico 5-28-14 01:26pm

FILENAME: C:\pw_working\projectwise\alaico\dms60461\Y-01Y002 8-26-14 08:46am ALaico XREFS: G-BDR; Y-01Y100; Y-01Y101; Mjb; BEH; CA-MJB; CA-DGB; CA-MJH; CA-AEB; CA-GRS; CA-KAM; CA-ALM; CA-ALM_11-30-11; CA-DGB_11-30-11; CA-MJB_11-30-11 Turlock_City_LogoPMS_FNL;

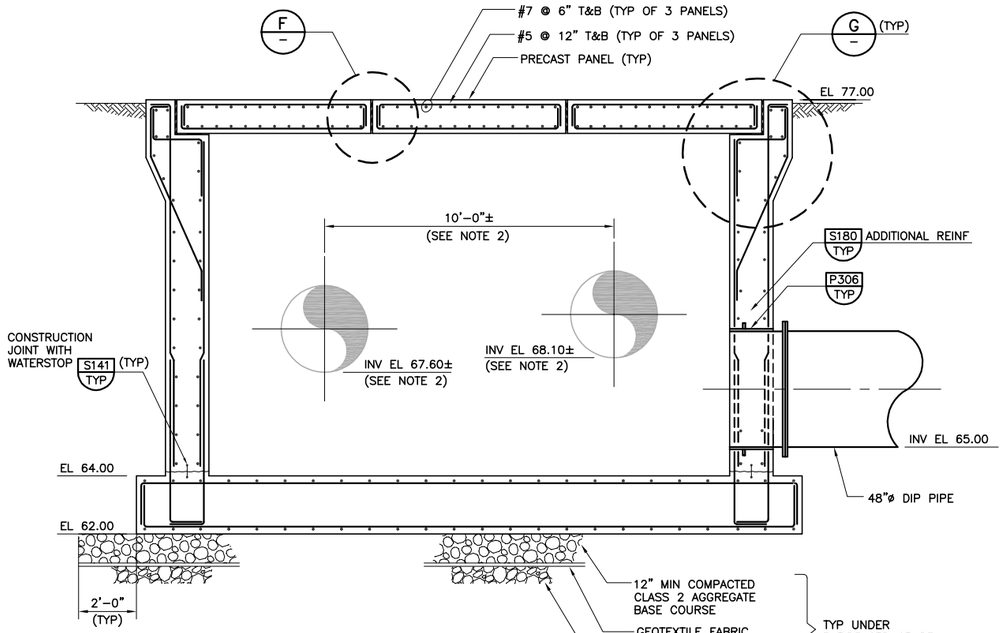

C PSJ-1 SECTION
SCALE: 3/8" = 1'-0"
FILE: Y-01Y200

NOTES:

1. WEIR PLATE TO BE MADE FROM 1/4 IN THICK TYPE 304 SST PLATE.
2. CONTRACTOR TO FIELD VERIFY LOCATION OF EXISTING 36"ø RCP PIPES AND NOTIFY THE ENGINEER 2 WEEKS PRIOR TO STARTING WORK ON SITE.

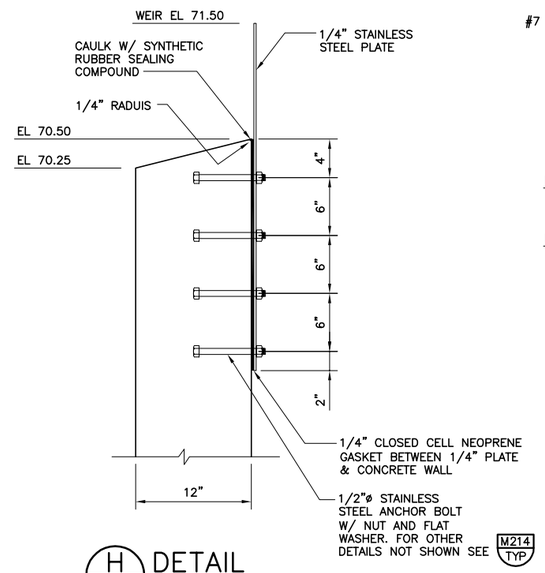

H DETAIL
SCALE: 1 1/2" = 1'-0"
FILE: Y-01Y205

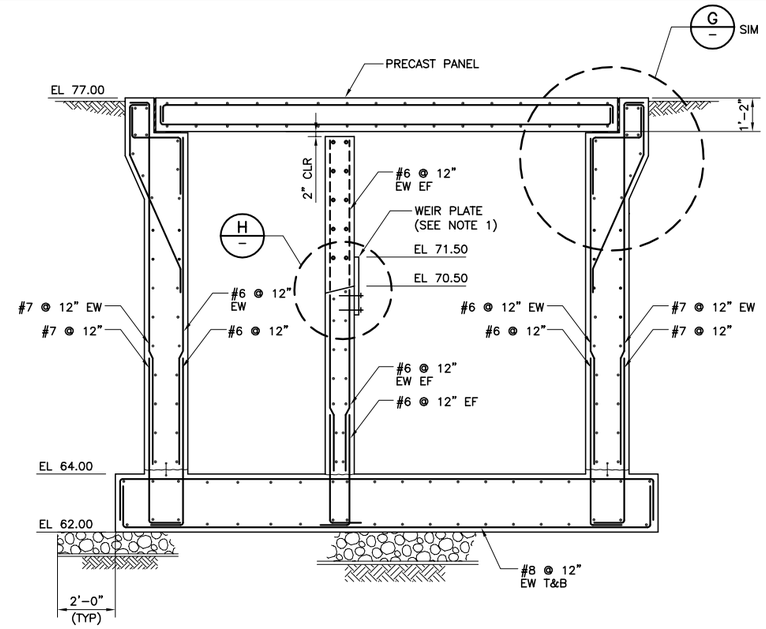

D PSJ-1 SECTION
SCALE: 3/8" = 1'-0"
FILE: Y-01Y201

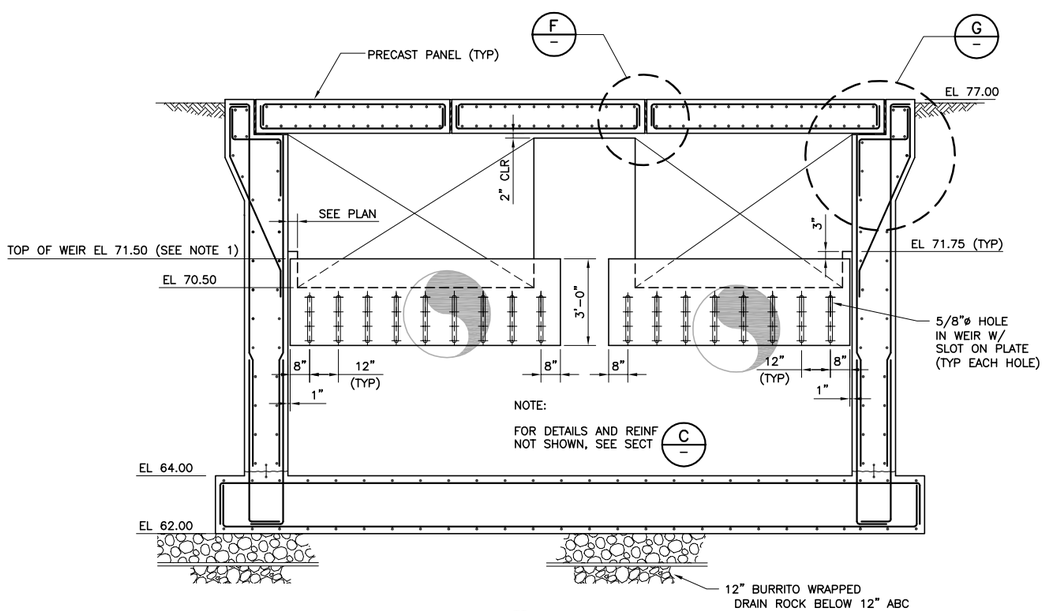

E PSJ-1 SECTION
SCALE: 3/8" = 1'-0"
FILE: Y-01Y202

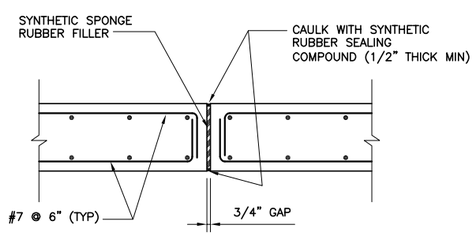

F SECTION
SCALE: 3/4" = 1'-0"
FILE: Y-01Y204

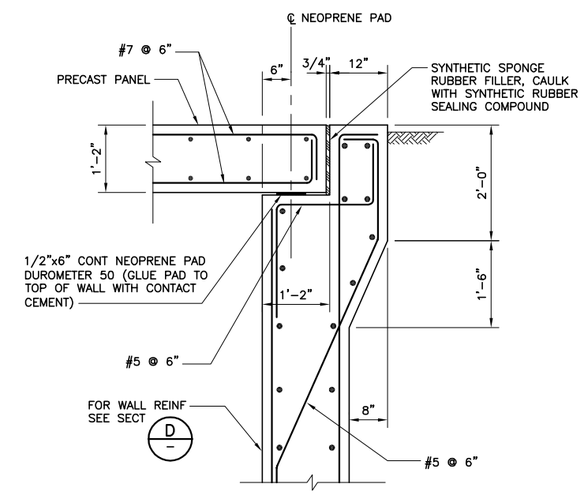

G SECTION
SCALE: 3/4" = 1'-0"
FILE: Y-01Y203

REV	DATE	BY	DESCRIPTION

RECORD DRAWINGS

DESIGNED B. LOW
DRAWN E. POSADAS
CHECKED C. PAO
DATE MAY 2012

DISCIPLINE ENGINEER: ** ORIGINAL SEALED BY GARRY HO 12/07/11 S2534 **

PROJECT ENGINEER: ** ORIGINAL SEALED BY DARREN G. BAUNE 12/07/11 C68899 **

VICE PRESIDENT: ** ORIGINAL SEALED BY MICHAEL J. BRITTEN 12/07/11 C27729 **

carollo

CITY OF TURLOCK INC. 1908 — 1908-2008 CENTENNIAL
STANISLAUS COUNTY, CALIFORNIA

HARDING DRAIN BYPASS
PUMP STATION AND PIPELINE
STRUCTURAL
JUNCTION STRUCTURE SECTIONS AND DETAILS

VERIFY SCALES
BAR IS ONE INCH ON ORIGINAL DRAWING
0 1"
IF NOT ONE INCH ON THIS SHEET, ADJUST SCALES ACCORDINGLY

JOB NO. 6918B.10
DRAWING NO. PSJ-2
SHEET NO. 66 OF 107

Last Saved By: Alaico 8-26-14 08:47am

FILENAME: C:\pw_working\projectwise\alaico\dms60461\Y-01Y003 8-26-14 08:47am ALaico XREFS: G-BDR; Y-01Y200; Y-01Y201; Y-01Y202; Y-01Y203; Y-01Y204; Y-01Y205; Mjb; BEH; CA-MJB; CA-DGB; CA-MJH; CA-AEB; CA-GRS; CA-KAM; CA-ALM; CA-ALM_11-30-11; CA-DGB_11-30-11; CA-MJB_11-30-11 TurlockLogo; Turlck_City_LogoPMS_FNL;

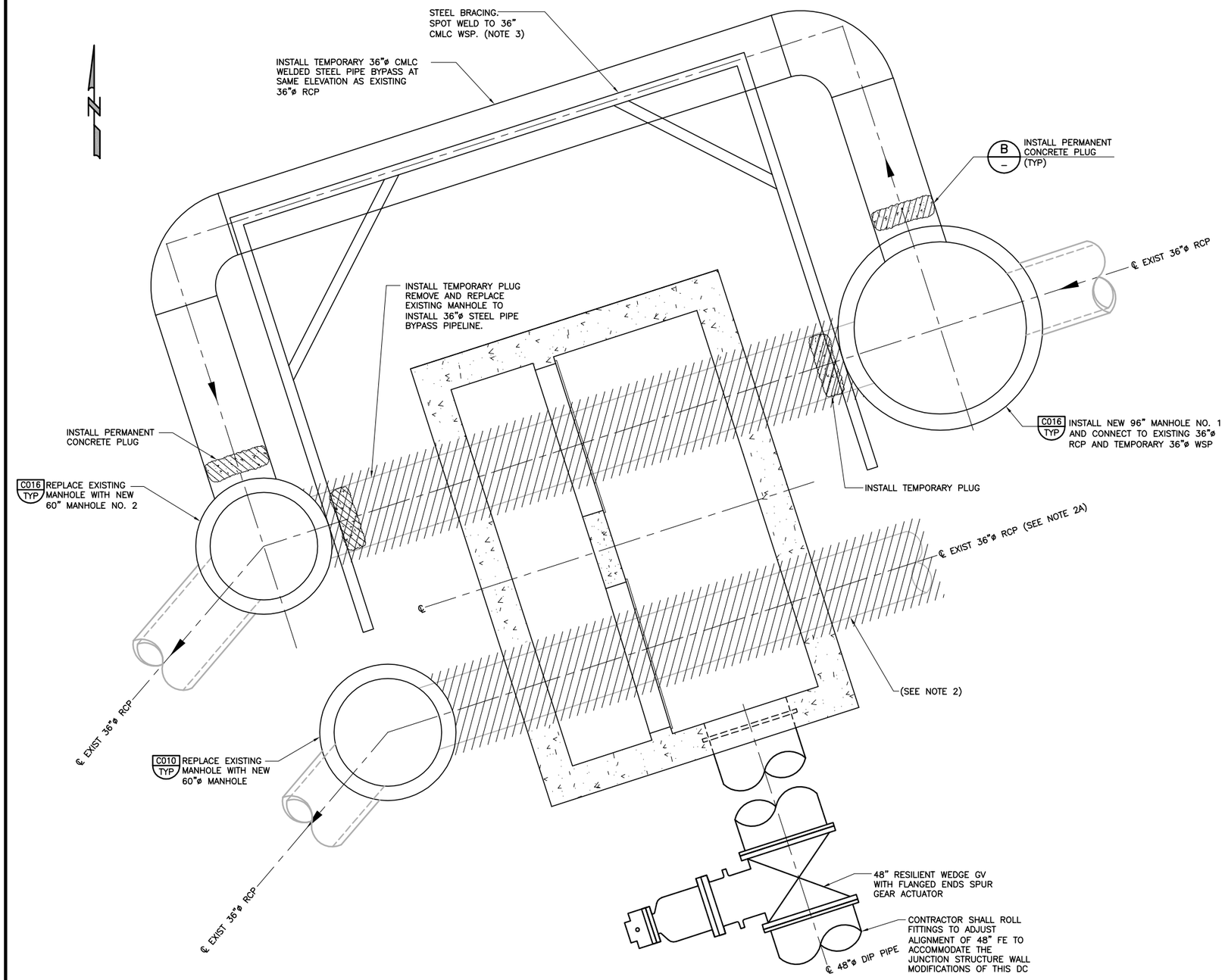

A
–
PROPOSED CONSTRUCTION SEQUENCE
SCALE: 3/8" = 1'-0"
FILE: Y-01Y102

NOTES FOR CONSTRUCTION SEQUENCE:

1. CONSTRUCTION SEQUENCE IS TO BE USED AS A GUIDE, CONTRACTOR IS RESPONSIBLE FOR SUPPLYING ALL NECESSARY EQUIPMENT AND INFRASTRUCTURE AS WELL AS PREPARING A PLAN FOR SEQUENCE OF CONSTRUCTION. ALL SHUTDOWNS AND TIE-INS SHALL BE IN COMPLIANCE WITH SPECIFICATION SECTION 01140. ALL WORK MUST BE DONE IN THE DRY SEASON, FROM MAY 1 – OCTOBER 1.

2. INSTALLATION OF JUNCTION BYPASS AND CONSTRUCTION OF JUNCTION STRUCTURE:
   A. FIELD VERIFY LOCATION OF THE PROPOSED JUNCTION STRUCTURE BASED ON THE LOCATION OF THE EXISTING 36 INCH DIAMETER RCP OUTFALL PIPELINES. SUBMIT LOCATION, ELEVATION AND OUTER DIAMETER TO THE ENGINEER FOR REVIEW. SUBMIT LOCATION AND LAYOUT TO THE ENGINEER FOR APPROVAL.
   B. COORDINATE WITH THE CITY TO DIVERT ALL FLOW FROM THE WQCF TO THE SOUTH 36" OUTFALL PIPE.
   C. CONSTRUCT THE FOLLOWING: MANHOLE NO. 1, THE 36 INCH BYPASS LINE, AND MANHOLE NO. 2.
   D. INSTALL TEMPORARY PLUGS IN MANHOLES NO. 1 AND 2.
   E. INSTALL STEEL FRAME BRACING ON MANHOLES 1 AND 2, AND THE BYPASS LINE.
   F. COORDINATE WITH THE CITY TO DIVERT ALL FLOW FROM THE WQCF TO THE NORTH LINE.
   G. CONSTRUCT NEW JUNCTION STRUCTURE, 36" RCP PIPE CONNECTIONS, AND THE NEW 48" OUTFALL PIPE (FIRST PIPE LENGTH).
   H. COORDINATE WITH THE CITY TO DIVERT ALL WQCF FLOW TO THE SOUTH OUTFALL PIPE.
   I. REMOVE TEMPORARY PIPE PLUGS IN MANHOLES 1 AND 2 TO ALLOW FLOW TO PASS THROUGH TO THE JUNCTION STRUCTURE. INSTALL PERMANENT PIPE PLUGS ON THE BYPASS LINE.
   J. CLOSE THE SLUICE GATE ON THE 48" OUTFALL PIPE.
   K. COORDINATE WITH THE CITY TO DIVERT ALL WQCF FLOW TO THE NORTH AND SOUTH OUTFALL PIPES. AT THIS TIME, THE FLOW WILL OVERFLOW THE WEIRS AND DISCHARGE TO THE HARDING DRAIN.
   L. WHEN THE OUTFALL PUMP STATION IS OPERATIONAL, OPEN THE 48" GATE VALVE AND PLACE THE JUNCTION STRUCTURE AND OUTFALL PUMP STATION IN SERVICE. FLOW WILL STOP OVERFLOWING TO HARDING DRAIN.

3. INSTALL STEEL FRAME SUPPORT. DESIGN TO BE PREPARED BY CONTRACTOR FOR REVIEW BY ENGINEER. IT IS NOT ACCEPTABLE TO CONNECT THE TEMPORARY BRACE TO THE MANHOLE STRUCTURE.

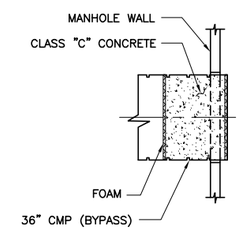

B
–
PERMANENT PLUG
SCALE: 3/8" = 1'-0"
FILE: Y-01Y102

B&P Beyaz & Patel, Inc.
Consulting Engineers
W0415 Walnut Creek, California

REV	DATE	BY	DESCRIPTION
			RECORD DRAWINGS

DESIGNED B. LOW
DRAWN E. POSADAS
CHECKED C. PAO
DATE MAY 2012

DISCIPLINE ENGINEER: ** ORIGINAL SEALED BY GARRY HO 12/07/11 S2534 **
PROJECT ENGINEER: ** ORIGINAL SEALED BY DARREN G. BAUNE 12/07/11 C68899 **
VICE PRESIDENT: ** ORIGINAL SEALED BY MICHAEL J. BRITTEN 12/07/11 C27729 **

carollo

CITY OF TURLOCK INC. 1908
STANISLAUS COUNTY, CALIFORNIA

HARDING DRAIN BYPASS
PUMP STATION AND PIPELINE
STRUCTURAL
JUNCTION STRUCTURE
PROPOSED CONSTRUCTION SEQUENCE

VERIFY SCALES
BAR IS ONE INCH ON ORIGINAL DRAWING
0 1"
IF NOT ONE INCH ON THIS SHEET, ADJUST SCALES ACCORDINGLY

JOB NO. 6918B.10
DRAWING NO. PSJ-3
SHEET NO. 67 OF 107

FILENAME: C:\pw_working\projectwise\alaico\dms60461\Y-01Y004 8-26-14 08:47am ALaico XREFS: G-BDR; Y-01Y102; Mjb; BEH; CA-MJB; CA-DGB; CA-MJH; CA-AEB; CA-GRS; CA-KAM; CA-ALM; CA-ALM_11-30-11; CA-DGB_11-30-11; CA-MJB_11-30-11 Turlck_City_LogoPMS_FNL;
Last Saved By: ALaico 5-27-14 01:30pm

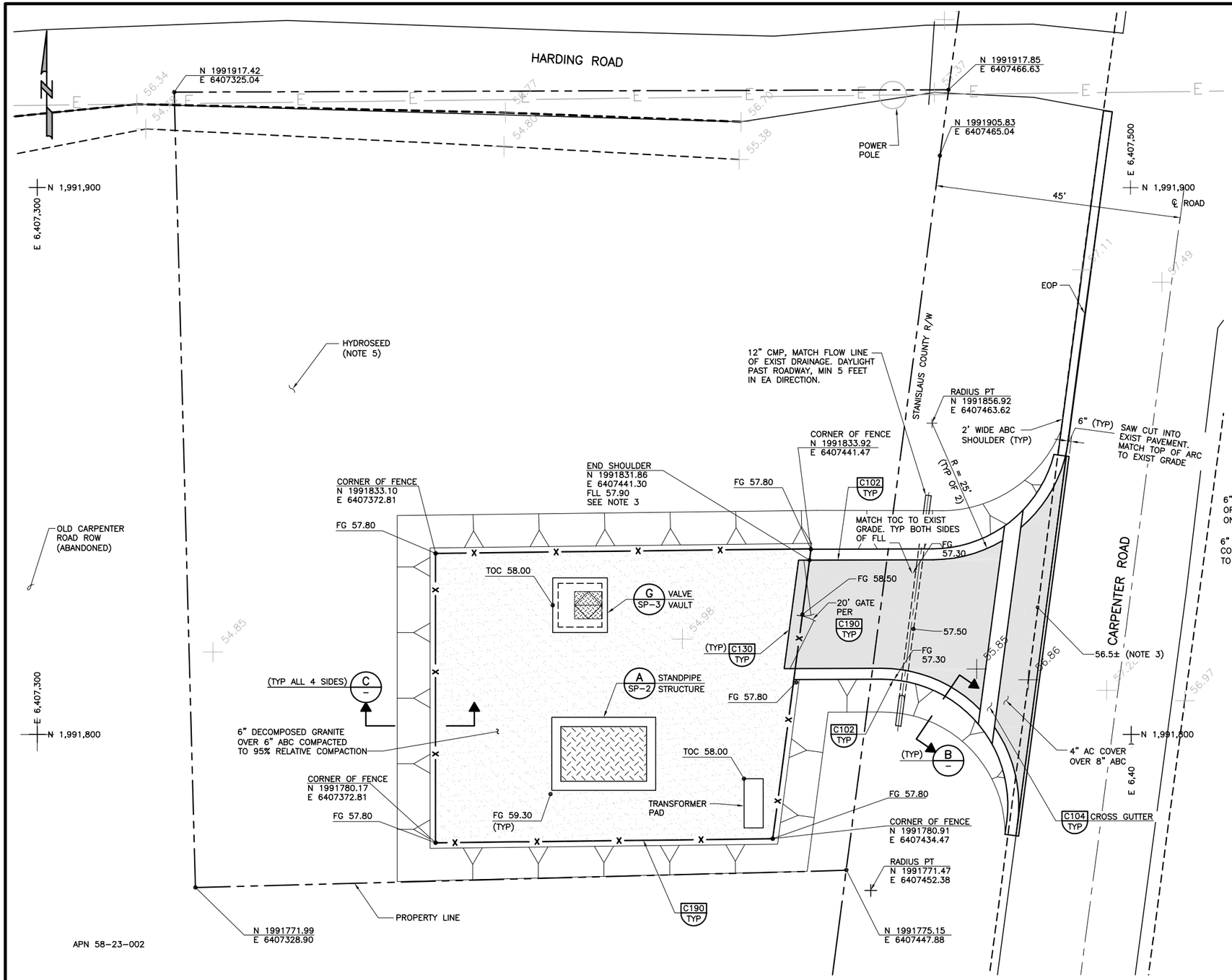

A SITE PLAN
SCALE: 1" = 10'
FILE: C-02C100

NOTES:

1. CONTACT USA (1-800-227-2600) PRIOR TO BEGINNING ANY WORK IN ORDER TO IDENTIFY UTILITIES IN THE WORK AREA WHICH MAY NOT BE SHOWN ON DWGS.
2. REFER TO SHEET P-1 FOR SURROUNDING AREA.
3. MATCH DRIVEWAY TOC TO CURB AND GUTTER FLL ELEVATION.
4. CONTRACTOR TO HYDROSEED ALL UNPAVED OR GRAVELED AREA ON THE PROPERTY. CONTRACTOR TO FILL IN LOW SPOTS WITH CLEAN TOP SOIL. OR FILL AS DIRECTED BY THE ENGINEER.
5. CONTRACTOR MAY UTILIZE THE FULL UNDEVELOPED PROPERTY FOR STAGING DURING CONSTRUCTION.
6. CONTRACTOR SHALL PROVIDE TID ACCESS TO 115KV POWER POLES/LINES AT THE SAN JOAQUIN RIVER LEVEE AT ALL TIMES.

LEGEND

- CONCRETE GUTTER
- AC PAVING (4" AC OVER 8" ABC)
- DECOMPOSED GRANITE
- TREAD PLATE
- CONCRETE
- SWALE
- EDGE OF BERM/RIDGE

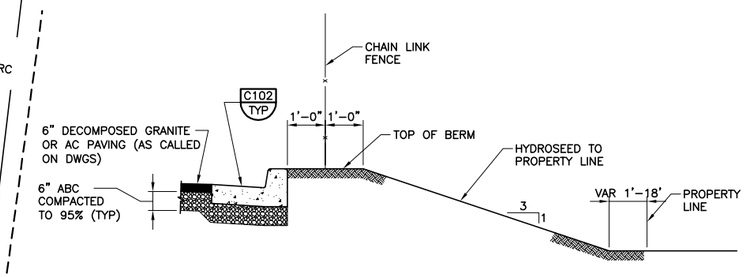

B BERM SECTION – CURB AND GUTTER
SCALE: 1/2" = 1'-0"
FILE: C-02C101

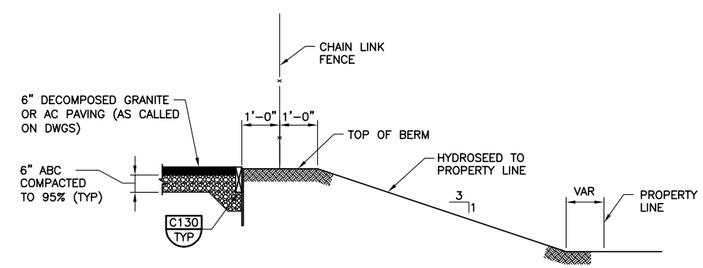

C BERM SECTION – HEADER BOARD
SCALE: 1/2" = 1'-0"
FILE: C-02C102

REV	DATE	BY	DESCRIPTION

RECORD DRAWINGS

DESIGNED
DRAWN JHL
CHECKED
DATE MAY 2012

DISCIPLINE ENGINEER: ** ORIGINAL SEALED BY MICHAEL J. HARTLAUB 12/07/11 C74901 **
PROJECT ENGINEER: ** ORIGINAL SEALED BY DARREN G. BAUNE 12/07/11 C68899 **
VICE PRESIDENT: ** ORIGINAL SEALED BY MICHAEL J. BRITTEN 12/07/11 C27729 **

carollo

CITY OF TURLOCK INC. 1908
STANISLAUS COUNTY, CALIFORNIA

HARDING DRAIN BYPASS
PUMP STATION AND PIPELINE
CIVIL
STANDPIPE STRUCTURE
SITE PLAN AND SECTION

VERIFY SCALES
BAR IS ONE INCH ON ORIGINAL DRAWING
0 1"
IF NOT ONE INCH ON THIS SHEET, ADJUST SCALES ACCORDINGLY

JOB NO. 6918B.10
DRAWING NO. SP-1
SHEET NO. 68 OF 107

FILENAME: C:\pw_working\projectwise\alaico\dms60458\C-02C001 8-26-14 08:48am ALaico XREFS: C-02C100; plan; UTILITY; STUCTURES; C-02C101; 00Y127; C-02C102; Turlock; Outfall_etopo; G-BDR; Mjb; BEH; Y-02Y100; S-02Y100; M-02M202; S-02S101; CA-MJB; CA-DGB; CA-MJH; CA-AEB; CA-GRS; CA-KAM; CA-ALM; CA-ALM_11-30-11; CA-DGB_11-30-11; CA-MJB_11-30-11 Turlck_City_LogoPMS_FNL;

Last Saved By: ALaico 5-28-14 05:21pm

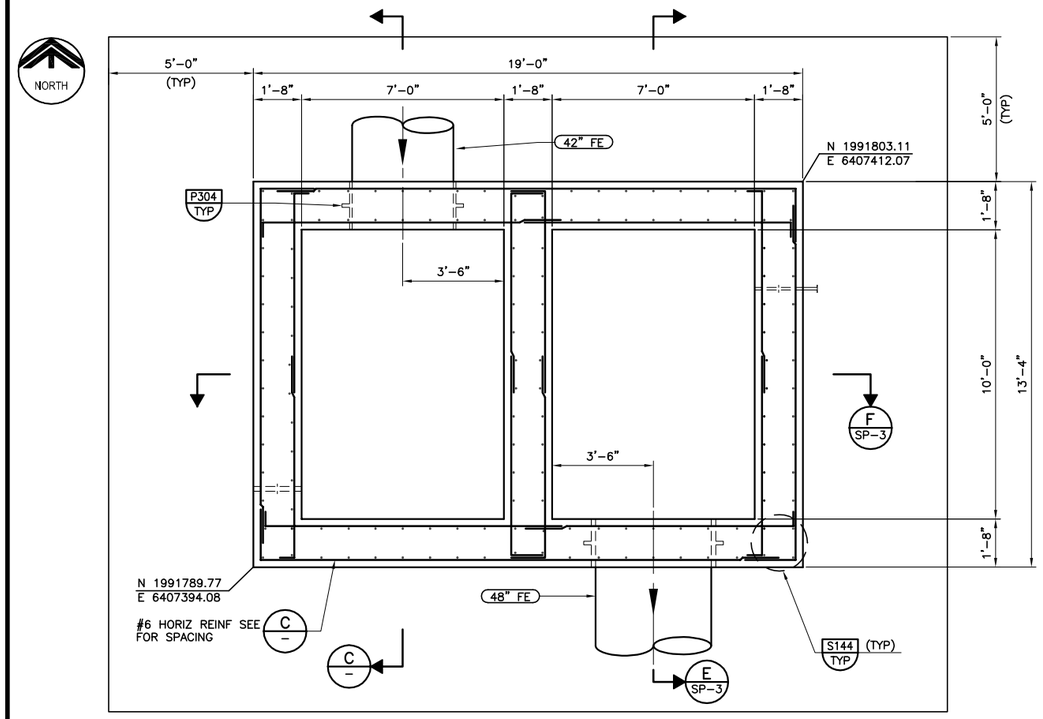

A FOUNDATION PLAN
SP-1
SCALE: 3/8" = 1'-0"
FILE: SFSS213

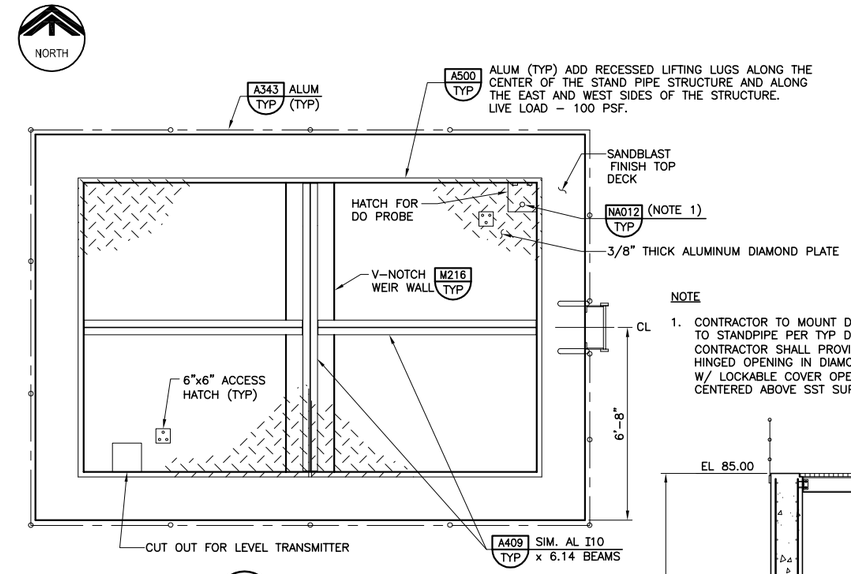

NOTE

1. CONTRACTOR TO MOUNT DO PROBE TO STANDPIPE PER TYP DET NA012. CONTRACTOR SHALL PROVIDE 6"x6" HINGED OPENING IN DIAMOND PLATE W/ LOCKABLE COVER OPENING TO BE CENTERED ABOVE SST SUPPORT PIPE.

B TOP PLAN
–
SCALE: 3/8" = 1'-0"
FILE: SFSS212

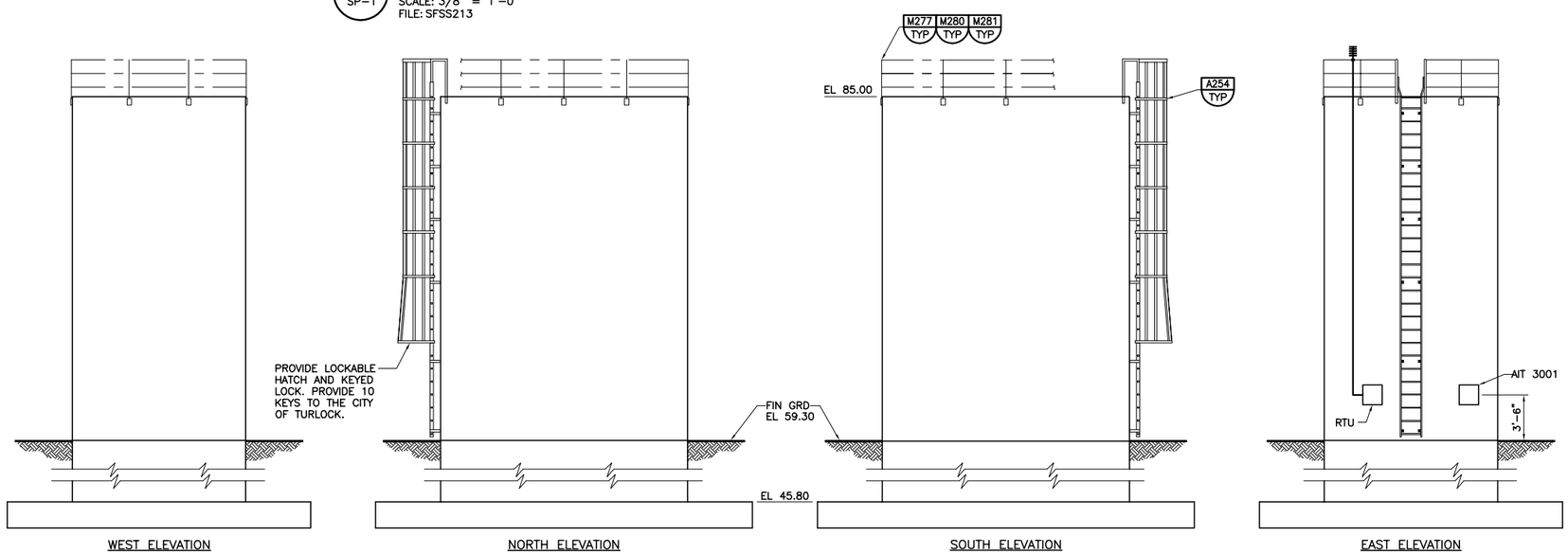

LEGEND:

SMOOTH FINISH

D STANDPIPE STRUCTURE – EXTERIOR ARCHITECTURAL RELIEF
–
SCALE: 1/8"= 1'-0"
FILE: SFSS255

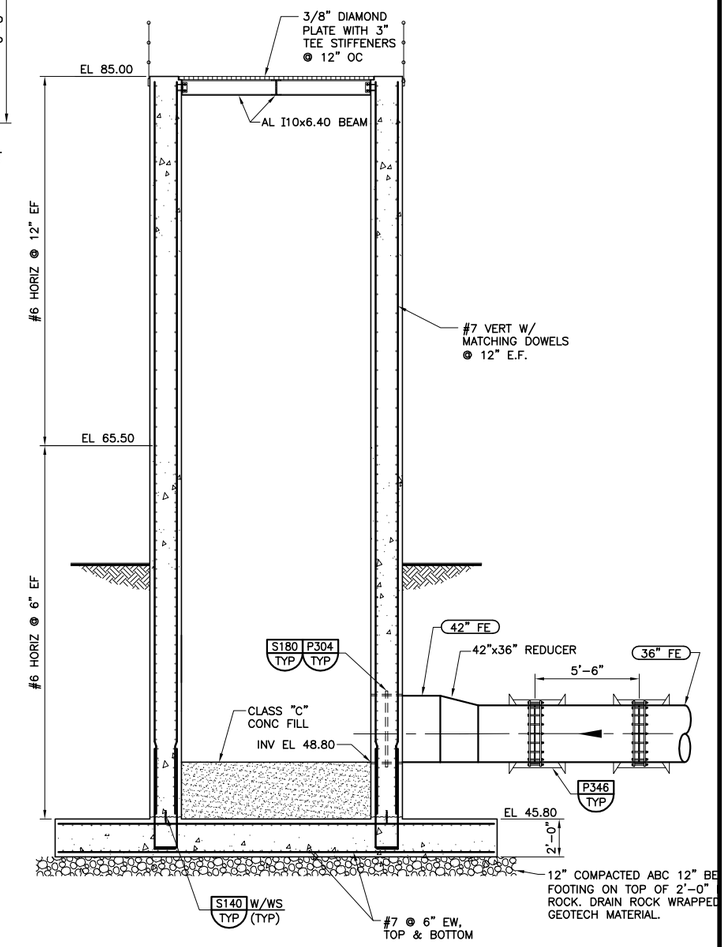

C SECTION
–
SCALE: 1/4" = 1'-0"
FILE: SFSS215

REV	DATE	BY	DESCRIPTION

RECORD DRAWINGS

DESIGNED	MJH
DRAWN	PGG
CHECKED	DGB
DATE	MAY 2012

DISCIPLINE ENGINEER: ** ORIGINAL SEALED BY KIPP A. MARTIN 12/07/11 C45259 **

PROJECT ENGINEER: ** ORIGINAL SEALED BY DARREN G. BAUNE 12/07/11 C68899 **

VICE PRESIDENT: ** ORIGINAL SEALED BY MICHAEL J. BRITTEN 12/07/11 C27729 **

carollo

CITY OF TURLOCK INC. 1908

STANISLAUS COUNTY, CALIFORNIA

HARDING DRAIN BYPASS

PUMP STATION AND PIPELINE

CIVIL

STANDPIPE STRUCTURE
PLANS, SECTION AND ELEVATIONS

VERIFY SCALES
BAR IS ONE INCH ON ORIGINAL DRAWING
0 1"
IF NOT ONE INCH ON THIS SHEET, ADJUST SCALES ACCORDINGLY

JOB NO. 6918B.10

DRAWING NO. SP-2

SHEET NO. 69 OF 107

FILENAME: C:\pw_working\projectwise\alaico\dms60458\C-02C002 8-26-14 08:49am ALaico XREFS: G-BDR; Mjb; BEH; SFSS212; SFSS213; SFSS255; SFSS217; SFSS215; CA-MJB; CA-DGB; CA-MJH; CA-AEB; CA-GRS; CA-KAM; CA-MED-S; CA-ALM; CA-ALM_11-30-11; CA-DGB_11-30-11; CA-MJB_11-30-11 Turlck_City_LogoPMS_FNL;

Last Saved By: ALaico 6-24-14 10:45am

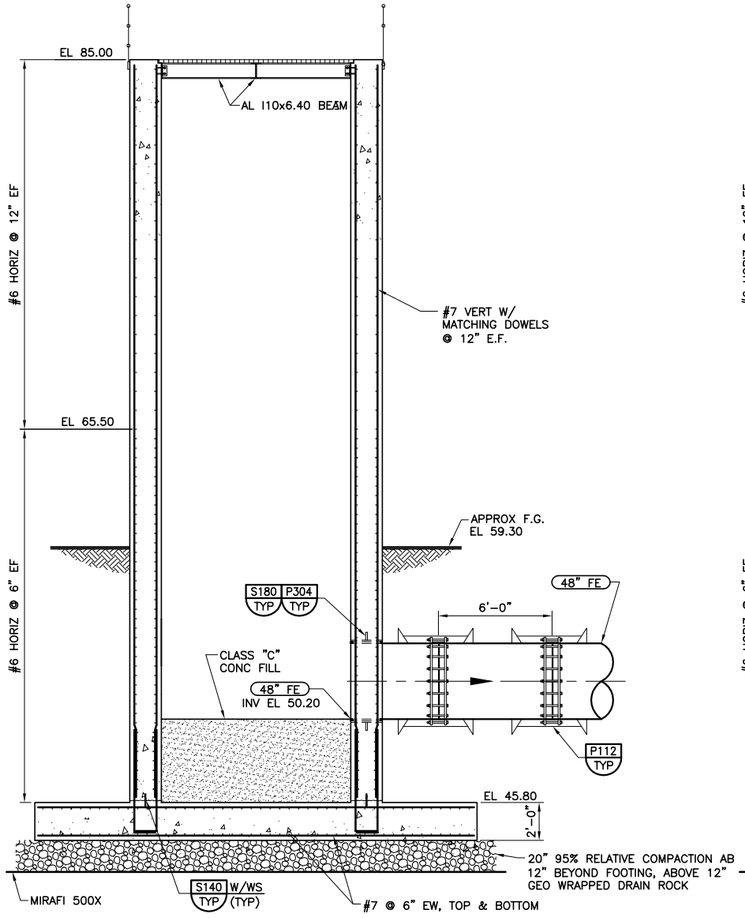

NOTE:

1. CONTRACTOR TO ENCASE BOTTOM OF PROBE PIPE TO BOTTOM OF STANDPIPE STRUCTURE.

E SP-2 SECTION
SCALE: 1/4" = 1'-0"
FILE: SFSS216

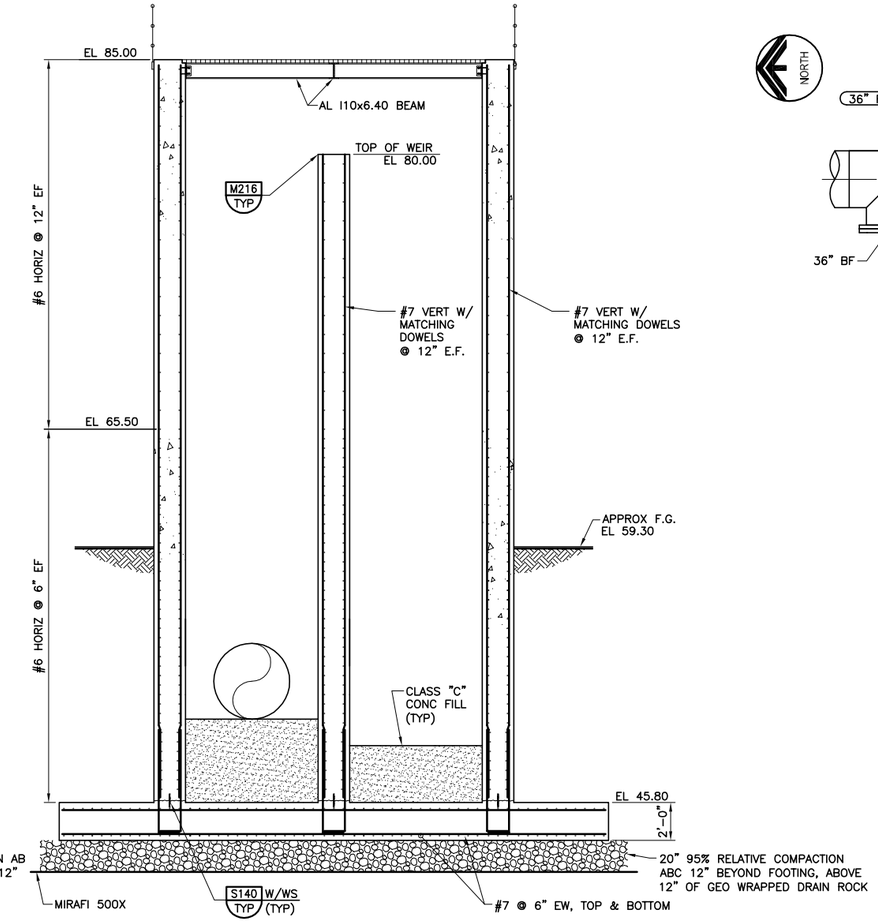

F SP-2 SECTION
SCALE: 1/4" = 1'-0"
FILE: SFSS214

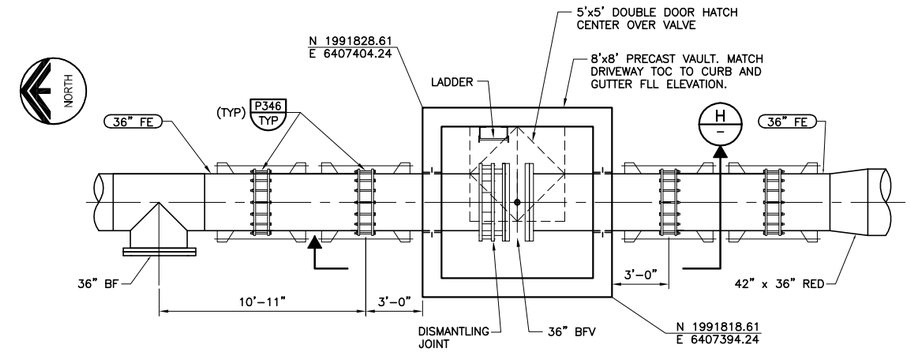

NOTES:

1. CONTRACTOR SHALL INSTALL 12" ABC BEYOND FOOTING.
2. CONTRACTOR TO SUBMIT AASHTO H20 LOADING ACCESS FOR ENGINEER'S APROVAL.

G SP-1 VALVE VAULT – PLAN
SCALE: 1/4" = 1'-0"
FILE: S-01S300

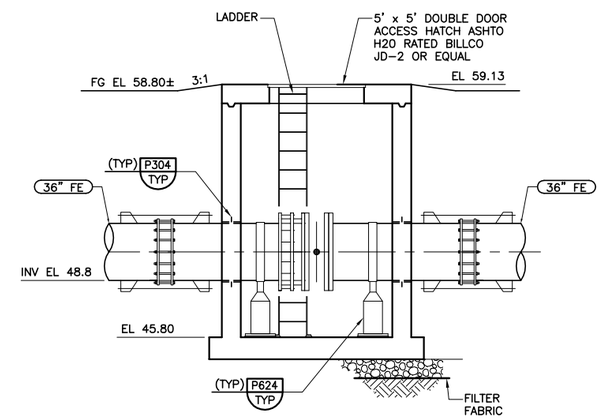

H – SECTION
SCALE: 1/4" = 1'-0"
FILE: S-01S301

REV	DATE	BY	DESCRIPTION

RECORD DRAWINGS

DESIGNED	MJH
DRAWN	DST
CHECKED	DGB
DATE	MAY 2012

DISCIPLINE ENGINEER: ** ORIGINAL SEALED BY KIPP A. MARTIN 12/07/11 C45259 **

PROJECT ENGINEER: ** ORIGINAL SEALED BY DARREN G. BAUNE 12/07/11 C68899 **

VICE PRESIDENT: ** ORIGINAL SEALED BY MICHAEL J. BRITTEN 12/07/11 C27729 **

carollo

CITY OF TURLOCK INC. 1908
STANISLAUS COUNTY, CALIFORNIA

HARDING DRAIN BYPASS
PUMP STATION AND PIPELINE
CIVIL
STANDPIPE STRUCTURE PLAN AND SECTIONS

VERIFY SCALES
BAR IS ONE INCH ON ORIGINAL DRAWING
0 1"
IF NOT ONE INCH ON THIS SHEET, ADJUST SCALES ACCORDINGLY

JOB NO. 6918B.10
DRAWING NO. SP-3
SHEET NO. 70 OF 107

FILENAME: C:\pw_working\projectwise\alaico\dms60458\C-02C003 8-26-14 08:49am ALaico XREFS: G-BDR; Mjb; BEH; CA-MJB; CA-DGB; CA-MJH; CA-AEB; CA-GRS; CA-KAM; S-01S300; SFSS216; SFSS214; S-01S301; CA-MED-S; CA-ALM; CA-ALM_11-30-11; CA-DGB_11-30-11; CA-MJB_11-30-11 TurlockLogo; Turlck_City_LogoPMS_FNL;

Last Saved By: ALaico 5-28-14 05:23pm

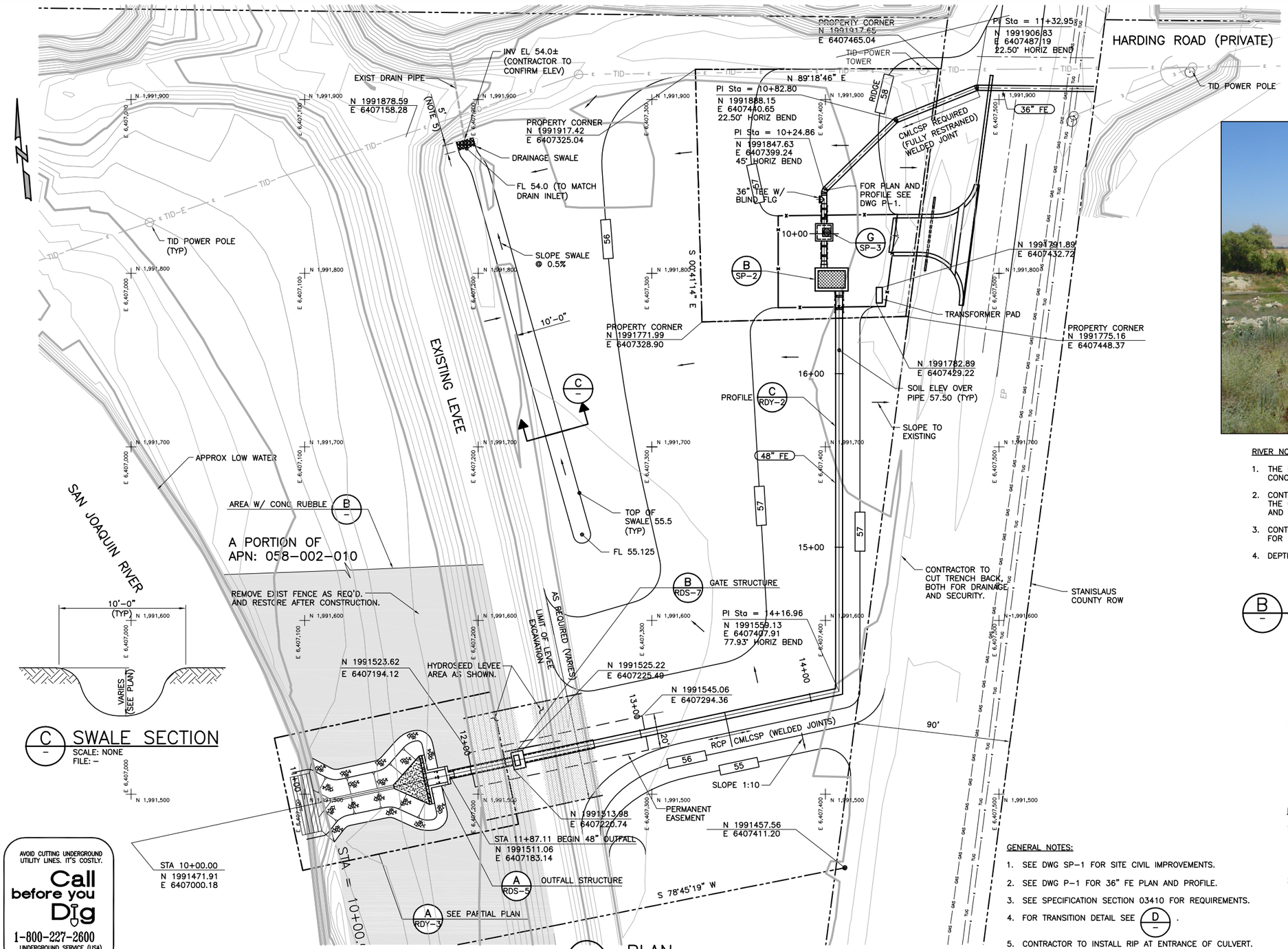

A PLAN
SCALE: 1" = 30'
FILE: Y-02Y100

C SWALE SECTION
SCALE: NONE
FILE: –

RIVER NOTES:

1. THE EXISTING BANK OF THE SAN JOAQUIN RIVER INCLUDES LARGE, BROKEN CONCRETE RUBBLE FOR RIVER BANK STABILIZATION. SEE PHOTO.
2. CONTRACTOR SHALL REMOVE THE CONCRETE RUBBLE AS NECESSARY TO INSTALL THE OUTFALL STRUCTURE PIPELINE AND LEVEE. STOCKPILE THE CONCRETE RUBBLE, AND REPLACE THE CONCRETE RUBBLE TO EXISTING CONDITIONS.
3. CONTRACTOR SHALL FIELD VERIFY EXISTING CONDITIONS AND INCLUDE ALLOWANCE FOR REMOVAL, STOCKPILING AND REPLACEMENT WITH CONTRACT BID.
4. DEPTH AND EXTENT OF RUBBLE IS UNKNOWN.

B PHOTO OF CONCRETE RUBBLE AT THE OUTFALL STRUCTURE SITE
SCALE: NTS
FILE: DSC06380.JPG

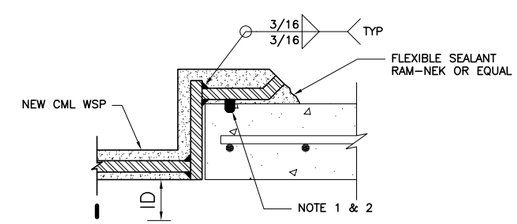

NOTES:

1. CONNECT NEW CMCL STEEL FE PIPE TO RCP WITH WELDED SEEL BELL RING OF SIZE AND SHAPE TO FIT ON CONNECTION SHALL USE EPDM O-RING GASKETS. STEEL BELL RING SHALL BE CONSTRUCTED OF ASTM A283 OR ASTM A36 STEEL AND SHALL MATCH PIPE WALL THICKNESS COAT INTERIOR OF RING WITH SOLIDS EPOXY PER 09960.
2. INSTALL EPOXY O-RING GASKETS AS SHOWN. GASKET SHALL MEET ASTM C161.SYNTHETIC NEOPRENE RUBBER. CUT OUT GROOVE FOR GASKET INTO RCP PIPE. RECOMMENDED GROOVE DEPTH SHALL BE PROVIDED BY O-RING SUPPLIER (HANSEN PIPE OR EQUAL)

D DETAIL-SPIGOT ADAPTOR
SCALE: NONE
FILE: –

GENERAL NOTES:

1. SEE DWG SP-1 FOR SITE CIVIL IMPROVEMENTS.
2. SEE DWG P-1 FOR 36" FE PLAN AND PROFILE.
3. SEE SPECIFICATION SECTION 03410 FOR REQUIREMENTS.
4. FOR TRANSITION DETAIL SEE D.
5. CONTRACTOR TO INSTALL RIP AT ENTRANCE OF CULVERT. INSTALL 5'-0" BACK FROM EDGE OF PIPE.

AVOID CUTTING UNDERGROUND UTILITY LINES. IT'S COSTLY.
Call before you Dig
1-800-227-2600
UNDERGROUND SERVICE (USA)

REV	DATE	BY	DESCRIPTION

RECORD DRAWINGS

DESIGNED	BA
DRAWN	JCI
CHECKED	WCL
DATE	MAY 2012

DISCIPLINE ENGINEER: ** ORIGINAL SEALED BY MICHAEL J. HARTLAUB 12/07/11 C74901 **

PROJECT ENGINEER: ** ORIGINAL SEALED BY DARREN G. BAUNE 12/07/11 C68899 **

VICE PRESIDENT: ** ORIGINAL SEALED BY MICHAEL J. BRITTEN 12/07/11 C27729 **

carollo

CITY OF TURLOCK INC. 1908
STANISLAUS COUNTY, CALIFORNIA

HARDING DRAIN BYPASS
PUMP STATION AND PIPELINE
CIVIL
OUTFALL GRAVITY PIPELINE SITE PLAN

VERIFY SCALES
BAR IS ONE INCH ON ORIGINAL DRAWING
0 1"
IF NOT ONE INCH ON THIS SHEET, ADJUST SCALES ACCORDINGLY

JOB NO. 6918B.10
DRAWING NO. RDY-1
SHEET NO. 71 OF 107

FILENAME: C:\pw_working\projectwise\alaico\dms60458\Y-02Y001 8-26-14 08:50am ALaico XREFS: Y-02Y100; UTILITY; G-BDR; S-02S101; C-02C100; plan; Turlock; Mjb; BEH; S-02Y100; M-02M202; ETOPO; CA-MJB; CA-DGB; CA-MJH; CA-AEB; CA-GRS; CA-KAM; NEW SWALE PLAN; CA-ALM; CA-ALM_11-30-11; CA-DGB_11-30-11; CA-MJB_11-30-11 DSC06380; Turlck_City_LogoPMS_FNL;

Last Saved By: ALaico 8-26-14 08:50am

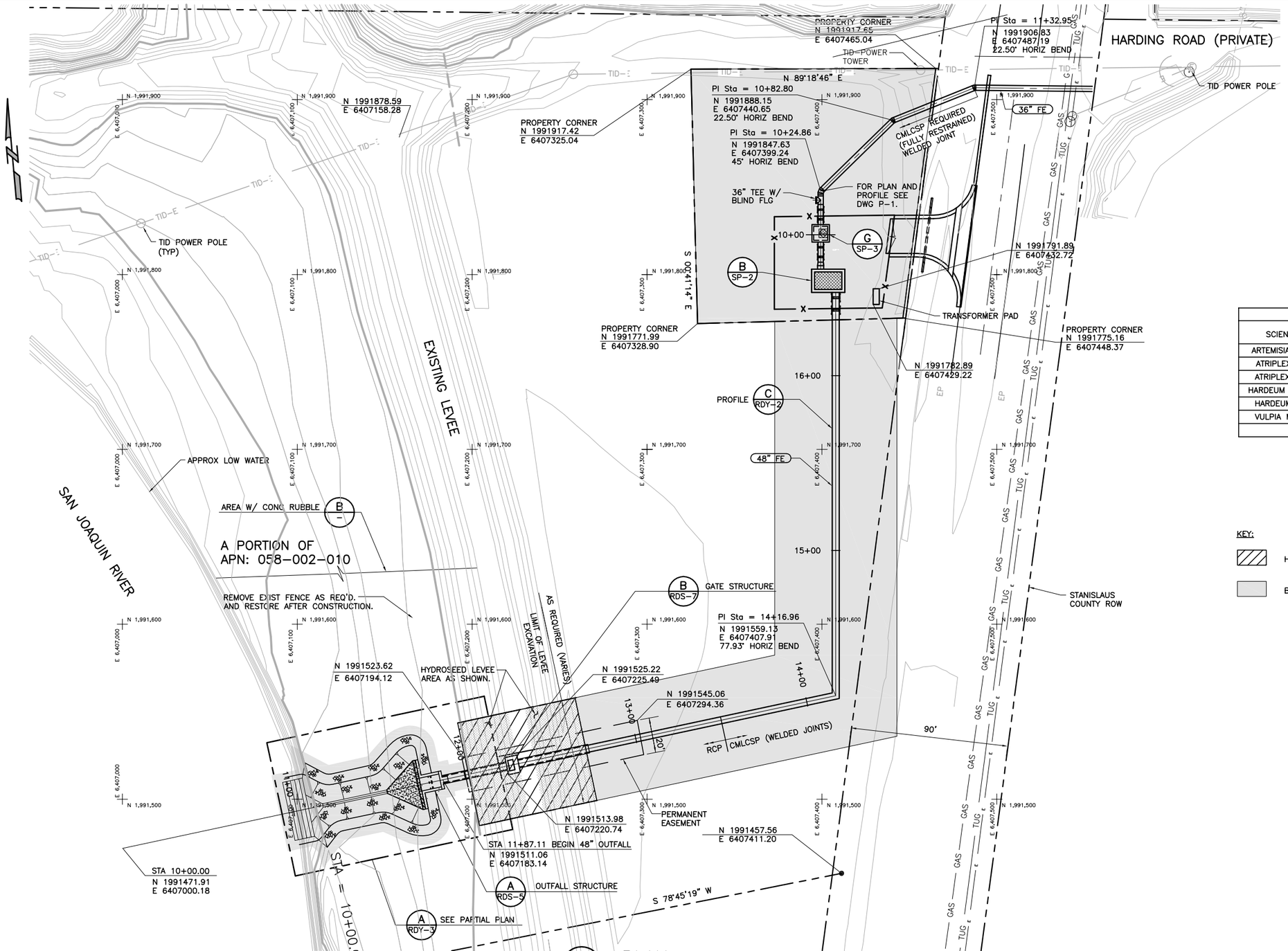

A PLAN
SCALE: 1" = 30'
FILE: Y-02Y100

SEED MIX FOR AREA WEST OF CARPENTER ROAD			
SCIENTIFIC NAME	COMMON NAME	GROW FORM	APPLICATION (LBS/ACRE)
ARTEMISIA DOUGLASIANA	MUGWORT	FORB	1
ATRIPLEX CONESCENS	FOURWING SALTBUSH	SHRUB	2
ATRIPLEX LENTIFORMIS	BIG SALTBUSH	SHRUB	8
HARDEUM BRACHYANTHEN	MEADOW BARLEY	GRASS	10
HARDEUM DEPRESSUM	ALKALI BARLEY	GRASS	10
VULPIA MICROSTACHYS	VULPIA	GRASS	12
	TOTAL		43

KEY:

HYDROMULCH SEEDING (APPROX 4118 SQFT)

BROADCAST SEEDING IN DISTURBED AREAS (APPROX 47606 SQFT)

RECORD DRAWINGS

REV	DATE	BY	DESCRIPTION

DESIGNED
DRAWN
CHECKED
DATE OCTOBER 2012
DISCIPLINE ENGINEER
PROJECT ENGINEER
** ORIGINAL SEALED BY DARREN G. BAUNE 10/03/12 C68899 **
VICE PRESIDENT

carollo

CITY OF TURLOCK INC. 1908
STANISLAUS COUNTY, CALIFORNIA

HARDING DRAIN BYPASS
PUMP STATION AND PIPELINE
CIVIL
HYDROSEEDING PLAN AT OUTFALL AND STANDPIPE

VERIFY SCALES
BAR IS ONE INCH ON ORIGINAL DRAWING
0 1"
IF NOT ONE INCH ON THIS SHEET, ADJUST SCALES ACCORDINGLY

JOB NO. 6918B.10
DRAWING NO. RDY-1A
SHEET NO. 71A OF 107

FILENAME: C:\pw_working\projectwise\alaico\dms60458\Y-02Y001-A 8-26-14 08:51am ALaico XREFS: Y-02Y100; UTILITY; G-BDR; S-02S101; C-02C100; plan; Turlock; Mjb; BEH; S-02Y100; M-02M202; ETOPO; CA-AEB; CA-GRS; CA-KAM; CA-ALM; CA-ALM_11-30-11; CA-DGB_11-30-11; CA-MJB_11-30-11; CA-MJB; CA-DGB; CA-MJH DSC06380; Turlck_City_LogoPMS_FNL;

Last Saved By: ALaico 5-28-14 05:30pm

AVOID CUTTING UNDERGROUND UTILITY LINES. IT'S COSTLY.
Call before you Dig
1-800-227-2600
UNDERGROUND SERVICE (USA)

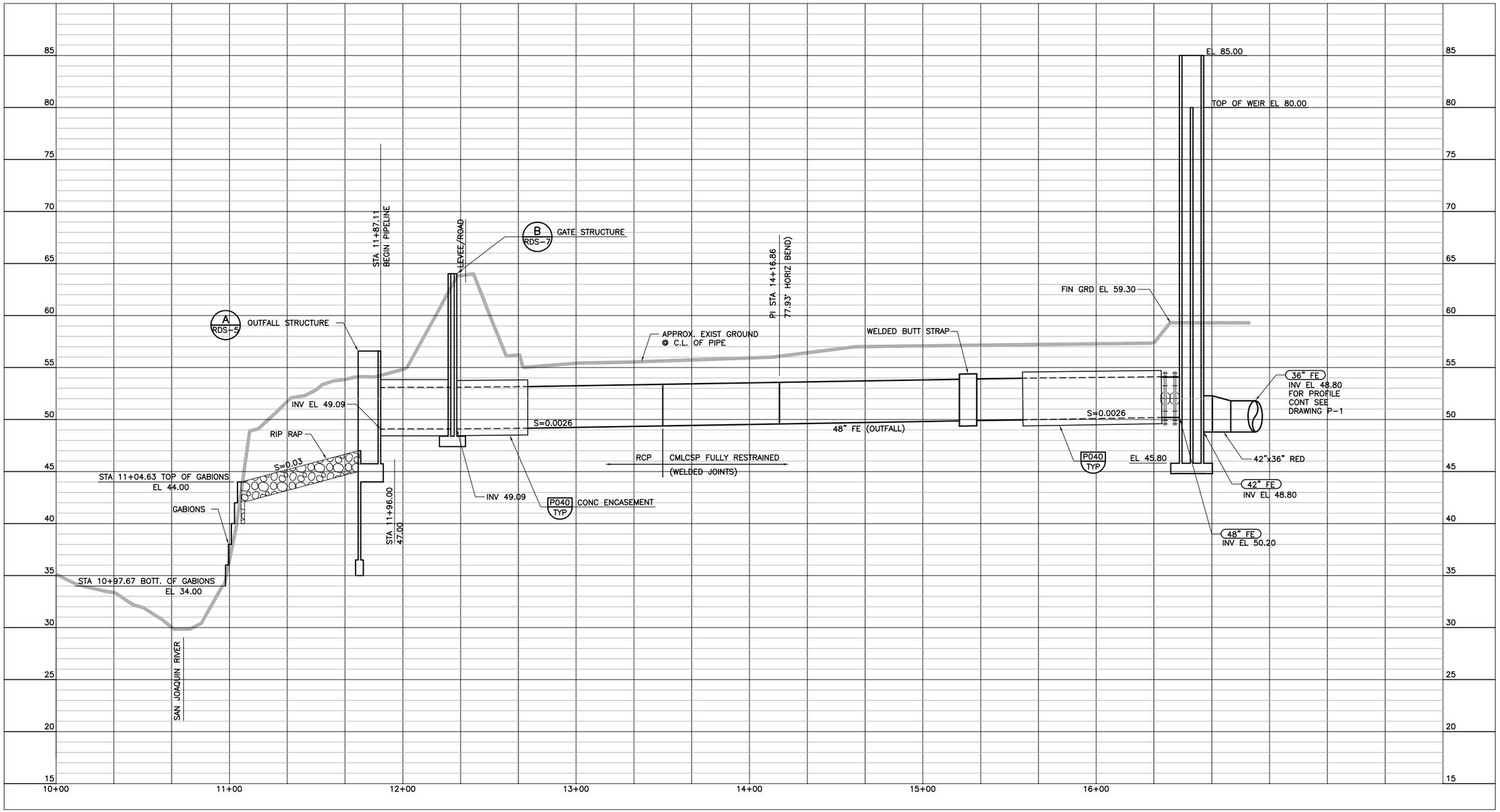

B / RDY-1 OUTFALL PROFILE
SCALE: HORIZ 1" = 30' : VERT 1" = 5'
FILE: RCPRF002

REV	DATE	BY	DESCRIPTION

RECORD DRAWINGS

DESIGNED
DRAWN JCI
CHECKED
DATE MAY 2012

DISCIPLINE ENGINEER: ** ORIGINAL SEALED BY MICHAEL J. HARTLAUB 12/07/11 C74901 **
PROJECT ENGINEER: ** ORIGINAL SEALED BY DARREN G. BAUNE 12/07/11 C68899 **
VICE PRESIDENT: ** ORIGINAL SEALED BY MICHAEL J. BRITTEN 12/07/11 C27729 **

carollo

CITY OF TURLOCK INC. 1908
STANISLAUS COUNTY, CALIFORNIA

HARDING DRAIN BYPASS
PUMP STATION AND PIPELINE
CIVIL
OUTFALL GRAVITY PIPELINE PROFILE

VERIFY SCALES
BAR IS ONE INCH ON ORIGINAL DRAWING
0 1"
IF NOT ONE INCH ON THIS SHEET, ADJUST SCALES ACCORDINGLY

JOB NO. 6918B.10
DRAWING NO. RDY-2
SHEET NO. 72 OF 107

FILENAME: C:\pw_working\projectwise\alaico\dms60458\Y-02Y002 8-26-14 08:51am ALaico XREFS: rcprf002; G-BDR; Mjb; BEH; BKA; CA-MJB; CA-DGB; CA-MJH; CA-AEB; CA-GRS; CA-KAM; CA-ALM; CA-ALM_11-30-11; CA-DGB_11-30-11; CA-MJB_11-30-11 Turlck_City_LogoPMS_FNL;

Last Saved By: ALaico 6-24-14 10:52am

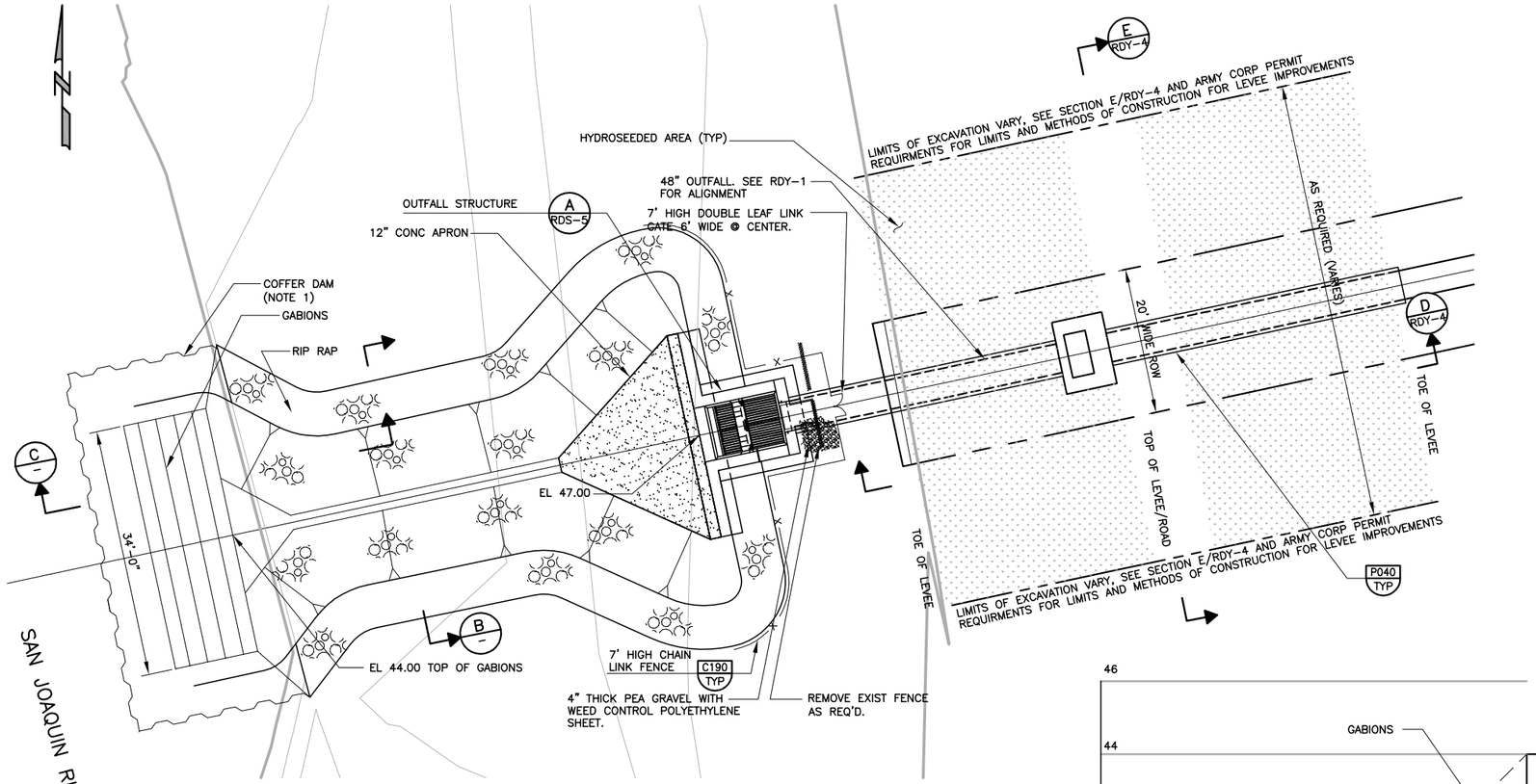

A – PARTIAL PLAN

SCALE: 1" = 10'
FILE: Y02Y100

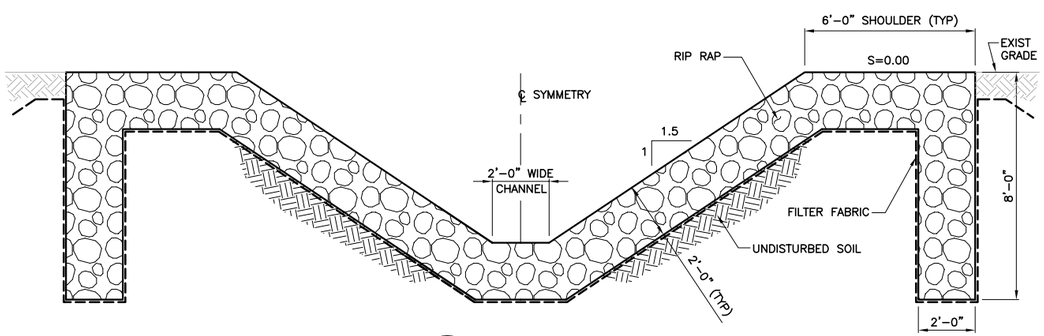

B – SECTION

SCALE: 3/8"= 1'-0"
FILE: Y-02Y302

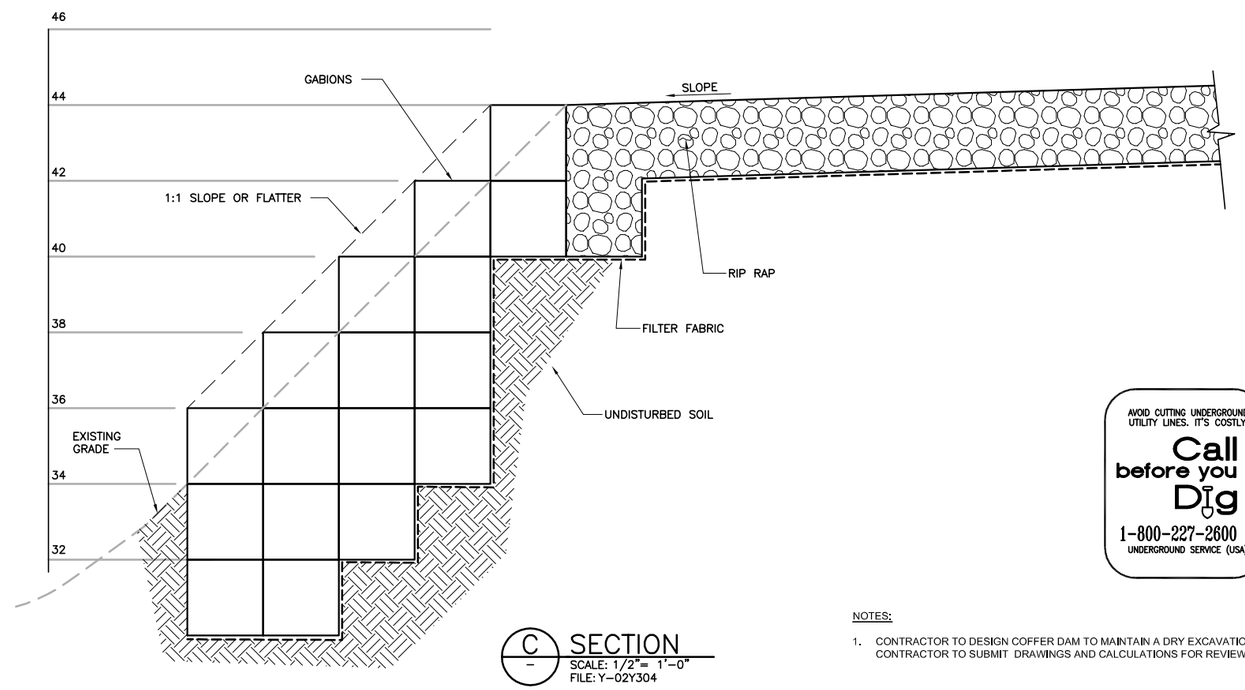

C – SECTION

SCALE: 1/2"= 1'-0"
FILE: Y-02Y304

AVOID CUTTING UNDERGROUND UTILITY LINES. IT'S COSTLY.
Call before you Dig
1-800-227-2600
UNDERGROUND SERVICE (USA)

NOTES:

1. CONTRACTOR TO DESIGN COFFER DAM TO MAINTAIN A DRY EXCAVATION. CONTRACTOR TO SUBMIT DRAWINGS AND CALCULATIONS FOR REVIEW.

REV	DATE	BY	DESCRIPTION
			RECORD DRAWINGS

DESIGNED
DRAWN JCI
CHECKED
DATE MAY 2012

DISCIPLINE ENGINEER: ** ORIGINAL SEALED BY MICHAEL J. HARTLAUB 12/07/11 C74901 **
PROJECT ENGINEER: ** ORIGINAL SEALED BY DARREN G. BAUNE 12/07/11 C68899 **
VICE PRESIDENT: ** ORIGINAL SEALED BY MICHAEL J. BRITTEN 12/07/11 C27729 **

carollo

CITY OF TURLOCK INC. 1908
STANISLAUS COUNTY, CALIFORNIA

HARDING DRAIN BYPASS
PUMP STATION AND PIPELINE
CIVIL
OUTFALL GRAVITY PIPELINE
PARTIAL PLAN AND SECTIONS

VERIFY SCALES
BAR IS ONE INCH ON ORIGINAL DRAWING
0 1"
IF NOT ONE INCH ON THIS SHEET, ADJUST SCALES ACCORDINGLY

JOB NO. 6918B.10
DRAWING NO. RDY-3
SHEET NO. 73 OF 107

FILENAME: C:\pw_working\projectwise\alaico\dms60458\Y-02Y003 8-26-14 08:52am ALaico XREFS: G-BDR; Y-02Y100; Y-02Y304; S-02S101; Mjb; BEH; BKA; S-02Y100; CA-MJB; CA-DGB; CA-MJH; CA-AEB; CA-GRS; CA-KAM; M-02M202; Y-02Y302; NEW SWALE PLAN; CA-ALM; CA-ALM_11-30-11; CA-DGB_11-30-11; CA-MJB_11-30-11 Turlck_City_LogoPMS_FNL;

Last Saved By: ALaico 5-28-14 11:05am

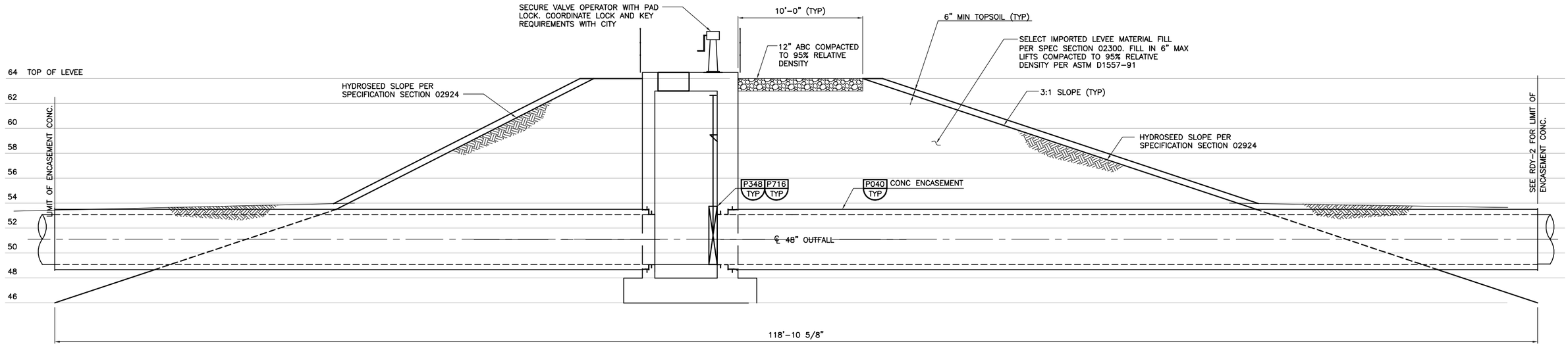

D RDY-3 TYPICAL LEVEE SECTION
SCALE: 1/4" = 1'-0"
FILE: Y-20Y402

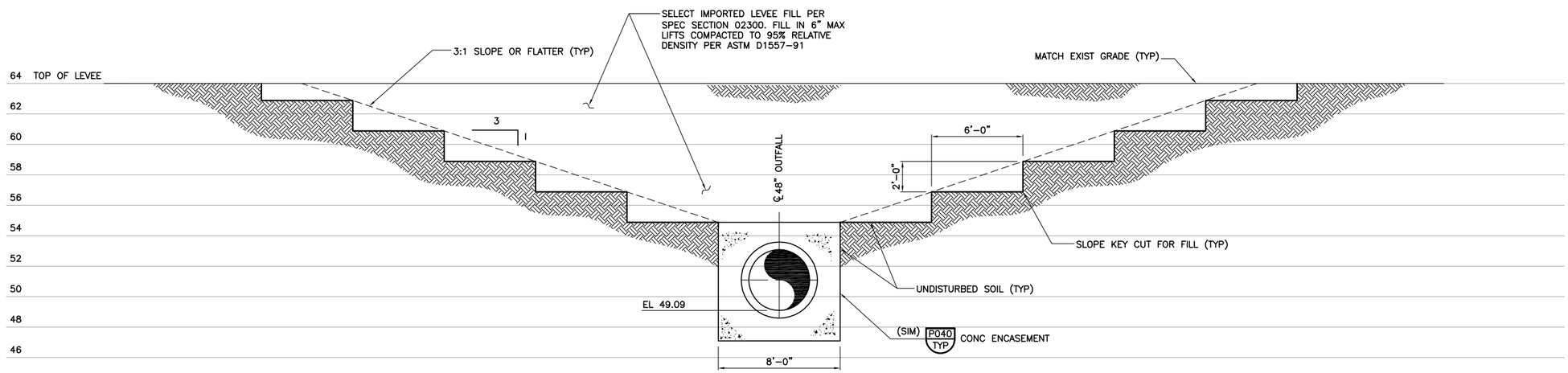

E RDY-3 TYPICAL LEVEE SECTION
SCALE: 1/4" = 1'-0"
FILE: Y-02Y400

Last Saved By: ALaico 5-28-14 05:32pm

REV	DATE	BY	DESCRIPTION
			RECORD DRAWINGS

DESIGNED
DRAWN JCI
CHECKED
DATE MAY 2012

DISCIPLINE ENGINEER: ** ORIGINAL SEALED BY MICHAEL J. HARTLAUB 12/07/11 C74901 **

PROJECT ENGINEER: ** ORIGINAL SEALED BY DARREN G. BAUNE 12/07/11 C68999 **

VICE PRESIDENT: ** ORIGINAL SEALED BY MICHAEL J. BRITTEN 12/07/11 C27729 **

carollo

CITY OF TURLOCK INC. 1908
STANISLAUS COUNTY, CALIFORNIA

HARDING DRAIN BYPASS
PUMP STATION AND PIPELINE
CIVIL
OUTFALL GRAVITY PIPELINE SECTIONS

VERIFY SCALES
BAR IS ONE INCH ON ORIGINAL DRAWING
0 1"
IF NOT ONE INCH ON THIS SHEET, ADJUST SCALES ACCORDINGLY

JOB NO. 6918B.10
DRAWING NO. RDY-4
SHEET NO. 74 OF 107

FILENAME: C:\pw_working\projectwise\alaico\dms60458\Y-02Y004 8-26-14 08:52am ALaico XREFS: G-BDR; Y-02Y400; Y-02Y402; Mjb; BEH; BKA; CA-MJB; CA-DGB; CA-MJH; CA-AEB; CA-GRS; CA-KAM; SFSS21B; CA-ALM; CA-ALM_11-30-11; CA-DGB_11-30-11; CA-MJB_11-30-11 Turlck_City_LogoPMS_FNL;

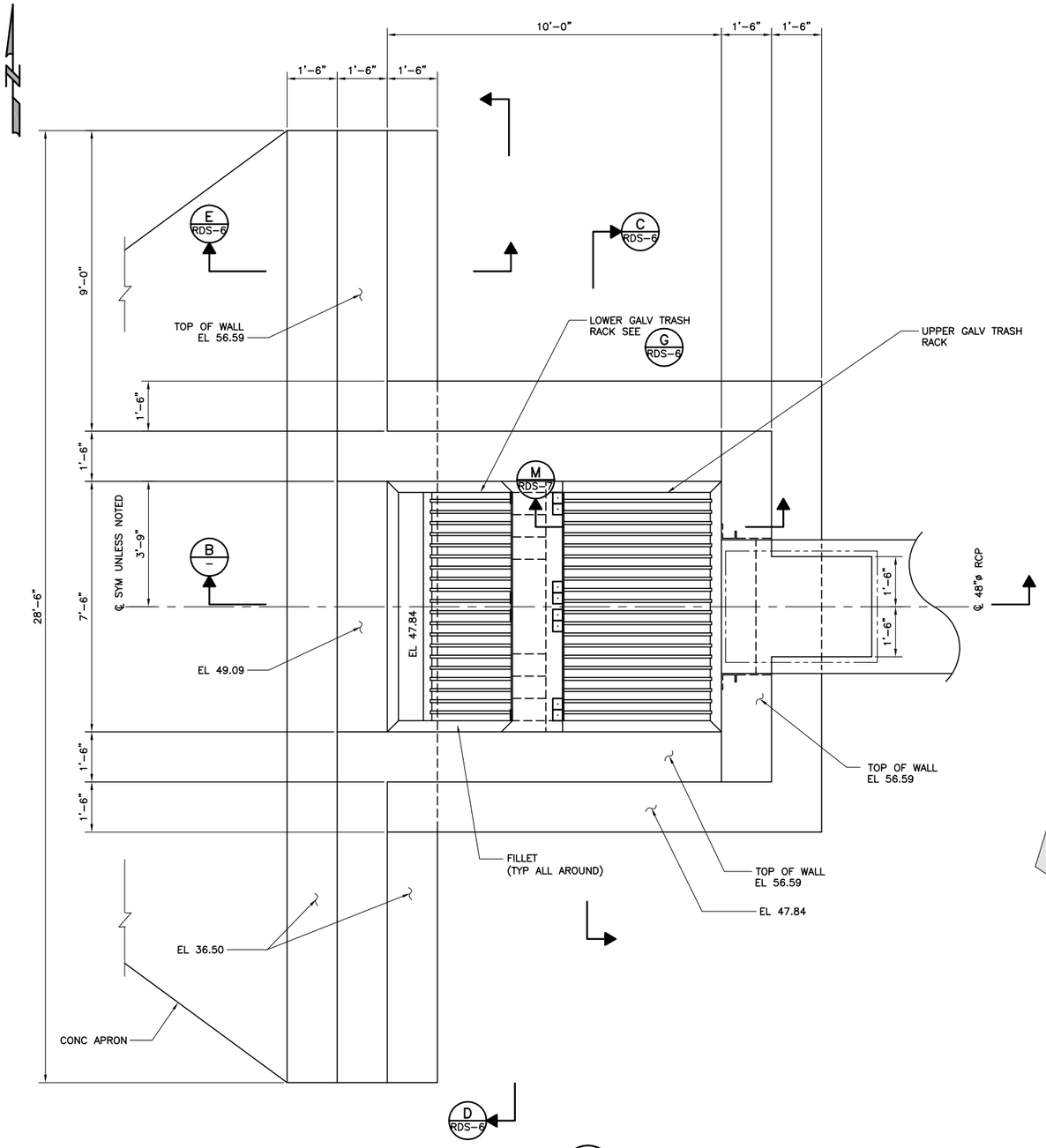

A DIFFUSER – PLAN
SCALE: 1/2" = 1'-0"
FILE: S-02Y100

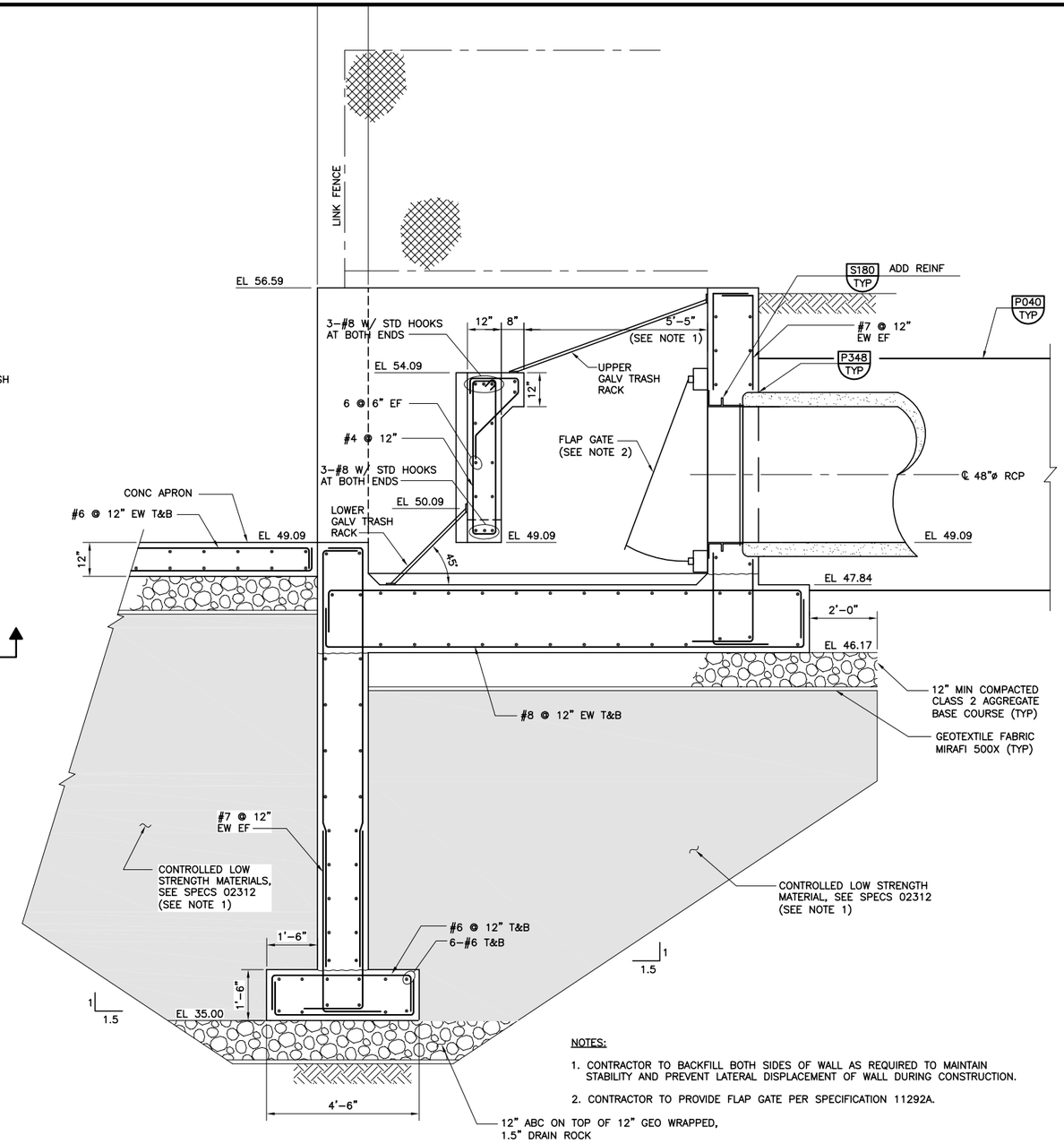

NOTES:

1. CONTRACTOR TO BACKFILL BOTH SIDES OF WALL AS REQUIRED TO MAINTAIN STABILITY AND PREVENT LATERAL DISPLACEMENT OF WALL DURING CONSTRUCTION.
2. CONTRACTOR TO PROVIDE FLAP GATE PER SPECIFICATION 11292A.

B SECTION
SCALE: 1/2" = 1'-0"
FILE: S-02Y200

Beyaz & Patel, Inc.
Consulting Engineers
W0415 Walnut Creek, California

RECORD DRAWINGS

REV	DATE	BY	DESCRIPTION

DESIGNED B. LOW
DRAWN E. POSADAS
CHECKED C. PAO
DATE MAY 2012

DISCIPLINE ENGINEER: ** ORIGINAL SEALED BY GARRY HO 12/07/11 S2534 **
PROJECT ENGINEER: ** ORIGINAL SEALED BY DARREN G. BAUNE 12/07/11 C68899 **
VICE PRESIDENT: ** ORIGINAL SEALED BY MICHAEL J. BRITTEN 12/07/11 C27729 **

carollo

CITY OF TURLOCK INC. 1908
STANISLAUS COUNTY, CALIFORNIA

HARDING DRAIN BYPASS
PUMP STATION AND PIPELINE
STRUCTURAL
OUTFALL STRUCTURE
PLAN AND SECTION

VERIFY SCALES
BAR IS ONE INCH ON ORIGINAL DRAWING
0 1"
IF NOT ONE INCH ON THIS SHEET, ADJUST SCALES ACCORDINGLY

JOB NO. 6918B.10
DRAWING NO. RDS-5
SHEET NO. 75 OF 107

Last Saved By: ALaico 8-26-14 08:53am

FILENAME: C:\pw_working\projectwise\alaico\dms60461\S-02Y001 8-26-14 08:53am ALaico XREFS: S-02Y100; S-02Y200; G-BDR; Mjb; BEH; CA-MJB; CA-DGB; CA-MJH; CA-AEB; CA-GRS; CA-KAM; CA-ALM; CA-ALM_11-30-11; CA-DGB_11-30-11; CA-MJB_11-30-11 TurlockLogo; Turlck_City_LogoPMS_FNL;

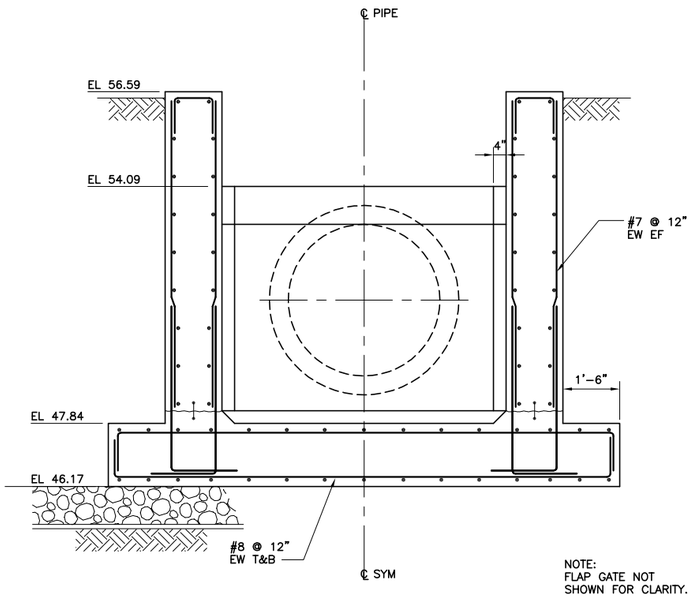

C RDS-5 SECTION
SCALE: 1/2" = 1'-0"
FILE: S-02Y201

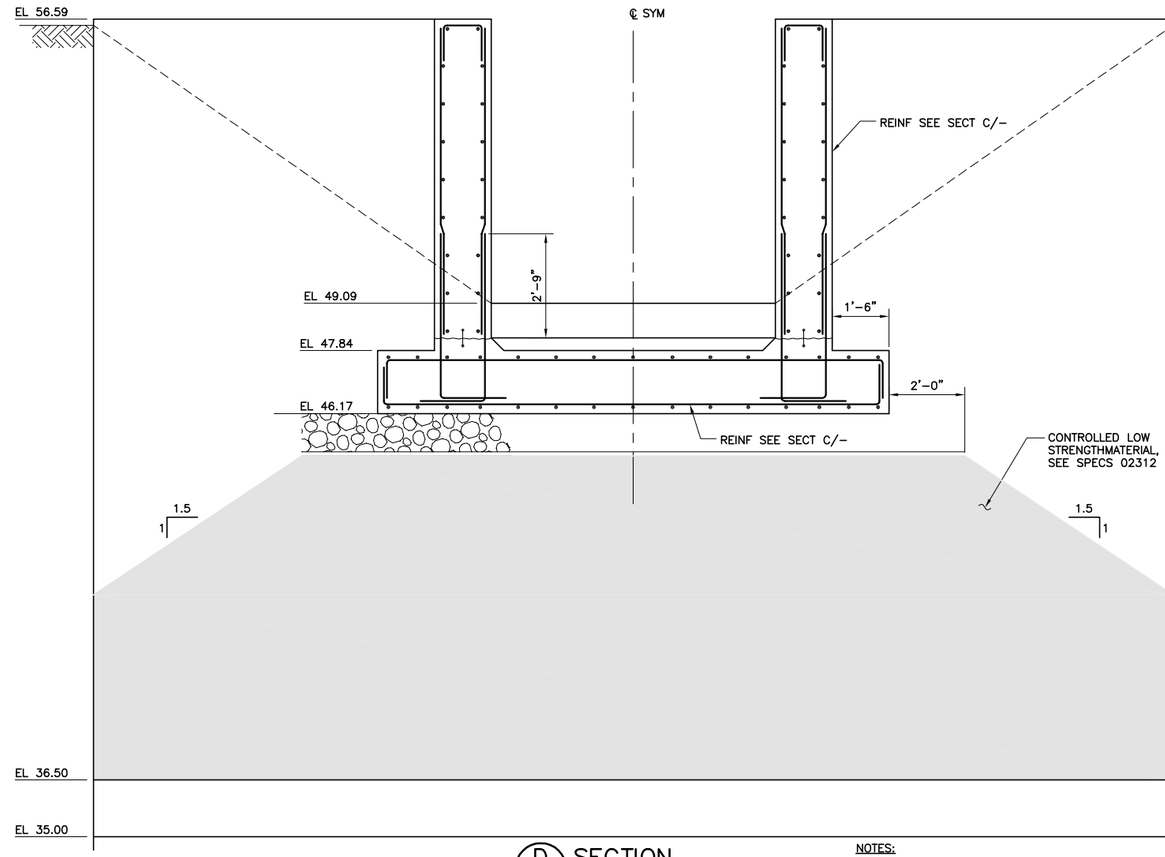

D RDS-5 SECTION
SCALE: 1/2" = 1'-0"
FILE: S-02Y202

NOTES:

1. TRASH RACK NOT SHOWN FOR CLARITY.
2. CLSM NOT SHOWN FOR CLARITY.

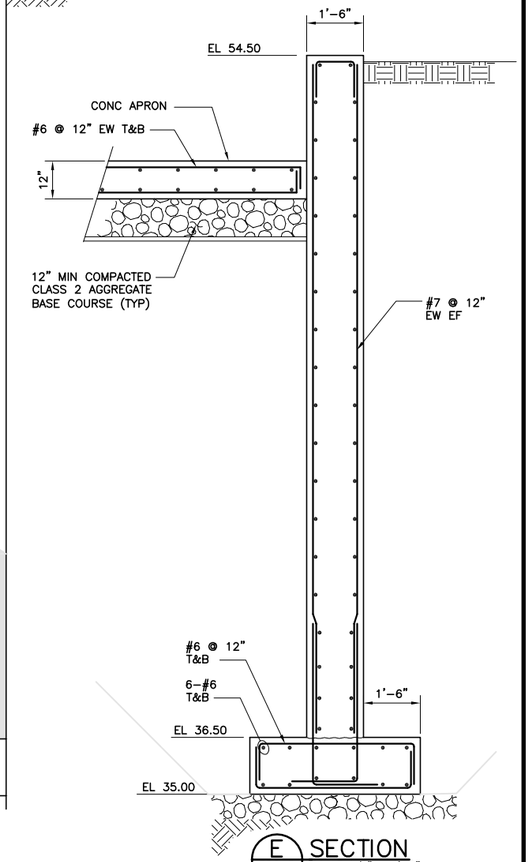

E RDS-5 SECTION
SCALE: 1/2" = 1'-0"
FILE: S-02Y203

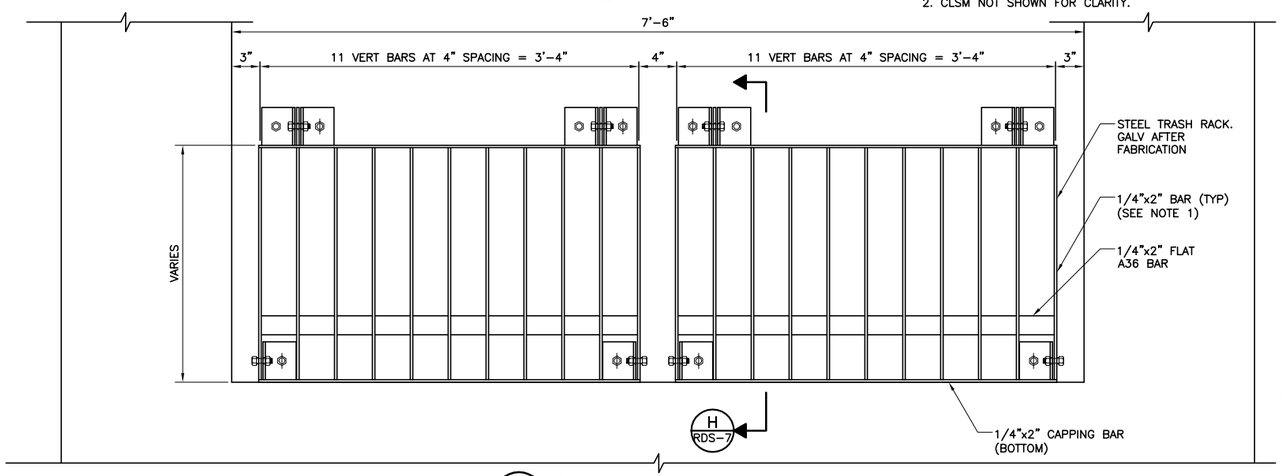

G RDS-5 DETAIL – TRASH RACK
SCALE: 1 1/2" = 1'-0"
FILE: S-02Y204

NOTE:

1. ALL WELDS SHALL BE 3/16" FILLET UNLESS NOTED OTHERWISE.

Beyaz & Patel, Inc.
Consulting Engineers
W0415 Walnut Creek, California

RECORD DRAWINGS

REV	DATE	BY	DESCRIPTION

DESIGNED B. LOW
DRAWN E. POSADAS
CHECKED C. PAO
DATE MAY 2012

DISCIPLINE ENGINEER: ** ORIGINAL SEALED BY GARRY HO 12/07/11 S2534 **
PROJECT ENGINEER: ** ORIGINAL SEALED BY DARREN G. BAUNE 12/07/11 C68899 **
VICE PRESIDENT: ** ORIGINAL SEALED BY MICHAEL J. BRITTEN 12/07/11 C27729 **

carollo

CITY OF TURLOCK INC. 1908
STANISLAUS COUNTY, CALIFORNIA

HARDING DRAIN BYPASS
PUMP STATION AND PIPELINE
STRUCTURAL
OUTFALL STRUCTURE
SECTIONS AND DETAILS

VERIFY SCALES
BAR IS ONE INCH ON ORIGINAL DRAWING
0 1"
IF NOT ONE INCH ON THIS SHEET, ADJUST SCALES ACCORDINGLY

JOB NO. 6918B.10
DRAWING NO. RDS-6
SHEET NO. 76 OF 107

Last Saved By: ALaico 8-26-14 08:54am

FILENAME: C:\pw_working\projectwise\alaico\dms60461\S-02Y002 8-26-14 08:54am ALaico XREFS: S-02Y201; S-02Y202; S-02Y203; G-BDR; Mjb; BEH; CA-MJB; CA-DGB; CA-MJH; CA-AEB; CA-GRS; CA-KAM; S-02Y204; CA-ALM; CA-ALM_11-30-11; CA-DGB_11-30-11; CA-MJB_11-30-11 TurlockLogo; Turlck_City_LogoPMS_FNL;

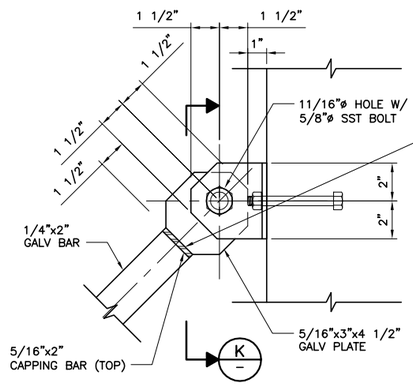

J SECTION
SCALE: 1 1/2" = 1'-0"
FILE: S-02Y206

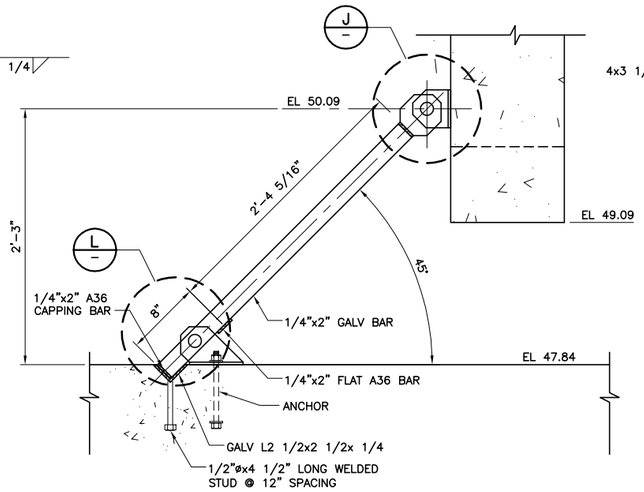

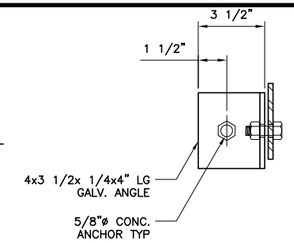

L SECTION
SCALE: 1 1/2" = 1'-0"
FILE: S-02Y214

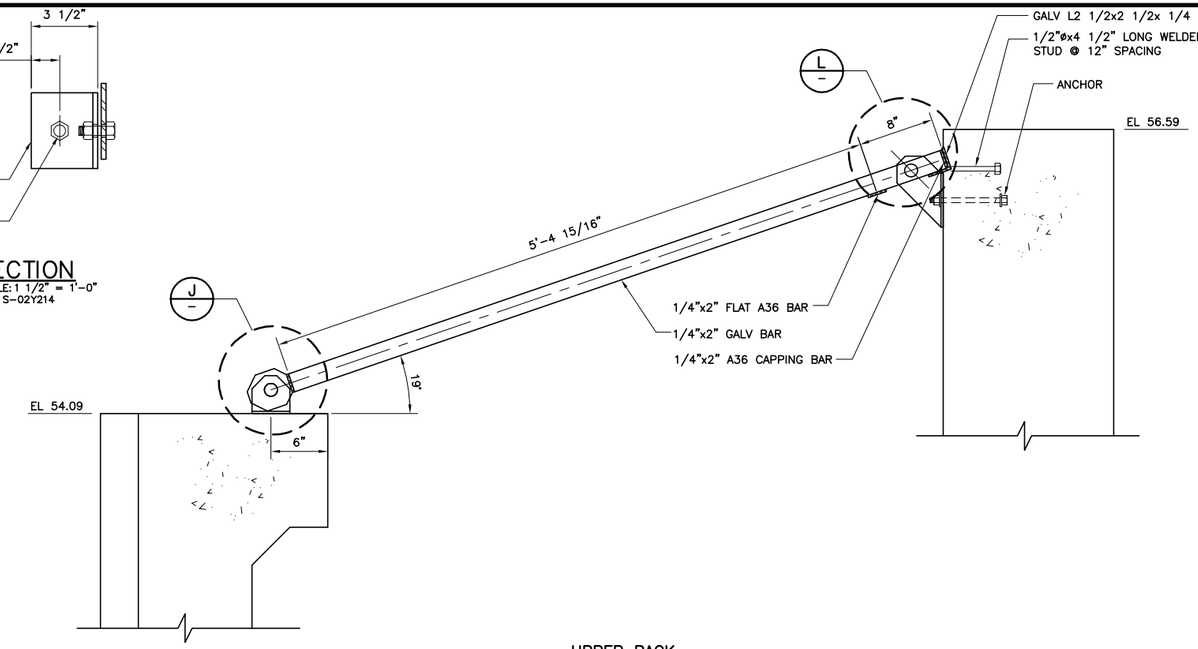

LOWER RACK

H SECTION
SCALE: 1 1/2" = 1'-0"
FILE: S-02Y205

RACK NOTE:

1. ALL WELDS SHALL BE 3/16" FILLET UNLESS NOTED OTHERWISE.

UPPER RACK

M SECTION
RDS-5
SCALE: 1 1/2" = 1'-0"
FILE: S-02Y205

RACK NOTE:

1. ALL WELDS SHALL BE 3/16" FILLET UNLESS NOTED OTHERWISE.

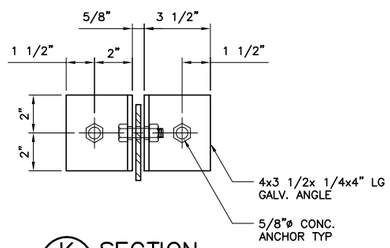

K SECTION
SCALE: 1 1/2" = 1'-0"
FILE: S-02Y207

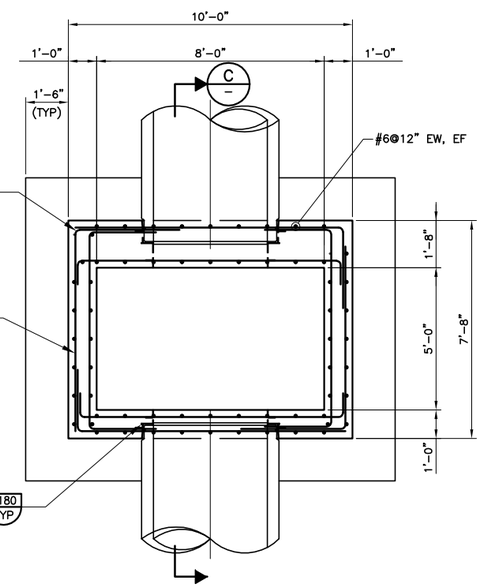

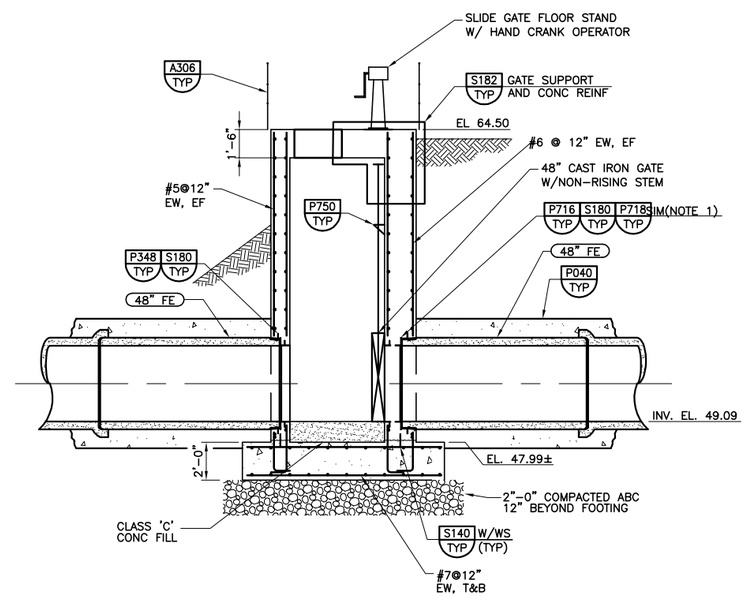

GATE STRUCTURE NOTES:

1. HOOK ADD BARS AT FAR FACE OF WALL.
2. PROVIDE BILCO JDAL-H20 DOOR OR EQUAL. PROVIDE RECESSED CYLINDER LOCK WITH A KEY WAY PROTECTED COVER PLATE. PROVIDE 316 SST HARDWARE.

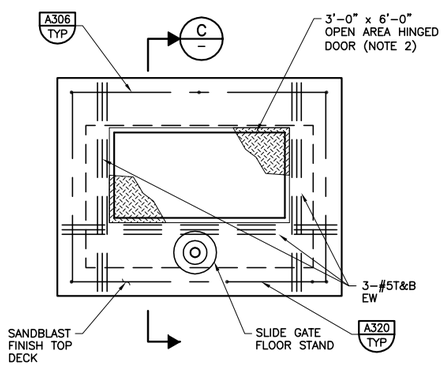

B TOP PLAN – GATE STRUCTURE
SCALE: 3/8" = 1'-0"
FILE: SFSS219

D FOUNDATION PLAN – GATE STRUCTURE
SCALE: 3/8" = 1'-0"
FILE: SFSS220

C SECTION
SCALE: 1/4" = 1'-0"
FILE: SFSS218

REV	DATE	BY	DESCRIPTION

RECORD DRAWINGS

DESIGNED DGB
DRAWN HPG
CHECKED MJH
DATE MAY 2012

DISCIPLINE ENGINEER: ** ORIGINAL SEALED BY GARRY HO 12/07/11 S2534 **

PROJECT ENGINEER: ** ORIGINAL SEALED BY DARREN G. BAUNE 12/07/11 C68899 **

VICE PRESIDENT: ** ORIGINAL SEALED BY MICHAEL J. BRITTEN 12/07/11 C27729 **

carollo

CITY OF TURLOCK INC. 1908
STANISLAUS COUNTY, CALIFORNIA

HARDING DRAIN BYPASS
PUMP STATION AND PIPELINE
STRUCTURAL
OUTFALL STRUCTURE
SECTIONS AND DETAILS

VERIFY SCALES
BAR IS ONE INCH ON ORIGINAL DRAWING
0 1"
IF NOT ONE INCH ON THIS SHEET, ADJUST SCALES ACCORDINGLY

JOB NO. 6918B.10
DRAWING NO. RDS-7
SHEET NO. 77 OF 107

Last Saved By: ALaico 5-28-14 09:33am

FILENAME: C:\pw_working\projectwise\alaico\dms60461\S-02Y003 8-26-14 08:54am ALaico XREFS: S-02Y205; S-02Y206; S-02Y207; G-BDR; Mjb; BEH; CA-MJB; CA-DGB; CA-MJH; CA-AEB; CA-GRS; CA-KAM; SFSS218; SFSS221; SFSS219; SFSS220; S-02Y214; CA-ALM; CA-ALM_11-30-11; CA-DGB_11-30-11; CA-MJB_11-30-11 Turlck_City_LogoPMS_FNL;

GENERAL NOTES:

1. ALL LIGHTING SWITCHES, MANUAL STARTERS, CONTROL STATIONS, DISCONNECT SWITCHES, AND THERMOSTATS SHALL BE MOUNTED AT 48" ABOVE FINISHED FLOOR UNLESS OTHERWISE SPECIFIED OR INDICATED ON THE DRAWINGS.
2. CONVENIENCE OUTLETS SHALL BE MOUNTED AT 18" ABOVE FINISHED FLOOR OR GRADE UNLESS OTHERWISE SPECIFIED OR INDICATED ON THE DRAWINGS.
3. A SAFETY DISCONNECT SWITCH SHALL BE PROVIDED AS REQUIRED BY LATEST NATIONAL ELECTRICAL CODE FOR ANY EQUIPMENT FURNISHED OR SUPPLIED WITHOUT A DISCONNECT.
4. WALL MOUNTED PANELS AND EQUIPMENT SHALL BE STRUCTURALLY SUPPORTED BY PREFORMED VERTICAL CHANNELS.
5. ALL OUTDOOR ENCLOSURES SHALL BE STAINLESS STEEL NEMA 4X UNLESS NOTED OTHERWISE.
6. NOT ALL EQUIPMENT INTERCONNECTIONS ARE SHOWN ON THE FLOOR PLANS. REFER TO ALL SCHEMATIC DIAGRAMS, CONTROL DIAGRAMS, SINGLE LINE DIAGRAMS, SPECIFICATIONS, AND P&ID'S FOR ADDITIONAL FIELD WIRING REQUIRED.
7. FOR MOTORS SPECIFIED WITH SPACE HEATERS, CONTROL POWER TRANSFORMERS SHALL HAVE ADEQUATE CAPACITY TO HANDLE THE EXTRA RESISTIVE LOAD AS REQUIRED.
8. ALL POWER CONDUIT RUNS SHALL CONTAIN A SEPARATE GROUNDING CONDUCTOR (SIZED PER NEC) WHETHER OR NOT SHOWN ON THE PLANS.
9. IN ADDITION TO SPECIFIC REQUIREMENTS OUTLINED HEREIN, ALL DEVICES SUCH AS PUSHBUTTON STATIONS, ETC. SHALL HAVE EXTRA CORROSION PROTECTION HYPALON PROTECTION BOOTS HAVING 316 STAINLESS STEEL INSERT RING OR EQUAL.
10. ALL CONDUITS ENCASED IN CONCRETE SLABS, FLOORS, CEILINGS OR WALLS SHALL BE SPACED IN CONFORMANCE WITH TYPICAL DETAILS E134 AND E136.
11. COORDINATE ALL CONDUIT STUB-UP LOCATIONS INTO ELECTRICAL EQUIPMENT WITH ACCEPTED VENDOR DRAWINGS.
12. COORDINATE ALL NEW DUCTBANK RUNS WITH EXISTING AND NEW PIPING AND UTILITIES.
13. INSTALL NYLON PULL LINES IN ALL NEW CONDUIT RUNS AND SIZE AS REQUIRED.
14. TYPICAL DETAILS SHOWN IN THE CONSTRUCTION DOCUMENTS SHALL APPLY TO ALL LOCATIONS WHETHER SPECIFICALLY REFERENCED OR NOT ON ANY DRAWING.
15. PENDANT MOUNTED FIXTURES SHALL BE MOUNTED AS CLOSE AS POSSIBLE TO CEILING. ALL MOUNTING ELEVATIONS SHALL BE ABOVE FINISHED FLOOR UNLESS OTHERWISE NOTED.

ABBREVIATIONS

AC	AIR CONDITIONER	NCHO	NORMALLY CLOSED HEAD OPEN
ACB	AIR CIRCUIT BREAKER	N.C.	NORMALLY CLOSED
AFF	ABOVE FINISH FLOOR	NIC	NOT IN CONTRACT
		NL	NIGHT LIGHT
BCW	BARE COPPER WIRE	N.O.	NORMALLY OPEN
BKR	BREAKER	NOHC	NORMALLY OPEN HEAD CLOSED
BLDG	BUILDING	NTS	NOT TO SCALE
BLR	BLOWER		
BSN	BASIN	OIS	OUT/IN PUT STATION
		OL	OVERLOAD
C	CONDUIT		
CCTV	CLOSED CIRCUIT TELEVISION	PA	PAGING SYSTEM
CCU	CENTRAL CONTROL UNIT	PB	POWER PULL BOX
CLR	GAS COOLER	PBU	POLYMER BLEND UNIT
COAX	COAXIAL CABLE	PCS	PVC COATED STEEL CONDUIT
COMP	CONDUIT ONLY	PIT	PRESSURE INDICATOR TRANSMITTER
CO	COMPARTMENT	PIV	POST INDICATOR VALVE
CPR	COMPRESSOR	PLC	PROGRAMMABLE LOGIC CONTROLLER
CPT	CONTROL POWER TRANSFORMER	PMP	PUMP
CRN	CRANE	PNL	PANEL
		PRI	PRIMARY
DMP	DIGITAL METER PACKAGE		
DOP	DISSOLVED OXYGEN PROBE	R	RIGHT, REVERSE
DRV	DRIVE	RCPT	RECEPTACLE
		RDR	ROLL-UP DOOR
EF	EXHAUST FAN	RFI	RADIO FREQUENCY INTERFERENCE FILTER
ELEC	ELECTRICAL	RM	ROOM
EMH	ELECTRICAL MANHOLE	R/W	RAS/WAS
EP	EXPLOSION PROOF		
ES	EMERGENCY STOP	S	SLOW
EWH	ELECTRICAL WATER HEATER	SF	SUPPLY FAN
EXIST OR (E)	EXISTING	SGT	SLUICE GATE & SLIDE GATE
		SLR	SILENCER
F	FUTURE, FOWARD, FIRST	SPR	SPRAY
FACP	FIRE ALARM CONTROL PANEL	SSRV	SOLID STATE REDUCE VOLTAGE STARTER
FE	FLOW ELEMENT	SST	SOLID STATE TRIP
FIT	FLOW INDICATOR TRANSMITTER	SWGR	SWITCHGEAR
FLT	FILTER	SW	SWITCH
FLW	FLOW		
FLX	SEALTITE FLEXIBLE CONDUIT	T	TELEPHONE
FO	FIBER OPTIC CABLE	TB	TERMINAL BOX
		TEMP	TEMPERATURE
GEN	GENERATOR	TJB	TELEPHONE JUNCTION BOX
GFI	GROUND FAULT INTERRUPTER	TM	THERMAL MAGNETIC
GND	GROUND	TNK	TANK
GRC	GALVANIZED RIGID CONDUIT	TS	INSTRUMENT CABLE PAIR (#18 TWISTED SH.)
		TSH	TEMPERATURE SWITCH HIGH
HPS	HIGH PRESSURE SODIUM	TSP	THERMOSTAT
HPU	HEAT PUMP UNIT	TIT	TEMPERATURE INDICATOR TRANSMITTER
HS	HAND OPERATED SELECTOR SWITCH	TYP	TYPICAL
HTR	HEATER		
		U.G.	UNDER GROUND
INSTR	INSTRUMENTATION	U.O.N.	UNLESS OTHERWISE NOTED
IPB	INSTRUMENTATION PULL BOX	UPS	UNINTERRUPTED POWER SUPPLY
JB	JUNCTION BOX	VFD	VARIABLE FREQUENCY DRIVE
		VLV	VALVE
LA	LIGHTING ARRESTER	VSH	VIBERATION SWITCH HIGH
LCP	LOCAL CONTROL PANEL		
LO	LOCK OUT	WP	WEATHER PROOF
LS	LIMIT SWITCH		
MCC	MOTOR CONTROL CENTER	XFMR	TRANSFORMER
MCP	MOTOR CIRCUIT PROTECTOR		
MCS	MOTOR CONSTANT START		
MH	MANHOLE		
MLO	MAIN LUGS ONLY		
MTD	MOUNTED		
MV	MOTORIZED VALVE		
MVS	MOTOR VARIABLE START		
MXR	MIXER		

CONDUIT LEGEND

- PNL 4A — NEW EMBEDDED OR ENCASED HOMERUN WITH DESTINATION INDICATED
- PNL 4A — NEW EXPOSED HOMERUN WITH DESTINATION INDICATED
- NEW CONDUIT IN DUCTBANK, SLAB OR BELOW GRADE
- NEW EXPOSED CONDUIT
- CONDUIT BENDS TOWARD OBSERVER
- CONDUIT BENDS AWAY FROM OBSERVER
- EXISTING EXPOSED CONDUIT
- EXISTING CONDUIT IN DUCTBANK, SLAB OR BELOW GRADE
- CONDUIT CHANGE IN ELEVATION
- CONDUIT STUBBED-OUT AND CAPPED
- CONDUIT ENDS WITH INSULATED BUSHING UNLESS OTHERWISE NOTED
- FLEXIBLE CONDUIT
- SUBMERSIBLE CABLE

DEVICE, EQUIPMENT & TAG LEGEND

- a b c / d e f — CIRCUIT BREAKER
  - a = AMP FRAME d = DESIGNATION
  - b = NO. OF POLES e = TYPE
  - c = AMP TRIP f = INTERRUPTING RATING
  - * = s = SHUNT TRIP
  - = k = KIRK KEY INTERLOCK
  - = GFIC = GROUND FAULT CIRCUIT INTERRUPTER
  - = SKRU = SOLENOID KEY RELEASE
- 2 — MOTOR STARTER-NUMBER INDICATES NEMA SIZE
- 2F 2R — REVERSING MOTOR STARTER, SIZES AND DIRECTIONS INDICATED
- 2F 2S — TWO-SPEED MOTOR STARTER, SIZES AND DIRECTION INDICATED
- SSRV — SOLID STATE REDUCED VOLTAGE STARTER
- MCP 7 — MOTOR CIRCUIT PROTECTOR WITH CURRENT RATING
- 100AF 60AT — LOW VOLTAGE POWER CIRCUIT BREAKER, DRAW OUT TYPE WITH FRAME AND TRIP RATINGS INDICATED
- 1200AF 800AT — MEDIUM VOLTAGE POWER CIRCUIT BREAKER, DRAW OUT TYPE WITH FRAME AND TRIP RATINGS INDICATED
- 15A 1P — CIRCUIT BREAKER WITH TRIP RATING AND NUMBER OF POLES INDICATED (3-POLE UNLESS OTHERWISE NOTED)
- TRANSFORMER
- LA — LIGHTNING ARRESTOR
- 3 — CURRENT TRANSFORMER (QUANTITY INDICATED)
- 2 — POTENTIAL TRANSFORMER (QUANTITY INDICATED)
- A — AMMETER
- V — VOLTMETER
- DMP — DIGITAL METERING PACKAGE
- C EMD — ELECTRONIC MONITOR DEVICE WITH COMMUNICATION CARD
- 5 — MOTOR-NUMBER INDICATES HORSEPOWER
- OR — MOTOR SPACE HEATER
- VFD — VARIABLE FREQUENCY DRIVE
- K — KIRK-KEY INTERLOCK
- SST — SOLID STATE TRIP UNIT
- LLdV/dT — LOAD REACTOR dV/dT FILTER
- LR/HF — LINE REACTOR/HARMONIC FILTER
- VOLTAGE SURGE SUPPRESSER
- DIODE
- 27 — RELAY DEVICE (NUMBER REFERS TO ANSI/IEEE STD C37.2 DEVICE DESCRIPTION)
- * — INDICATES DEVICE LOCATED IN MCC OR PANELBOARD
- △ — INDICATES DEVICE LOCATED IN FIELD AT OR NEAR LOAD
- □ — INDICATES DEVICE LOCATED IN LOCAL PANEL
- ⊠ — INDICATES DEVICE LOCATED AT VFD DISPLAY PANEL
- INDICATES DEVICE LOCATED IN VFD
- BIMETALLIC THERMAL OVERLOAD RELAY
- TO PLC I/O RACK
- FUSE
- FUSE WITH BLOWN FUSE INDICATOR
- GROUND CONNECTION
- PANEL BOARD
- CR OR CR — CONTROL RELAY
- TR OR TR — TIME DELAY RELAY
- AR OR AR — ALARM RELAY
- ISR — INTRINSICALLY SAFE RELAY
- 1CR — NORMALLY OPEN CONTACT, RELAY COIL INDICATED
- 2CR — NORMALLY CLOSED CONTACT, RELAY COIL INDICATED
- PLC DISCRETE OUTPUT CONTACT
- 0 TO 30 SEC — TIME DELAY RELAY CONTACT (NORMALLY OPEN WITH TIME DELAYED CLOSING UPON COIL ENERGIZATION WITH TIME DELAY RANGE INDICATED)
- 0 TO 30 SEC — TIME DELAY RELAY CONTACT (NORMALLY CLOSED WITH TIME DELAYED OPENING UPON COIL ENERGIZATION WITH TIME DELAY RANGE INDICATED)
- 0 TO 30 SEC — TIME DELAY RELAY CONTACT (NORMALLY CLOSED WITH TIME DELAYED CLOSING UPON COIL DE-ENERGIZATION WITH TIME DELAY RANGE INDICATED)
- 0 TO 30 SEC — TIME DELAY RELAY CONTACT (NORMALLY OPEN WITH TIME DELAYED OPENING UPON COIL DE-ENERGIZATION WITH TIME DELAY RANGE INDICATED)
- M — MOTOR STARTER COIL (SCHEMATIC DIAGRAMS AND FLOOR PLANS ONLY)
- VS — VIBRATION SWITCH
- PI — PRESSURE INDICATOR
- XS OR XS — MOISTURE DETECTOR
- SD OR SD — SMOKE DETECTOR
- SV OR SV — SOLENOID VALVE
- T OR T — THERMOSTAT
- PC OR PC — PHOTOCELL
- TM OR TM — TIMER
- OR ZS — LIMIT OR POSITION SWITCH
- OR PS — PRESSURE SWITCH
- OR FS — FLOW SWITCH
- OR TS — TEMPERATURE SWITCH
- OR LS — LEVEL SWITCH
- OR — START PUSHBUTTON
- OR — STOP PUSHBUTTON
- OR — STOP PUSHBUTTON WITH LOCKOUT
- OR — SELECTOR SWITCH
- OR — RESET SWITCH
- JOG - PUSHBUTTON
- R OR — INDICATING LIGHT-LETTER DENOTES COLOR (SCHEMATIC OR ELEVATION ONLY) A=AMBER, R=RED, W=WHITE, G=GREEN
- CONDUCTOR CONNECTED
- CONDUCTOR NOT CONNECTED
- RTM — RUNNING TIME METER
- PENDANT OR CEILING MOUNTED LIGHTING FIXTURE
- WALL MOUNTED LIGHTING FIXTURE
- POLE OR STANCHION MOUNTED LIGHTING FIXTURE
- DUAL HEAD EMERGENCY LIGHTING UNIT WITH BATTERY PACK
- EXIT LIGHTING FIXTURE-DARKENED QUADRANT INDICATES ILLUMINATED FACE; ARROW INDICATES DIRECTION
- PENDANT OR CEILING MOUNTED FLUORESCENT LIGHTING FIXTURE
- PENDANT OR CEILING MOUNTED FLUORESCENT LIGHTING FIXTURE (UNSWITCHED)
- OR — DISCONNECT SWITCH
- $ OR S — SINGLE POLE SWITCH
- $3 OR S3 — THREE WAY SWITCH
- $M OR SM — MANUAL STARTER
- LOCALLY MTD STARTER OR CONTROLLER
- MV — MOTORIZED VALVE
- INTRUSION ALARM CONTACT
- COMPUTER OUTLET
- TELEPHONE OUTLET
- DUPLEX RECEPTACLE
- RECEPTACLE 250 VOLT
- SIMPLEX RECEPTACLE
- 600V, 60A — RECEPTACLE, RATING INDICATED
- J OR J — JUNCTION BOX
- EXPOSED GROUNDING CABLE
- BURIED OR CONCRETE ENCASED GROUNDING CABLE
- GROUNDING CABLE EXOTHERMIC WELDED CONNECTION
- GROUND ROD IN GROUND WELL
- NEMA 4X — INDICATES ALL MATERIALS, EQUIPMENT AND INSTALLATION SHALL BE SUITABLE FOR OUTDOOR LOCATION OR WET, CORROSIVE ENVIRONMENT.
- NEMA 7 — INDICATES ALL MATERIALS, EQUIPMENT AND INSTALLATION SHALL BE SUITABLE FOR CLASS I , DIVISION 1 HAZARDOUS AREA
- 02-PMP-001 — EQUIPMENT TAG
  - EQUIPMENT NUMBER
  - EQUIPMENT TYPE
  - PROCESS AREA
- A 8 3/40 12'-0" —
  - FIXTURE TYPE (SEE DRAWINGS FOR LIGHTING FIXTURE SCHEDULE)
  - NO. OF FIXTURES (ONE IF UNMARKED)
  - NUMBER OF LAMPS/LAMP WATTAGE
  - MOUNTING ELEVATION (ABOVE FINISHED FLOOR OR GRADE)

REV	DATE	BY	DESCRIPTION
			RECORD DRAWINGS

DESIGNED GRS
DRAWN PMT
CHECKED KAO
DATE MAY 2012

DISCIPLINE ENGINEER: ** ORIGINAL SEALED BY ANTHONY L. MORRONI 11/30/11 E012875 **
PROJECT ENGINEER: ** ORIGINAL SEALED BY DARREN G. BAUNE 11/30/11 No. C68899 **
VICE PRESIDENT: ** ORIGINAL SEALED BY MICHAEL JAMES BRITTEN 11/30/11 No. C27729 **

carollo

CITY OF TURLOCK INC. 1908
STANISLAUS COUNTY, CALIFORNIA

HARDING DRAIN BYPASS
PUMP STATION AND PIPELINE
ELECTRICAL
GENERAL
LEGEND AND ABBREVIATIONS

VERIFY SCALES
BAR IS ONE INCH ON ORIGINAL DRAWING
0 — 1"
IF NOT ONE INCH ON THIS SHEET, ADJUST SCALES ACCORDINGLY

JOB NO. 6918B.10
DRAWING NO. GE01
SHEET NO. 78 OF 107

Last Saved By: $(GETPROP)??
FILENAME: c:\pw_working\projectwise\crollins\dms60443\G-BDR 6-03-14 02:47pm CRollins XREFS: $(XREFS)??

NOTES

1. PROVIDE NEW CONDUIT TO UTILITY SERVICE POLE AS REQUIRED BY SERVING UTILITY, TURLOCK IRRIGATION DISTRICT (TID). IN addition TO DISTANCE SHOWN ON PLANS, PROVIDE AN ADDITIONAL 200 FT. OF U.G. DUCT BANK FOR UTILITY SERVICE REQUIREMENTS.

2. CONTRACTOR TO COORDINATE WITH UTILITY COMPANY FOR TRANSFORMER PAD DIMENSIONS. ENSURE TRANSFORMER PAD AND CONDUIT LAYOUT IS SUITABLE FOR A TRANSFOMER SIZED FOR A FUTURE 1600A SERVICE.

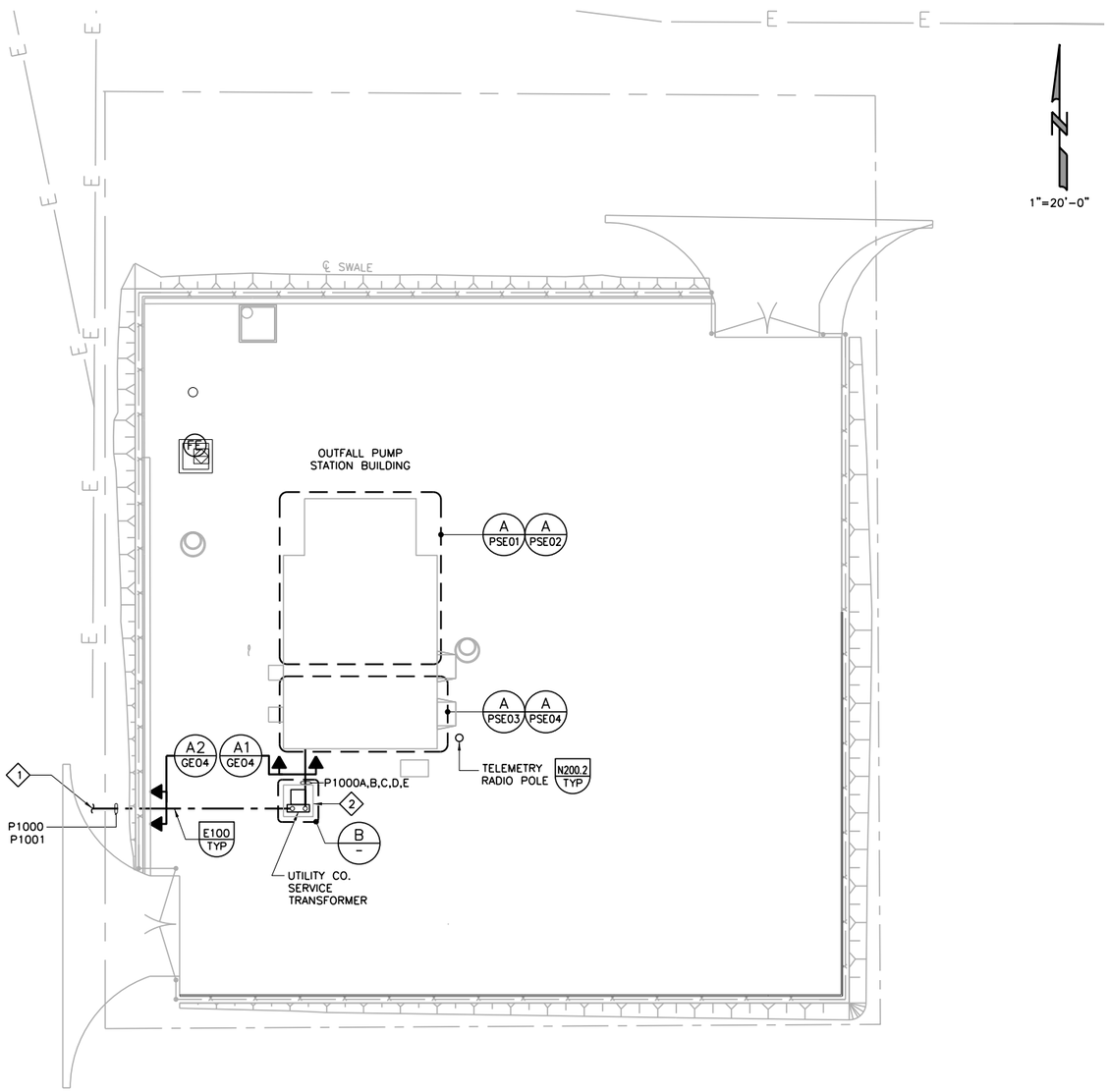

A - OUTFALL PUMP STATION SITE PLAN

SCALE: 1"=20'-0"
FILE: –

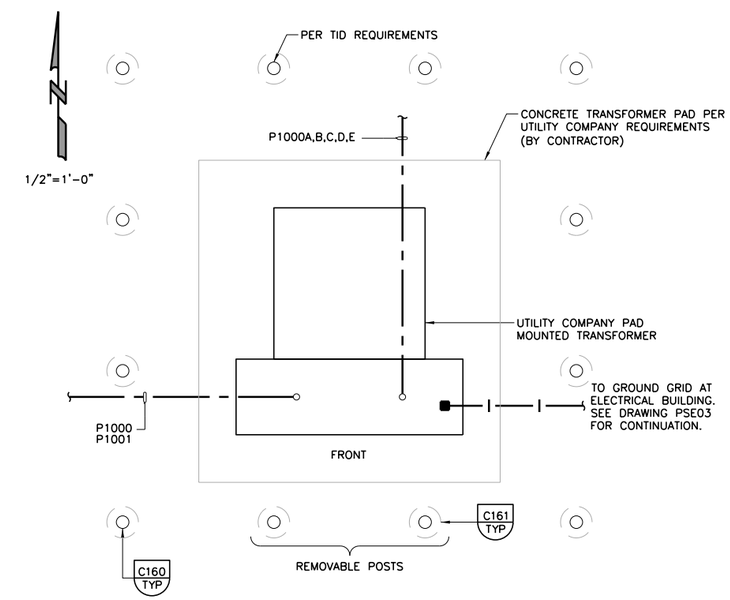

B - TRANSFORMER & PAD DETAIL

SCALE: 1/2" = 1'-0"
FILE: –

REV	DATE	BY	DESCRIPTION
			RECORD DRAWINGS

DESIGNED GRS
DRAWN PMT
CHECKED KAO
DATE MAY 2012

DISCIPLINE ENGINEER: ORIGINAL SEALED BY ANTHONY L. MORRONI 11/30/11 E012875
PROJECT ENGINEER: ORIGINAL SEALED BY DARREN G. BAUNE 11/30/11 No. C68899
VICE PRESIDENT: ORIGINAL SEALED BY MICHAEL JAMES BRITTEN 11/30/11 No. C27729

carollo

CITY OF TURLOCK INC. 1908
STANISLAUS COUNTY, CALIFORNIA

HARDING DRAIN BYPASS
PUMP STATION AND PIPELINE
ELECTRICAL
OUTFALL PUMP STATION SITE PLAN

VERIFY SCALES
BAR IS ONE INCH ON ORIGINAL DRAWING
0 1"
IF NOT ONE INCH ON THIS SHEET, ADJUST SCALES ACCORDINGLY

JOB NO. 6918B.10
DRAWING NO. GE02
SHEET NO. 79 OF 107

FILENAME: c:\pw_working\projectwise\crollins\dms60443\G-BDR 6-09-14 01:37pm CRollins XREFS: $(XREFS)??
Last Saved By: $(GETPROP)??

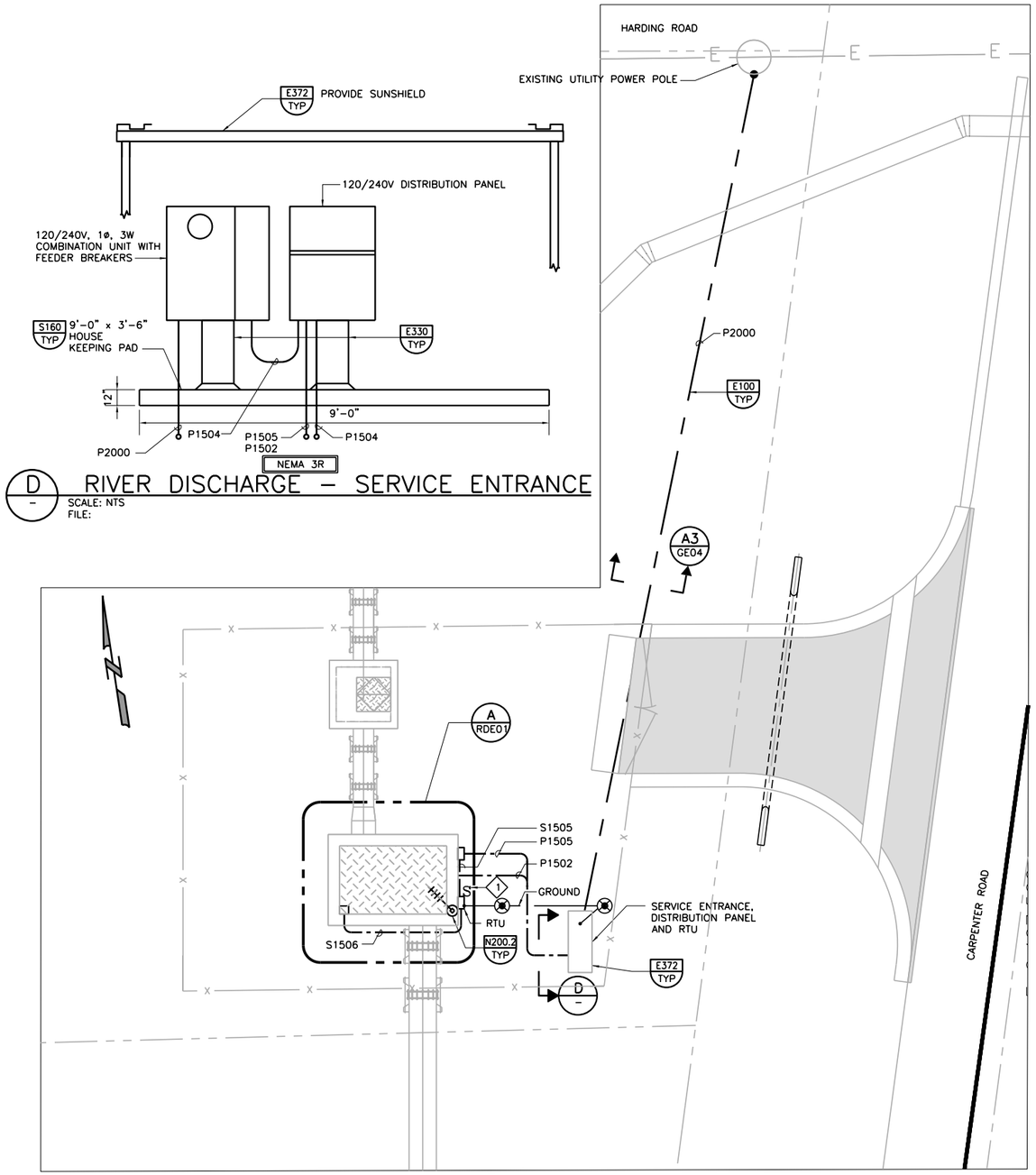

AVOID CUTTING UNDERGROUND UTILITY LINES. IT'S COSTLY.
Call before you Dig
1-800-227-2600
UNDERGROUND SERVICE (USA)

NOTES

1. WEATHER PROOF LIGHT SWITCH FOR LIGHTS AT STAND PIPE STRUCTURE.

REV	DATE	BY	DESCRIPTION

RECORD DRAWINGS

DESIGNED GRS
DRAWN CJL
CHECKED KOA
DATE MAY 2012

DISCIPLINE ENGINEER: ORIGINAL SEALED BY ANTHONY L. MORRONI 11/30/11 E012875
PROJECT ENGINEER: ORIGINAL SEALED BY DARREN G. BAUNE 11/30/11 No. C68899
VICE PRESIDENT: ORIGINAL SEALED BY MICHAEL JAMES BRITTEN 11/30/11 No. C27729

carollo

CITY OF TURLOCK INC. 1908
STANISLAUS COUNTY, CALIFORNIA

HARDING DRAIN BYPASS
PUMP STATION AND PIPELINE
ELECTRICAL
OUTFALL STANDPIPE AND OUTFALL STRUCTURE SITE PLAN

VERIFY SCALES
BAR IS ONE INCH ON ORIGINAL DRAWING
0 1"
IF NOT ONE INCH ON THIS SHEET, ADJUST SCALES ACCORDINGLY

JOB NO. 6918B.10
DRAWING NO. GE03
SHEET NO. 80 OF 107

Last Saved By: $(GETPROP)??
FILENAME: c:\pw_working\projectwise\crollins\dms60443\G-BDR 6-08-14 01:43pm CRollins XREFS: $(XREFS)??

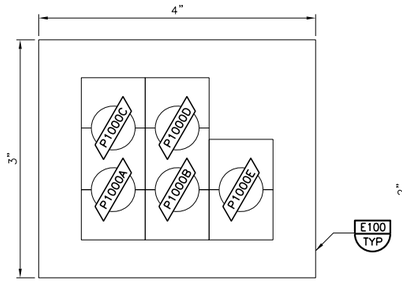

A1 GE02 SECTION
N.T.S.

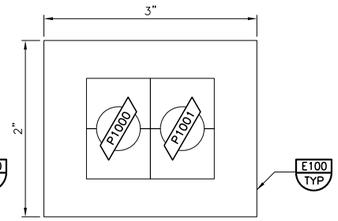

A2 GE02 SECTION
N.T.S.

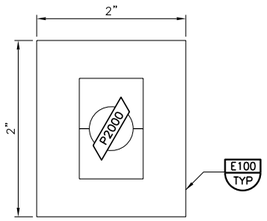

A3 GE03 SECTION
N.T.S.

LIGHTING FIXTURE SCHEDULE

SYMBOL	MANUFACTURER	CATALOG NO.	ALTERNATE MANUFACTURER	CATALOG NO.	DESCRIPTION	LAMP	VOLTAGE	MOUNTING
A 3/32	PARAMOUNT	HC6-332-3-EB-M1-S4-120V	MORLITE	EQUAL	4'-0" CRAFT LIGHT WITH STAINLESS STEEL COMPONENTS TRANSLUCENT, ACRYLIC LENS, AND ELECTRONIC BALLAST	(3) FO32/T8	120V	PENDANT
E1 2/50	LIGHTGUARD	GTN100-XEG-2-TD1	EQUAL	EQUAL	HEAVY DUTY INDUSTRIAL EMERGENCY LIGHTING FIXTURE WITH TWO (2) LIGHTING HEADS. LIGHTING HEADS SHALL CONSIST OF SEALED BEAM TUNGSTEN LAMPS OF 12 VOLTS, 50 WATTS EACH. BATTERIES SHALL BE SEALED, MAINTENANCE FREE, AND RATED FOR A MINIMUM OF 90 MINUTES. TIME DELAY SHALL BE PROVIDED TO MAINTAIN EMERGENCY LIGHTING FOR FIVE MINUTES AFTER POWER RESTORATION.	(2)50W INCAN.	120V	WALL
L 300	HOLOPHANE	HBQ-5-22-Y-N-NNN-OL 150-2-U-LPS841	G.E.	EQUAL	HBQ FIXTURE WITH INDUCTION LAMP TECHNOLOGY. PROVIDE GRIPPLE HANDING KIT.	(2) 150W INDUCTION	120V	PENDANT
W1 100	BEGA	2479MH	NO EQUAL	EQUAL	WALL MOUNTED LUMINAIRE WITH CONCEALED LIGHT SOURCE AND ANODIZED ALUMINUM REFLECTOR. STIPPLED TEMPERED GLASS BEHIND DIE CAST ALUMINUM LOUVERS WALL MOUNTED.	100W MH	120V	SURFACE MOUNTED
X -	HOLOPHANE	MCAE-L-NC-A-AG-S-N	EQUAL	EQUAL	EXIT SIGN, DIE CAST ALUMINUM FRAME, SLIM PROFILE WITH SOFT ROUNDED CORNERS EDGES, COMPACT LED AND WITH SEALED NICKEL CADIUM BATTERIES AT 90 MINUTES OF OPERATION.	--	120V	WALL SINGLE FACE

LIGHTING PANEL AT STANDPIPE — 10/26/2011

LOCATION: STANDPIPE
VOLTS: 240 / 120
PHASE & WIRE: 1PH 3W
INTERRUPT: 18 KAIC

NEMA: 3R
FEED: BOTTOM
MTG. SURFACE
BUS RATING: 100
MAIN: CB
MAIN RATING: 100 AF 100 AT

PH A WEIGHTED VA 1345
PH B WEIGHTED VA 125
EQUIP SIZING VA 2690
PANEL AMPS 11.2

I/C/F	DESCRIPTION	LOAD (VA)	BKR	CIR	ø	CIR	BKR	LOAD (VA)	DESCRIPTION	I/C/F
I	RECEPTACLES (P1502)	360	20A	1	A	2	20A	500	LIGHTS	C
C	AIT-3930 (P1505)	100	20A	3	B	4	20A		SPARE	
I	RECEPTACLES @ RTU (P4002)	360	20A	5	A	6	20A		SPARE	
	SPARE		20A	7	B	8	20A		SPARE	
	SPARE		20A	9	A	10	20A		SPARE	
	SPARE		20A	11	B	12	20A		SPARE	

D – 'MPZ1' PANEL SCHEDULE

SCALE: NTS
FILE: –

DP-1 — 10/25/2011

LOCATION: OPS ELECTRICAL ROOM
VOLTS: 480
PHASE & WIRE: 3PH 3W
INTERRUPT: 35 KAIC

NEMA: 1
FEED: BOTTOM
MTG. SURFACE
BUS RATING: 150
MAIN: CB
MAIN RATING: 100 AF 100 AT

PH A WEIGHTED VA 12588
PH B WEIGHTED VA 12588
PH C WEIGHTED VA 12588
EQUIP SIZING VA 37764
PANEL AMPS 45.4

I/C/F	DESCRIPTION	LOAD (VA)	BKR	CIR	ø	CIR	BKR	LOAD (VA)	DESCRIPTION	I/C/F
I	OPS-FC-100	3824		1	A	2			SPARE	
I	OPS-FC-100	3824	15A-3P	3	B	4	20A-3P		SPARE	
I	OPS-FC-100	3824		5	C	6			SPARE	
I	OPS-AC-100	8764		7	A	8			SPARE	
I	OPS-AC-100	8764	20A-3P	9	B	10	20A-3P		SPARE	
I	OPS-AC-100	8764		11	C	12			SPARE	
	SPARE			13	A	14			SPACE	
	SPARE		20A-3P	15	B	16			SPACE	
	SPARE			17	C	18			SPACE	
	SPARE			19	A	20			SPACE	
	SPARE		20A-3P	21	B	22			SPACE	
	SPARE			23	C	24			SPACE	
	SPACE			25	A	26			SPACE	
	SPACE			27	B	28			SPACE	
	SPACE			29	C	30			SPACE	

NOTES: UNLESS OTHERWISE NOTED, ALL CIRCUITS SHALL BE 2#12, #12G, IN 3/4"C.

B – 'DP-1' PANEL SCHEDULE

SCALE: NTS
FILE: –

LP-A — 4/30/2012

LOCATION: OPS ELECTRICAL ROOM
VOLTS: 208 / 120
PHASE & WIRE: 3PH 4W
INTERRUPT: 22 KAIC

NEMA: 1
FEED: BOTTOM
MTG. SURFACE
BUS RATING: 150
MAIN: CB
MAIN RATING: 125 AF 100 AT

PH A WEIGHTED VA 5778
PH B WEIGHTED VA 5253
PH C WEIGHTED VA 4025
EQUIP SIZING VA 17334
PANEL AMPS 48.1

I/C/F	DESCRIPTION	LOAD (VA)	BKR	CIR	ø	CIR	BKR	LOAD (VA)	DESCRIPTION	I/C/F
C	LIGHTS - ELECTRICAL ROOM (P1147)	1074	20A-1P	1	A	2	20A-1P	540	RECEPTACLES (P1144)	I
	SPARE		20A-1P	3	B	4	20A-1P	500	RTU ENCLOSURE (P1145)	C
C	LIGHTS - EXTERIOR (P1204)	550	20A-1P	5	C	6	20A-1P	500	PLC/RADIO ENCLOSURE (P1146)	C
	EMERGENCY PUMP LIGHTS		20A-1P	7	A	8	20A-1P	500	OPS-EF-200 (P1110)	C
C	EXIT LIGHTS	200	20A-1P	9	B	10	20A-1P	500	OPS-EF-100 (P1111)	C
	SPARE		20A-1P	11	C	12	20A-1P	720	RECEPTACLES (P1142)	I
C	LIGHTS - PUMP ROOM	1650	20A-1P	13	A	14	20A-1P	720	RECEPTACLES (P1142)	I
C	LIGHTS - PUMP ROOM	1320	20A-1P	15	B	16	20A-1P	360	RECEPTACLES (P1143)	I
C	CONTROL POWER LSL, LSLL	100	20A-1P	17	C	18	20A-1P	100	OPS-LIT-2901A (P1107)	C
C	VSH-2920 (P1101C)	150	20A-1P	19	A	20	20A-1P	100	OPS-LIT-2901B (P1107)	C
C	VSH-2921 (P1102C)	150	20A-1P	21	B	22	20A-1P	240	DOOR ALARM SECURITY PANEL (P1301)	C
C	VSH-2922 (P1103C)	150	20A-1P	23	C	24	20A-1P	100	OPS-FIT-2931 (P1112)	C
C	VSH-2923 (P1104C)	150	20A-1P	25	A	26	20A-1P		SPARE	
	OPS-PUM-500	1144	20A-2P	27	B	28	20A-1P		SPARE	
	OPS-PUM-500	1144		29	C	30	20A-1P		SPARE	

NOTE: CIRCUITS 5, 13, AND 15 SHALL CONSIST OF #10 CONDUCTOR.

C – 'LP-A' PANEL SCHEDULE

SCALE: NTS
FILE: –

REV	DATE	BY	DESCRIPTION

RECORD DRAWINGS

DESIGNED GRS
DRAWN PMT
CHECKED KAO
DATE MAY 2012

DISCIPLINE ENGINEER: ORIGINAL SEALED BY ANTHONY L. MORRONI 11/30/11 E012875
PROJECT ENGINEER: ORIGINAL SEALED BY DARREN G. BAUNE 11/30/11 No. C68899
VICE PRESIDENT: ORIGINAL SEALED BY MICHAEL JAMES BRITTEN 11/30/11 No. C27729

carollo

CITY OF TURLOCK INC. 1908
STANISLAUS COUNTY, CALIFORNIA

HARDING DRAIN BYPASS
PUMP STATION AND PIPELINE
ELECTRICAL
GENERAL
DUCT BANK SECTIONS & SCHEDULES

VERIFY SCALES
BAR IS ONE INCH ON ORIGINAL DRAWING
0 1"
IF NOT ONE INCH ON THIS SHEET, ADJUST SCALES ACCORDINGLY

JOB NO. 6918B.10
DRAWING NO. GE04
SHEET NO. 81 OF 107

Last Saved By: $(GETPROP)??
FILENAME: c:\pw_working\projectwise\crollins\dms60443\G-BDR 6-03-14 02:47pm CRollins XREFS: $(XREFS)??

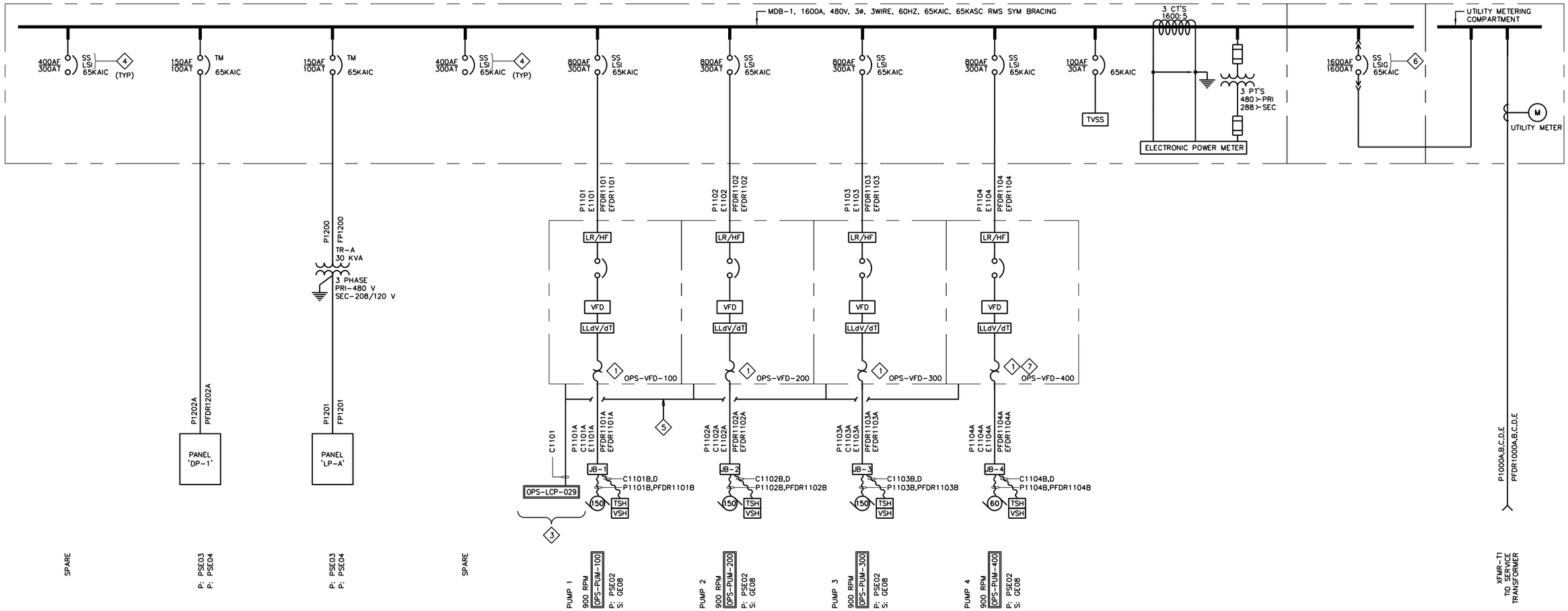

A – MDB-1 SINGLE LINE DIAGRAM – OUTFALL PUMP STATION 2

SCALE: NTS
FILE:

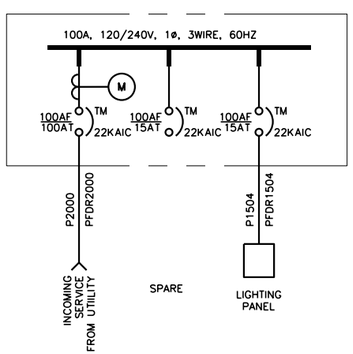

B – SINGLE LINE DIAGRAM – RIVER DISCHARGE STRUCTURE

SCALE: NTS
FILE:

NOTES

1. CONTRACTOR SHALL COORDINATE AND SIZE OVERLOAD HEATER FOR THE ACTUAL MOTOR SUPPLIED BASED UPON THAT MOTORS NAMEPLATE RATING.
2. NOT USED.
3. E-STOPS LOCATED IN OPS-LCP-029
4. SS = SOLID STATE
   LSI = LONG TIME, SHORT TIME, INSTANTANEOUS TRIPPING FUNCTIONS.
5. VIA TRENCH
6. SS = SOLID STATE
   LSIG = LONG TIME, SHORT TIME, INSTANTANEOUS GROUND FAULT TRIP.
7. PROVIDE COMPLETE VFD AND BYPASS SIZED FOR 150HP, WITH MOTOR OVERLOAD PROTECTION SUITABLE FOR 60HP. IN THE FUTURE OPS-PUM-400 WILL BE CHANGED TO 150 HP.

REV	DATE	BY	DESCRIPTION
			RECORD DRAWINGS

DESIGNED GRS
DRAWN PMT
CHECKED KAO
DATE MAY 2012

DISCIPLINE ENGINEER: ORIGINAL SEALED BY ANTHONY L. MORRONI 11/30/11 E012875
PROJECT ENGINEER: ORIGINAL SEALED BY DARREN G. BAUNE 11/30/11 No. C68899
VICE PRESIDENT: ORIGINAL SEALED BY MICHAEL JAMES BRITTEN 11/30/11 No. C27729

carollo

CITY OF TURLOCK INC. 1908
STANISLAUS COUNTY, CALIFORNIA

HARDING DRAIN BYPASS
PUMP STATION AND PIPELINE
ELECTRICAL
SINGLE LINE DIAGRAM

VERIFY SCALES
BAR IS ONE INCH ON ORIGINAL DRAWING
0 1"
IF NOT ONE INCH ON THIS SHEET, ADJUST SCALES ACCORDINGLY

JOB NO. 6918B.10
DRAWING NO. GE05
SHEET NO. 82 OF 107

Last Saved By: $(GETPROP)??
FILENAME: c:\pw_working\projectwise\crollins\dms60443\G-BDR 6-03-14 02:47pm CRollins XREFS: $(XREFS)??

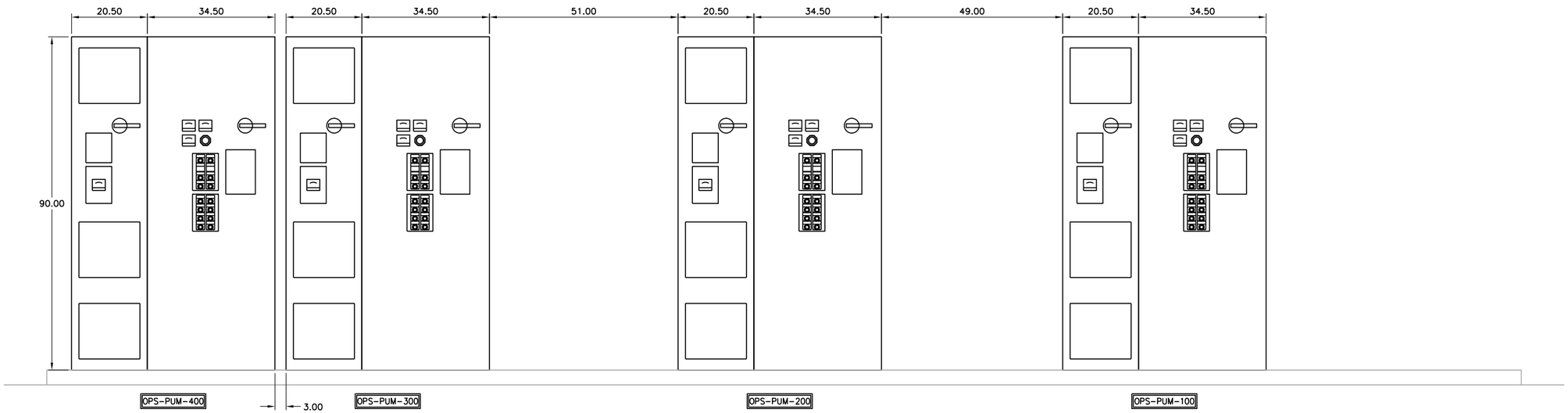

A PSE03 PSE04 VFD ELEVATION
SCALE: 3/4"=1'-0"
FILE:

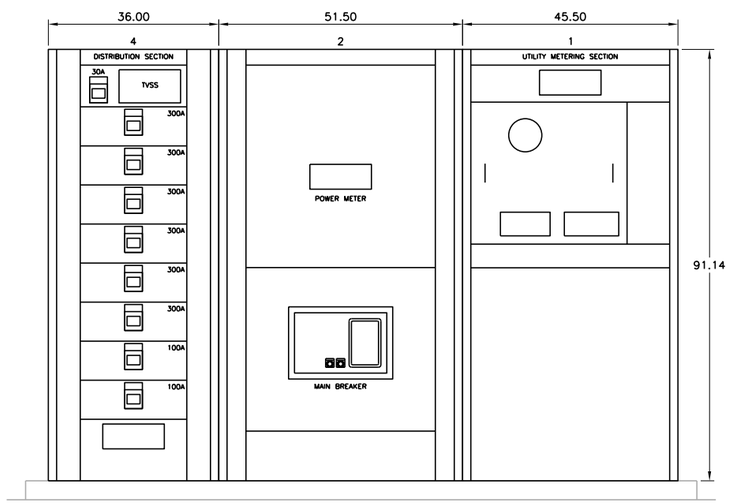

B PSE03 PSE04 MDB-1 ELEVATION
SCALE: 3/4"=1'-0"
FILE:

REV	DATE	BY	DESCRIPTION

RECORD DRAWINGS

DESIGNED GRS
DRAWN PMT
CHECKED KAO
DATE MAY 2012

DISCIPLINE ENGINEER: ORIGINAL SEALED BY ANTHONY L. MORRONI 11/30/11 E012875
PROJECT ENGINEER: ORIGINAL SEALED BY DARREN G. BAUNE 11/30/11 No. C68899
VICE PRESIDENT: ORIGINAL SEALED BY MICHAEL JAMES BRITTEN 11/30/11 No. C27729

carollo

CITY OF TURLOCK INC. 1908
STANISLAUS COUNTY, CALIFORNIA

HARDING DRAIN BYPASS
PUMP STATION AND PIPELINE
ELECTRICAL
GENERAL
SWITCHGEAR & VFD ELEVATIONS

VERIFY SCALES
BAR IS ONE INCH ON ORIGINAL DRAWING
0 1"
IF NOT ONE INCH ON THIS SHEET, ADJUST SCALES ACCORDINGLY

JOB NO. 6918B.10
DRAWING NO. GE06
SHEET NO. 83 OF 107

Last Saved By: $(GETPROP)??
FILENAME: c:\pw_working\projectwise\crollins\dms60443\G-BDR 6-03-14 03:14pm CRollins XREFS: $(XREFS)??

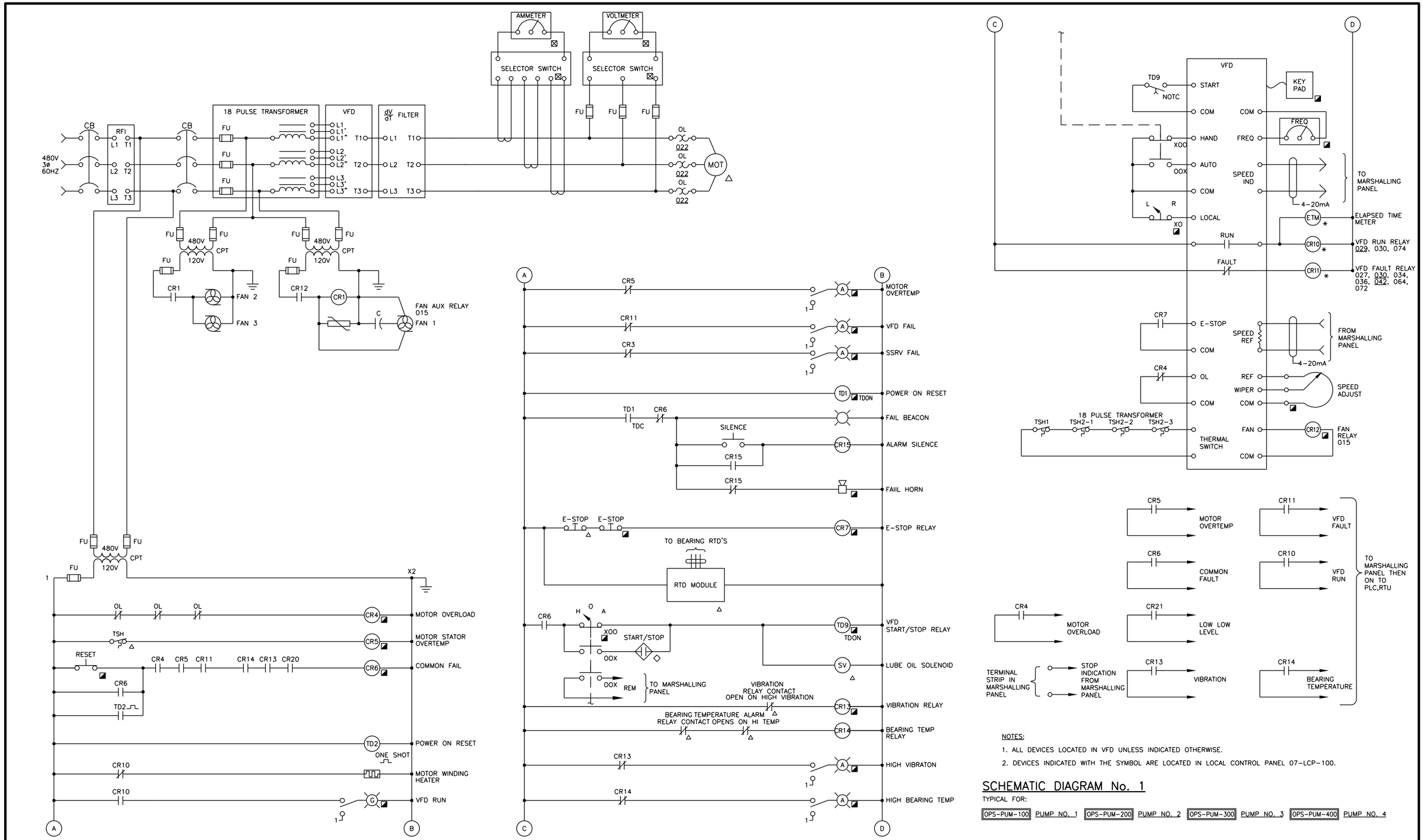

NOTES:

1. ALL DEVICES LOCATED IN VFD UNLESS INDICATED OTHERWISE.
2. DEVICES INDICATED WITH THE SYMBOL ARE LOCATED IN LOCAL CONTROL PANEL 07-LCP-100.

SCHEMATIC DIAGRAM No. 1

TYPICAL FOR:

OPS-PUM-100 PUMP NO. 1 | OPS-PUM-200 PUMP NO. 2 | OPS-PUM-300 PUMP NO. 3 | OPS-PUM-400 PUMP NO. 4

REV	DATE	BY	DESCRIPTION

RECORD DRAWINGS

DESIGNED GRS
DRAWN PMT/CJL
CHECKED KAO
DATE MAY 2012

DISCIPLINE ENGINEER: ORIGINAL SEALED BY ANTHONY L. MORRONI 11/30/11 E012875

PROJECT ENGINEER: ORIGINAL SEALED BY DARREN G. BAUNE 11/30/11 No. C68899

VICE PRESIDENT: ORIGINAL SEALED BY MICHAEL JAMES BRITTEN 11/30/11 No. C27729

carollo

CITY OF TURLOCK INC. 1908
STANISLAUS COUNTY, CALIFORNIA

HARDING DRAIN BYPASS
PUMP STATION AND PIPELINE
ELECTRICAL
CONTROL SCHEMATICS

VERIFY SCALES
BAR IS ONE INCH ON ORIGINAL DRAWING
0 1"
IF NOT ONE INCH ON THIS SHEET, ADJUST SCALES ACCORDINGLY

JOB NO. 6918B.10
DRAWING NO. GE07
SHEET NO. 84 OF 107

Last Saved By: $(GETPROP)??
FILENAME: c:\pw_working\projectwise\crollins\dms60443\G-BDR 7-21-14 07:37am CRollins XREFS: $(XREFS)??

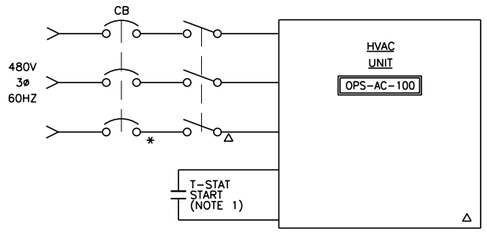

SCHEMATIC DIAGRAM No. 2

TYPICAL FOR:

OPS-AC-100 HVAC UNIT

NOTES

1. STARTER LOCATED IN PACKAGED UNIT.

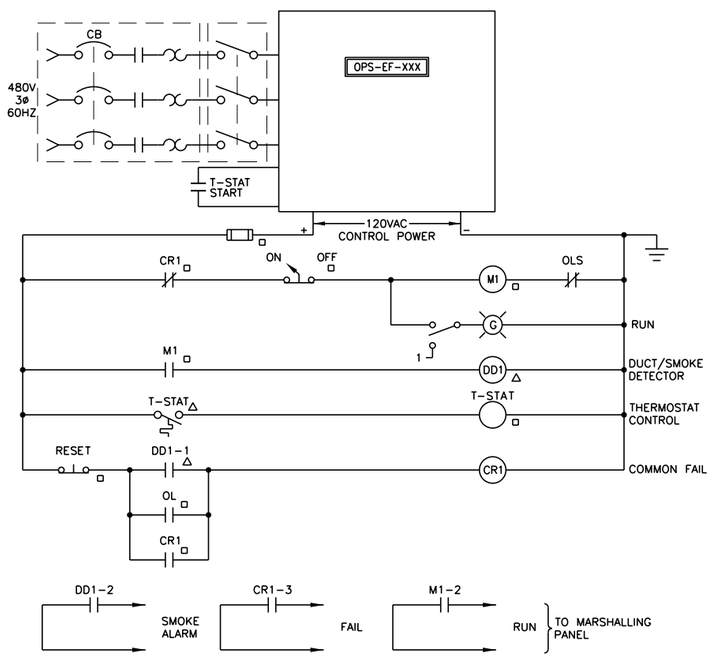

SCHEMATIC DIAGRAM No. 3

TYPICAL FOR:

OPS-EF-100 EXHAUST FAN OPS-EF-200 EXHAUST FAN

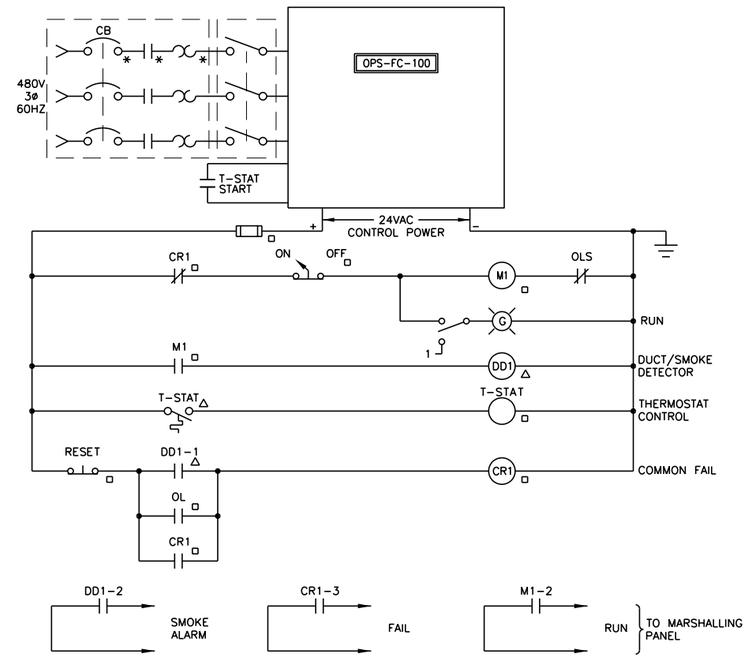

SCHEMATIC DIAGRAM No. 4

TYPICAL FOR:

OPS-FC-100 FAN COIL UNIT

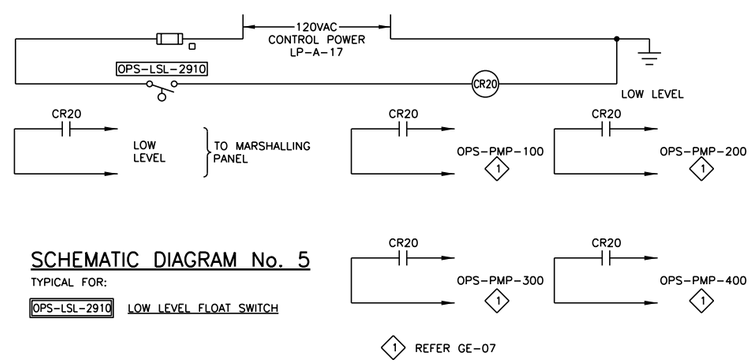

SCHEMATIC DIAGRAM No. 5

TYPICAL FOR:

OPS-LSL-2910 LOW LEVEL FLOAT SWITCH

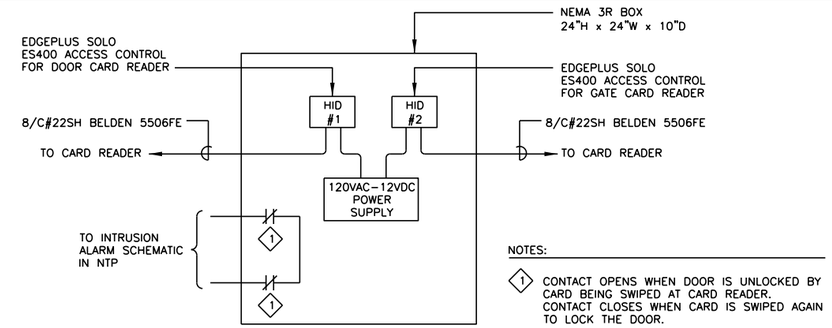

SCHEMATIC DIAGRAM No. 6

TYPICAL FOR:

OPS-VCP-001 CARD READERS CONTROL PANEL

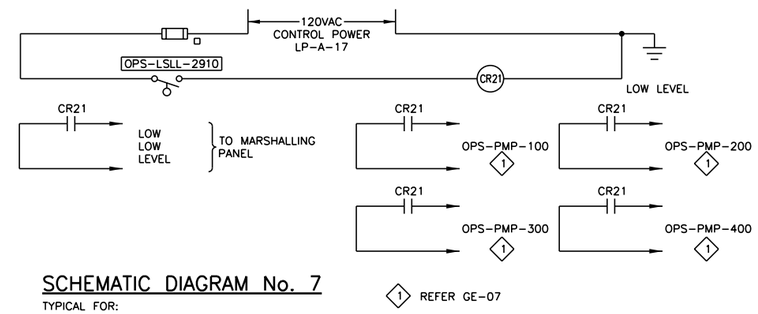

SCHEMATIC DIAGRAM No. 7

TYPICAL FOR:

OPS-LSLL-2910

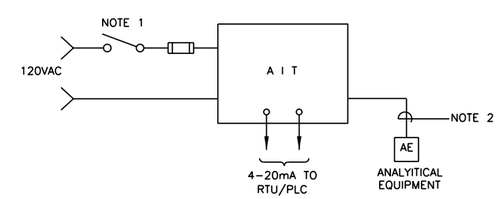

SCHEMATIC DIAGRAM No. 8

TYPICAL FOR:

AIT-3930 DO ANALYZER AT STANDPIPE

NOTES

1. WHERE SWITCHES ARE MOUNTED OUTDOORS THEY SHALL BE WEATHER PROOF.
2. CABLE SHALL BE PER MANUFACTURER'S REQUIREMENTS.

REV	DATE	BY	DESCRIPTION
			RECORD DRAWINGS

DESIGNED GRS
DRAWN PMT
CHECKED KAO
DATE MAY 2012

DISCIPLINE ENGINEER: ORIGINAL SEALED BY ANTHONY L. MORRONI 11/30/11 E012875

PROJECT ENGINEER: ORIGINAL SEALED BY DARREN G. BAUNE 11/30/11 No. C68899

VICE PRESIDENT: ORIGINAL SEALED BY MICHAEL JAMES BRITTEN 11/30/11 No. C27729

carollo

CITY OF TURLOCK INC. 1908

STANISLAUS COUNTY, CALIFORNIA

HARDING DRAIN BYPASS
PUMP STATION AND PIPELINE
ELECTRICAL
CONTROL SCHEMATICS

VERIFY SCALES
BAR IS ONE INCH ON ORIGINAL DRAWING
0 1"
IF NOT ONE INCH ON THIS SHEET, ADJUST SCALES ACCORDINGLY

JOB NO. 6918B.10
DRAWING NO. GE08
SHEET NO. 85 OF 107

Last Saved By: $(GETPROP)??

FILENAME: c:\pw_working\projectwise\crollins\dms60443\G-BDR 6-03-14 02:47pm CRollins XREFS: $(XREFS)??

Last Saved By: $(GETPROP)??

REV	DATE	BY	DESCRIPTION
			RECORD DRAWINGS

DESIGNED GRS
DRAWN CJL
CHECKED KAO
DATE MAY 2012

DISCIPLINE ENGINEER
••
ORIGINAL
SEALED BY
ANTHONY L. MORRONI
11/30/11
E012875
••

PROJECT ENGINEER
••
ORIGINAL
SEALED BY
DARREN G. BAUNE
11/30/11
No. C68899
••

VICE PRESIDENT
••
ORIGINAL
SEALED BY
MICHAEL JAMES BRITTEN
11/30/11
No. C27729
••

carollo

CITY OF TURLOCK INC. 1908
STANISLAUS COUNTY, CALIFORNIA

HARDING DRAIN BYPASS
PUMP STATION AND PIPELINE
ELECTRICAL
CONTROL SCHEMATICS

VERIFY SCALES
BAR IS ONE INCH ON ORIGINAL DRAWING
0 1"
IF NOT ONE INCH ON THIS SHEET, ADJUST SCALES ACCORDINGLY

JOB NO. 6918B.10
DRAWING NO. GE09
SHEET NO. 86 OF 107

FILENAME: c:\pw_working\projectwise\crollins\dms60443\G-BDR 6-03-14 02:47pm CRollins XREFS: $(XREFS)??

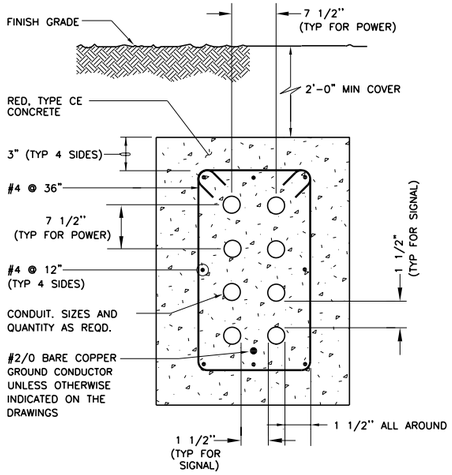

NOTE:

1. DIMENSIONS ARE MINIMUM UNLESS OTHERWISE INDICATED ON THE DRAWINGS.

E100 TYP — REINFORCED ENCASEMENT FOR ELECTRICAL CONDUITS (S)

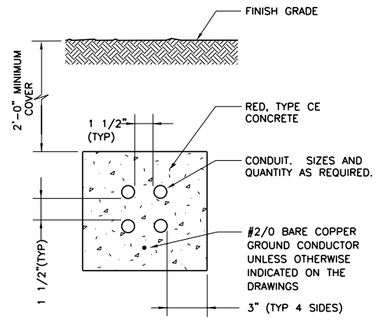

NOTES:

1. DIMENSIONS ARE MINIMUM UNLESS OTHERWISE INDICATED ON THE DRAWINGS.
2. THIS ENCASEMENT FOR NON-TRAFFIC AREAS ONLY, OR WHERE SPECIFICALLY INDICATED ON THE DRAWINGS.

E102 TYP — UNREINFORCED ENCASEMENT FOR ELECTRICAL CONDUITS (S)

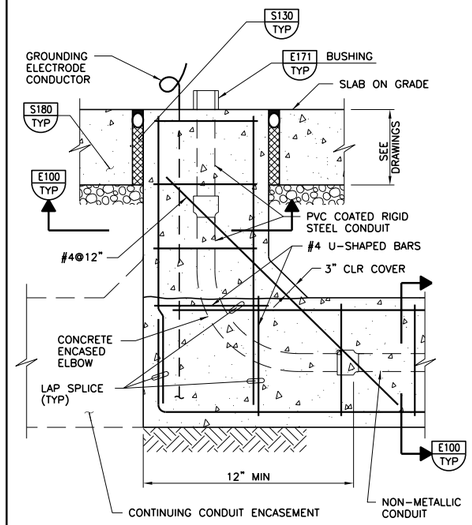

E108 TYP — RISER FROM NON-METALLIC DUCT FOR SLAB ON GRADE (N) 08-01-04C

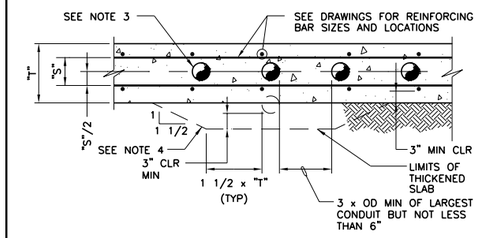

DOUBLE MAT REINFORCEMENT

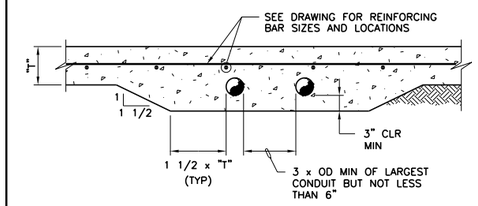

SINGLE MAT REINFORCEMENT

NOTES:

1. OD = OUTSIDE DIAMETER OF CONDUIT.
2. "S" = CLEAR SPACE BETWEEN REINFORCING.
3. MAX OD = SMALLER OF "T"/4 OR "S"-1/2".
4. FOR OD GREATER THAN "T"/4 OR "S"-1/2", PLACE CONDUIT UNDER SLAB AND ENCASE IN CONCRETE.
5. METAL CONDUITS SHALL BE ISOLATED WITH 3 WRAPS OF 10 MIL PVC TAPE AT THE POINT OF CONTACT WITH REINFORCING.

E134 TYP — CONDUITS EMBEDDED IN CONCRETE SLAB ON GRADE

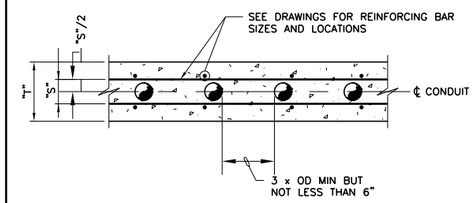

NOTES:

1. OD = OUTSIDE DIAMETER OF CONDUIT.
2. "S" = CLEAR SPACE BETWEEN REINFORCING.
3. MAX OD = SMALLER OF "T"/4 OR "S"-1/2".
4. CONDUITS IN SLAB WHICH IS PARALLEL TO BEAMS AND WALLS SUPPORTING THE SLAB SHALL NOT BE PLACED CLOSER THAN 4 x "T" FROM THE FACE OF THE BEAMS OR WALLS.
5. CONDUITS CROSSING SUPPORTING BEAMS SHALL BE INSTALLED PERPENDICULAR TO THE BEAM.
6. METAL CONDUITS SHALL BE ISOLATED WITH 3 WRAPS OF 10 MIL PVC TAPE AT THE POINT OF CONTACT WITH REINFORCING.

E136 TYP — CONDUITS EMBEDDED IN ELEVATED CONCRETE SLAB OR WALL

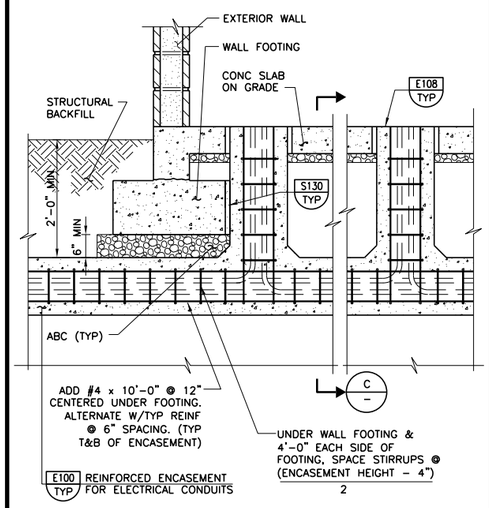

A/- SECTION - EXTERIOR WALL FOOTING

E152 TYP (N) — ENCASED ELECTRICAL CONDUITS LOCATED UNDER STRUCTURES — SHEET 1 OF 3 — 08-01-04C

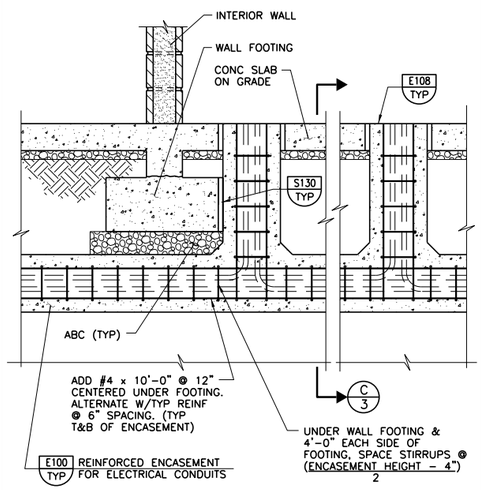

B/- SECTION - INTERIOR WALL FOOTING

E152 TYP (N) — ENCASED ELECTRICAL CONDUITS LOCATED UNDER STRUCTURES — SHEET 2 OF 3 — 08-01-04C

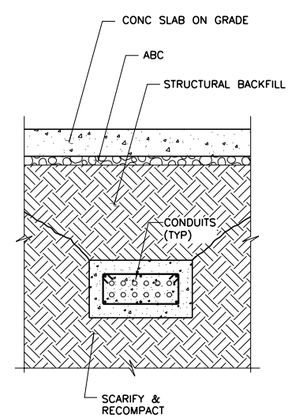

C/1,2 SECTION

E152 TYP (N) — ENCASED ELECTRICAL CONDUITS LOCATED UNDER STRUCTURES — SHEET 3 OF 3 — 08-01-04C

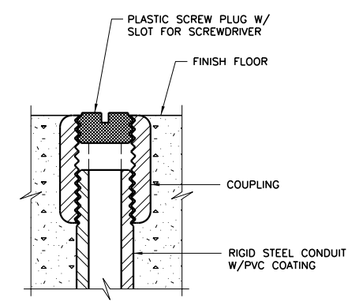

A/- DETAIL - SPARE RACEWAY FLOOR STUB-UP

NOTE:

1. FOR MULTIPLE CONDUITS, PROVIDE 2" MIN CLEAR BETWEEN ADJACENT CONDUITS.

E171 TYP — CONDUIT FLOOR STUB-UP — SHEET 1 OF 2 — 08-01-04C

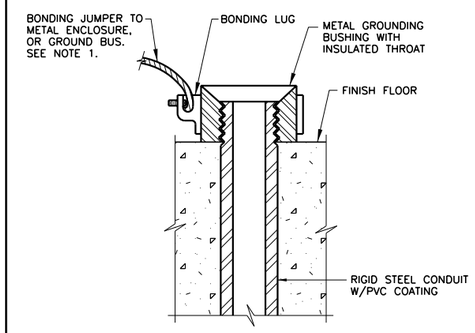

B/- DETAIL - FLOOR STUB-UP INTO ELECTRICAL ENCLOSURES

NOTES:

1. SIZE BONDING JUMPER PER NEC, ARTICLE 250.
2. FOR MULTIPLE CONDUITS, PROVIDE 2" MIN CLEAR BETWEEN ADJACENT CONDUITS.

E171 TYP — CONDUIT FLOOR STUB-UP — SHEET 2 OF 2 — 08-01-04C

REV	DATE	BY	DESCRIPTION
			RECORD DRAWINGS

DESIGNED GRS
DRAWN PMT
CHECKED KAO
DATE MAY 2012

DISCIPLINE ENGINEER: ** ORIGINAL SEALED BY ANTHONY L. MORRONI 11/30/11 E012875 **
PROJECT ENGINEER: ** ORIGINAL SEALED BY DARREN G. BAUNE 11/30/11 No. C68899 **
VICE PRESIDENT: ** ORIGINAL SEALED BY MICHAEL JAMES BRITTEN 11/30/11 No. C27729 **

carollo

CITY OF TURLOCK INC. 1908
STANISLAUS COUNTY, CALIFORNIA

HARDING DRAIN BYPASS
PUMP STATION AND PIPELINE
ELECTRICAL
TYPICAL DETAILS

VERIFY SCALES
BAR IS ONE INCH ON ORIGINAL DRAWING
0 1"
IF NOT ONE INCH ON THIS SHEET, ADJUST SCALES ACCORDINGLY

JOB NO. 6918B.10
DRAWING NO. TE01
SHEET NO. 87 OF 107

Last Saved By: $(GETPROP)??
FILENAME: c:\pw_working\projectwise\crollins\dms60443\G-BDR 6-03-14 02:47pm CRollins XREFS: $(XREFS)??

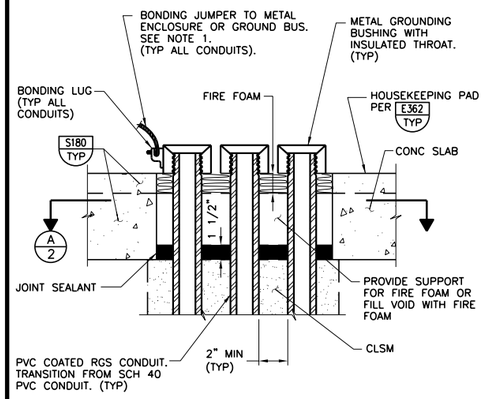

DUCTBANK SLAB PENETRATION

NOTE:

1. SIZE BONDING JUMPER PER NEC, ARTICLE 250.

E173 TYP — MULTIPLE CONDUIT FLOOR STUB-UP
SHEET 1 OF 2

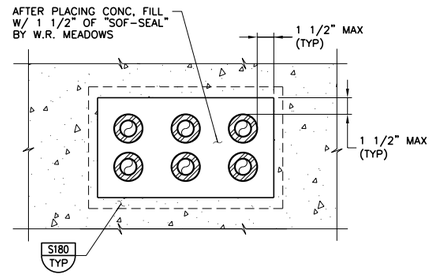

A 1 SECTIONAL PLAN

E173 TYP — MULTIPLE CONDUIT FLOOR STUB-UP
SHEET 2 OF 2

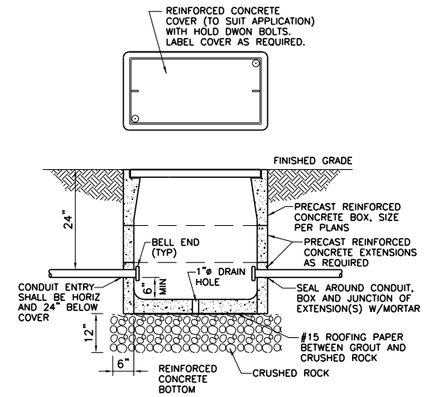

E208 TYP NT — PULL BOX DETAIL

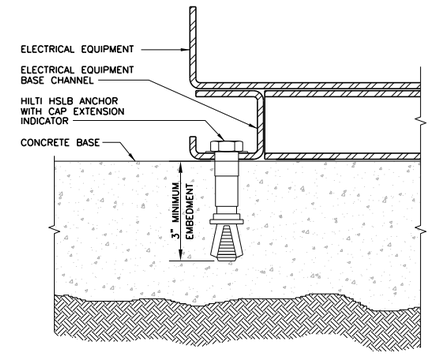

1. EXPANSION ANCHORS SHALL BE A SINGLE-END EXPANSION SHIELD ANCHOR WHICH MEETS THE DESCRIPTIVE PART OF FEDERAL SPECIFICATIONS FF-S-325 GROUP II, TYPE 2, CLASS 2, STYLE 1. ANCHORS SHALL BE DIMENSIONED AS PER HILTI FASTENING SYSTEMS, 5400 SOUTH 122nd EAST AVENUE, TULSA OK 74146.
2. HSLB EXPANSION ANCHORS SHALL BE INSTALLED IN HOLES DRILLED WITH HILTI CARBIDE TIPPED DRILL BITS. ANCHORS SHALL BE INSTALLED AND TORQUED PER MANUFACTURERS RECOMMENDATIONS.
3. INSTALL ANCHORS 15" ON CENTER AROUND ENTIRE PERIMETER OF EQUIPMENT.

E209 TYP NT — DRY TYPE TRANSFORMER MOUNTING DETAIL

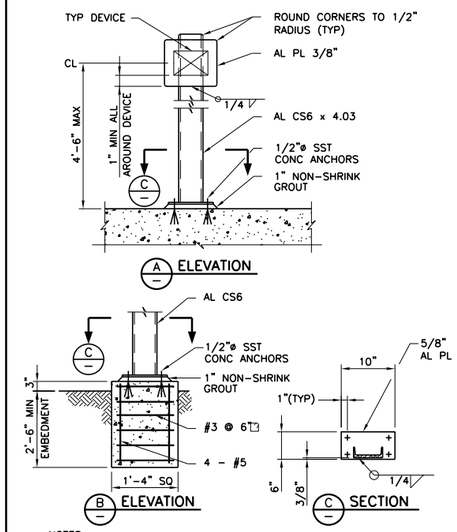

NOTES:

1. WHERE SEPARATE FOUNDATION IS REQD, SEE B.
2. COAT ALUMINUM SURFACES IN CONTACT W/CONCRETE PER SPECS.
3. USE SST FASTENERS FOR MOUNTING DEVICES.
4. WEIGHT OF DEVICE(S) SHALL NOT EXCEED 100 POUNDS.

E330 TYP — DEVICE SUPPORT AND MOUNTING

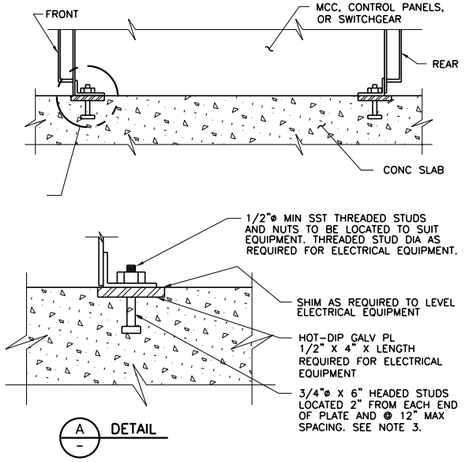

A DETAIL

NOTES:

1. LOCATION OF PLATE AND BOLTS SHALL BE PER APPROVED EQUIPMENT SHOP DRAWING.
2. THE INSTALLED PLATE SHALL NOT DEVIATE FROM A STRAIGHT LINE BY MORE THAN 1/8" IN 10 FEET.
3. THE SPACING OF HEADED STUDS ON THE PLATE SHALL BE REDUCED AS REQUIRED TO PREVENT OVERSTRESS OF THE PLATE AND HEADED STUDS DUE TO SEISMIC LOAD FROM THE ELECTRICAL EQUIPMENT SUPPLIED.

E360 TYP — ELECTRICAL EQUIPMENT ANCHORAGE

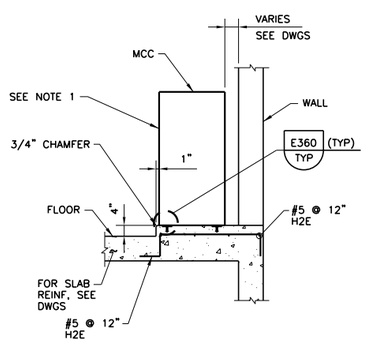

NOTE:

1. INSTALL HANDLE EXTENSIONS ON THE UPPERMOST OPERATORS SUCH THAT UL 845'S "TWO METER RULE" IS SATISFIED.

E362 TYP — ELECTRICAL EQUIPMENT HOUSE KEEPING PAD
SHEET 1 OF 2

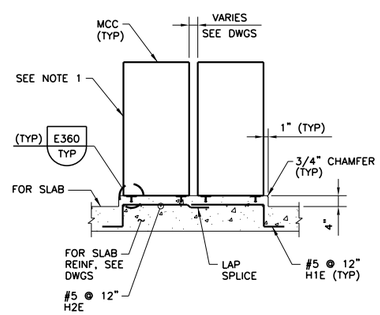

NOTE:

1. INSTALL HANDLE EXTENSIONS ON THE UPPERMOST OPERATORS SUCH THAT UL 845'S "TWO METER RULE" IS SATISFIED.

E362 TYP — ELECTRICAL EQUIPMENT HOUSE KEEPING PAD
SHEET 2 OF 2

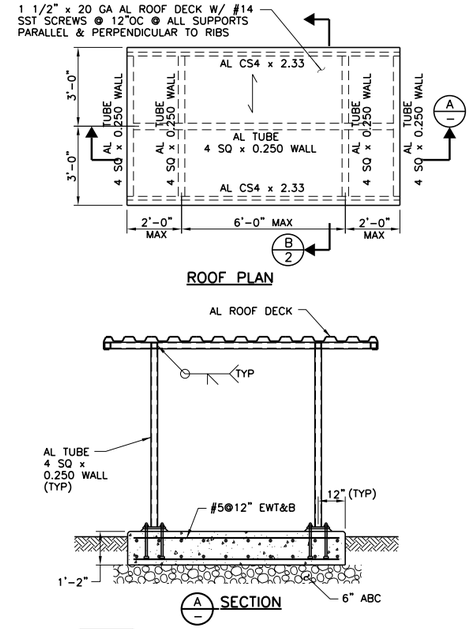

E372 TYP — SUNSHIELD
SHEET 1 OF 2

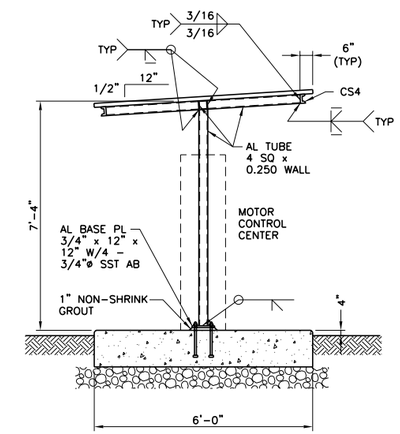

NOTE:

1. MAXIMUM VERTICAL LOAD ON EA COLUMN SHALL NOT EXCEED 1000 LBS.

E372 TYP — MCC SUNSHIELD
SHEET 2 OF 2

REV	DATE	BY	DESCRIPTION
			RECORD DRAWINGS

DESIGNED GRS
DRAWN CJL
CHECKED KOA
DATE MAY 2012

DISCIPLINE ENGINEER: ORIGINAL SEALED BY ANTHONY L. MORRONI 11/30/11 E012875
PROJECT ENGINEER: ORIGINAL SEALED BY DARREN G. BAUNE 11/30/11 No. C68899
VICE PRESIDENT: ORIGINAL SEALED BY MICHAEL JAMES BRITTEN 11/30/11 No. C27729

carollo

CITY OF TURLOCK INC. 1908
STANISLAUS COUNTY, CALIFORNIA

HARDING DRAIN BYPASS
PUMP STATION AND PIPELINE
ELECTRICAL
TYPICAL DETAILS

VERIFY SCALES
BAR IS ONE INCH ON ORIGINAL DRAWING
0 1"
IF NOT ONE INCH ON THIS SHEET, ADJUST SCALES ACCORDINGLY

JOB NO. 6918B.10
DRAWING NO. TE02
SHEET NO. 88 OF 107

Last Saved By: $(GETPROP)??
FILENAME: c:\pw_working\projectwise\crollins\dms60443\G-BDR 6-03-14 02:47pm CRollins XREFS: $(XREFS)??

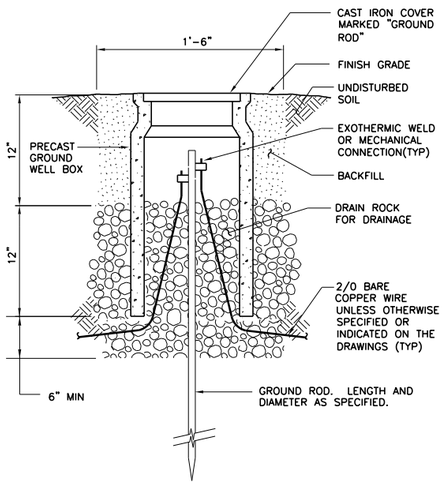

E410 TYP GROUND ROD INSTALLATION

06-01-98

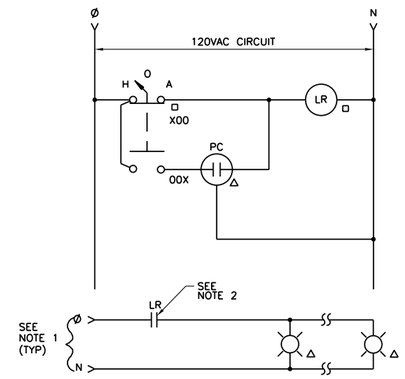

LEGEND

- LR – LIGHTING CONTACTOR RELAY COIL
- PC – PHOTOCELL CONTACTOR
- LIGHTING FIXTURE
- □ – LOCATED IN LIGHTING CONTACTOR CONTROL STATION/ENCLOSURE
- △ – LOCATED IN FIELD

NOTES:

1. SINGLE-PHASE LIGHTING CIRCUITS ARE SHOWN. PROVIDE MULTI-PHASE CIRCUITS AS SPECIFIED AND INDICATED ON THE DRAWINGS.
2. PROVIDE ADDITIONAL CONTACTS AS REQUIRED FOR ADDITIONAL LIGHTING CIRCUITS.

E640 TYP EXTERIOR LIGHTING CONTROL

11-01-96

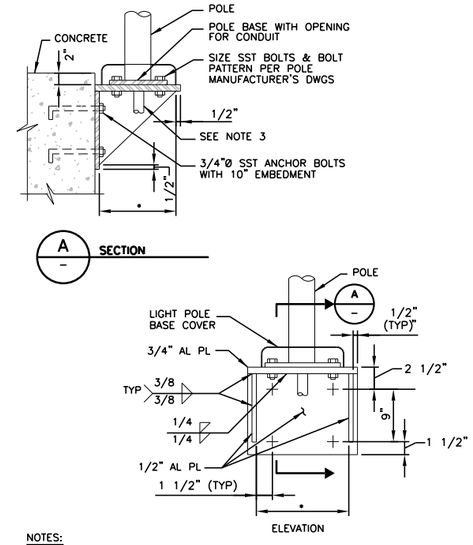

NOTES:

1. COAT AL SURFACES IN CONTACT WITH CONCRETE PER SPECS.
2. • = LARGER OF OD OF LIGHT POLE BASE + 2", OD OF LIGHT POLE BASE COVER + 1", AND 12".
3. CONDUIT. SEE ELECTRICAL DRAWINGS FOR CONDUIT ROUTING. PROVIDE HOLE IN BRACKET TOP PLATE WITH HOLE DIAMETER EQUAL TO CONDUIT OD + 1/2".

EL505 TYP LIGHTING POLE BRACKET ON CONCRETE

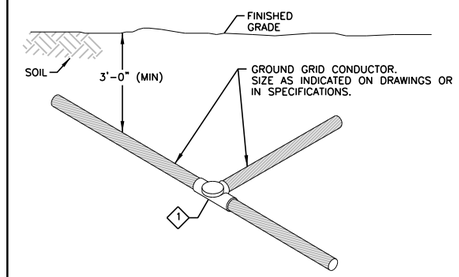

KEY NOTES:

1 HORIZONTAL TEE CONNECTION.

EG151 TYP COPPER GROUNDING CABLE CONNECTION EXOTHERMIC CONNECTION

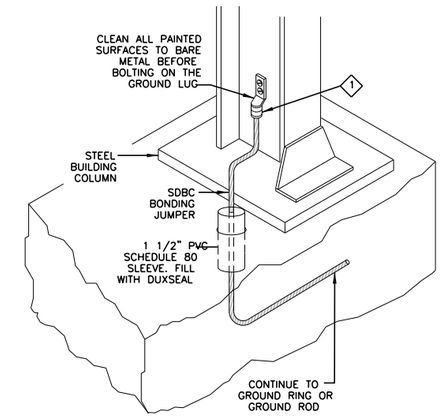

KEY NOTES:

1 HEAVY DUTY COMPRESSION TERMINAL

EG301 TYP BUILDING STRUCTURE GROUNDING COMPRESSION CONNECTION

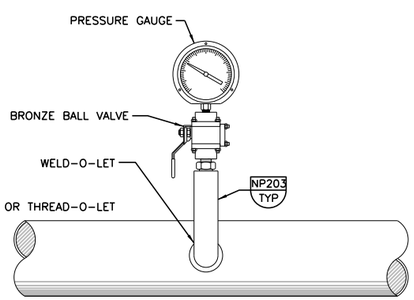

NP103 TYP J PRESSURE GAUGE MOUNTING DETAIL

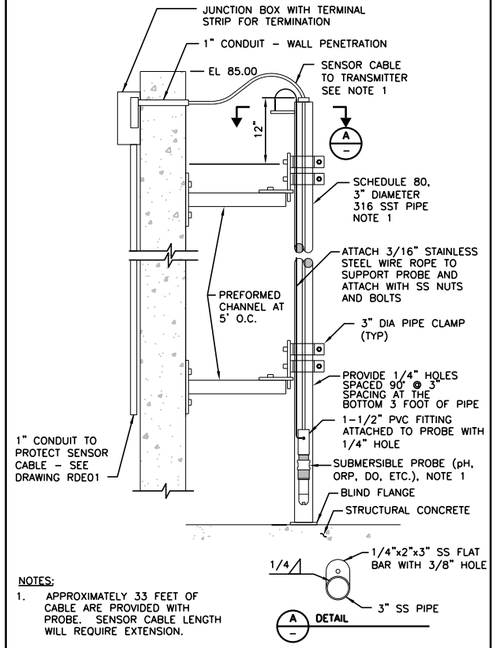

NOTES:

1. APPROXIMATELY 33 FEET OF CABLE ARE PROVIDED WITH PROBE. SENSOR CABLE LENGTH WILL REQUIRE EXTENSION.

NA012 TYP S ANALYZER IN BASIN PROBE MOUNTING DETAIL

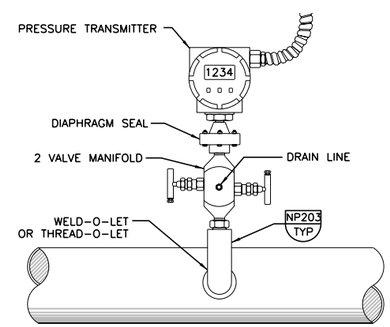

NP184 TYP S PRESSURE TRANSMITTER MOUNTING DETAIL

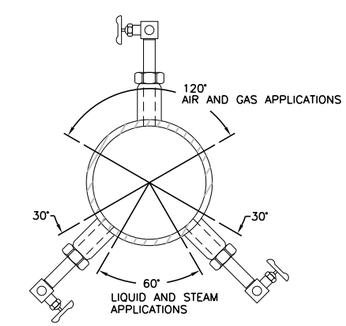

INSTALLATION OF PROBE OR TAP LOCATION DEPENDING ON STATE OF MEASURED MEDIUM

NP203 TYP S PRESSURE OR FLOW INSTRUMENT INSTALLATION

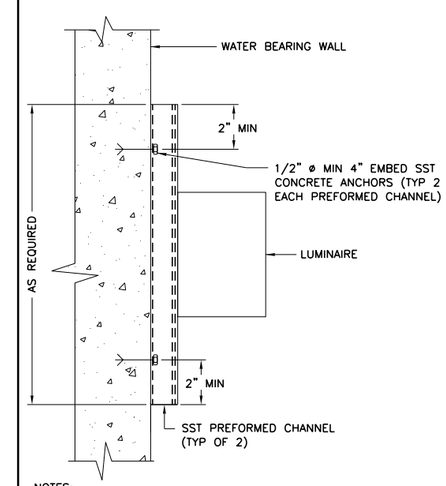

NOTES:

1. THIS DETAIL TYPICAL FOR BOTH VERTICAL AND HORIZONTAL MOUNTING.
2. MATERIAL FOR PREFORMED CHANNEL, FITTINGS, AND CLAMPS SHALL BE AS SPECIFIED IN SECTION 16070.
3. SUPPORTS TO BE SPACED IN ACCORDANCE WITH NEC REQUIREMENTS FOR THE SMALLEST CONDUIT ATTACHED.

EL903 TYP WATER BEARING WALL MOUNTED LUMINAIRE MOUNTING DETAIL

REV	DATE	BY	DESCRIPTION
			RECORD DRAWINGS

DESIGNED GRS
DRAWN CJL
CHECKED KOA
DATE MAY 2012

DISCIPLINE ENGINEER: ORIGINAL SEALED BY ANTHONY L. MORRONI 11/30/11 E012875
PROJECT ENGINEER: ORIGINAL SEALED BY DARREN G. BAUNE 11/30/11 No. C68899
VICE PRESIDENT: ORIGINAL SEALED BY MICHAEL JAMES BRITTEN 11/30/11 No. C27729

carollo

CITY OF TURLOCK INC. 1908
STANISLAUS COUNTY, CALIFORNIA

HARDING DRAIN BYPASS
PUMP STATION AND PIPELINE
ELECTRICAL
TYPICAL DETAILS

VERIFY SCALES
BAR IS ONE INCH ON ORIGINAL DRAWING
0 1"
IF NOT ONE INCH ON THIS SHEET, ADJUST SCALES ACCORDINGLY

JOB NO. 6918B.10
DRAWING NO. TE03
SHEET NO. 89 OF 107

Last Saved By: $(GETPROP)??

FILENAME: c:\pw_working\projectwise\crollins\dms60443\G-BDR 6-09-14 01:37pm CRollins XREFS: $(XREFS)??

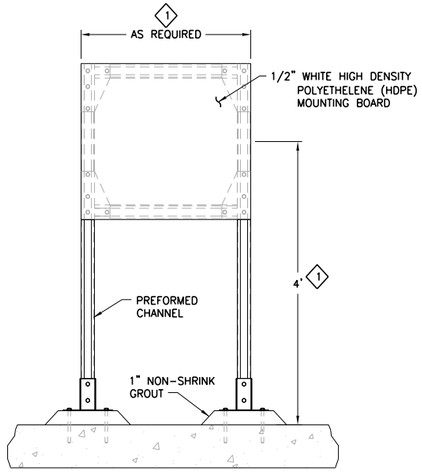

KEY NOTES:

1. PROVIDE CROSS BRACING AND SUPPORT LEGS EVERY 3 FEET.

EM210 TYP S EQUIPMENT MOUNTING STAND

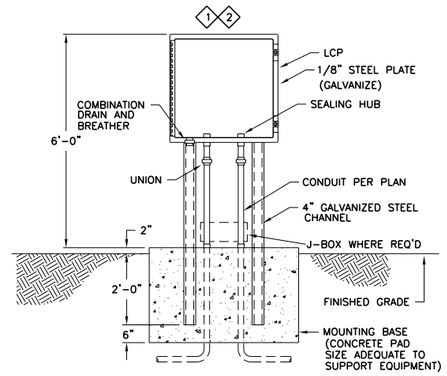

NOTES:

1. PROVIDE CONDUIT SEALS AS INDICATED ON THE DRAWINGS.

KEY NOTES:

1. LOCAL CONTROL PANEL SHALL MEET ENVIRONMENTAL CONDITIONS
2. TAG NUMBER OF LCP PER PLAN DRAWINGS

EM218 TYP S LOCAL CONTROL PANEL INSTALLATION

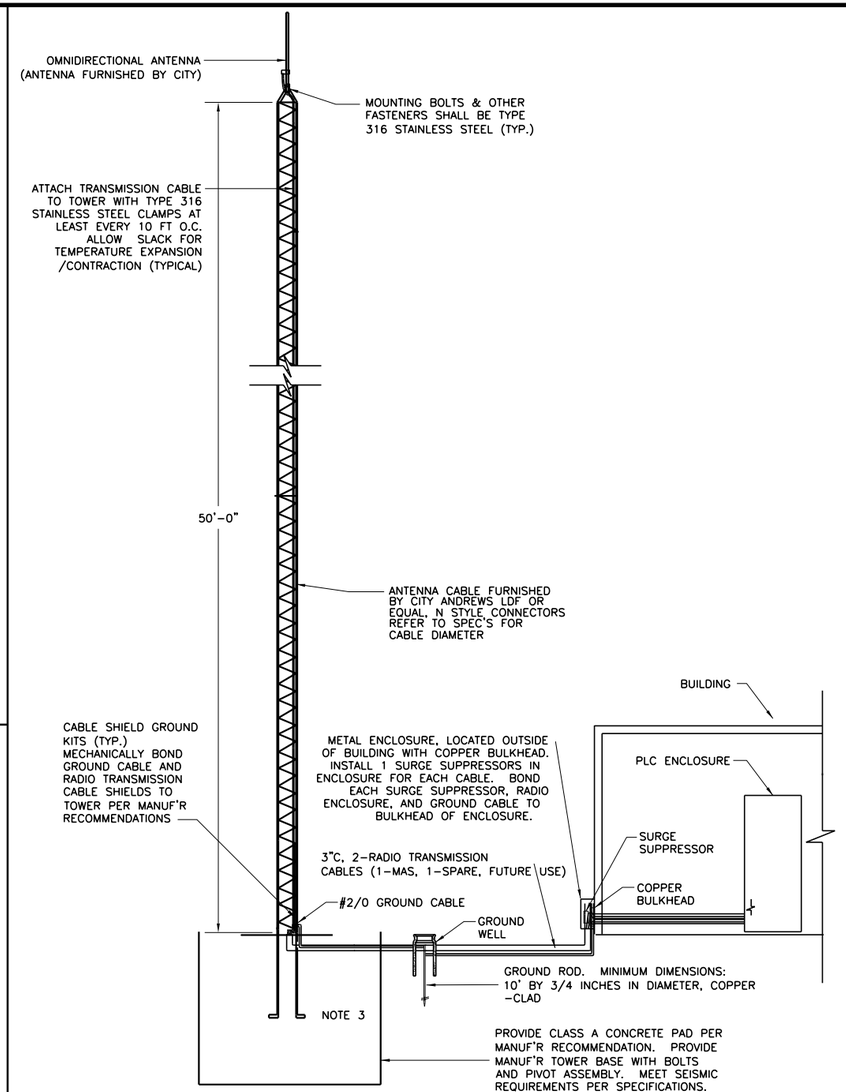

N200.1 TYP ANTENNA TOWER DETAIL

NOTES:

1. ANTENNA (EXCEPT ELEMENT AS REQUIRED) AND MAST SHALL BE MECHANICALLY BONDED TO TOWER.
2. PROVIDE CABLE GROUNDING KIT (ANDREWS, POLYPHASOR, OR EQUAL) TO MECHANICALLY BOND RADIO TRANSMISSION CABLE SHIELD TO TOWER.
3. MECHANICALLY BOND TOWER TO GROUND CABLE.
4. ALL METAL TO METAL CONNECTIONS FOR GROUNDING SHALL BE PREPARED BY SANDING AND SHALL BE BARE METAL. AFTER THE CONNECTION AND INSPECTION REFINISH FOR CORROSION PROTECTION TO MATCH FACTORY FINISH.
5. THE CONTRACTOR IS RESPONSIBLE TO DETERMINE GROUND RODS AND OTHER INSTALLED EQUIPMENT WILL NOT DAMAGE OR HINDER UNDERGROUND UTILITIES. BEFORE DIGGING CONTACT U.S.A. POTHOLE AS NECESSARY.
6. PROVIDE ANTENNA SUPPORT POLE AT OUTFALL PUMP STATION AND STAND PIPE FACILITY.
7. ANTENNA TOWER IS PART OF ADD ALTERNATE 1 AND SHALL BE INSTALLED AT WTF IF SELECTED BY OWNER.

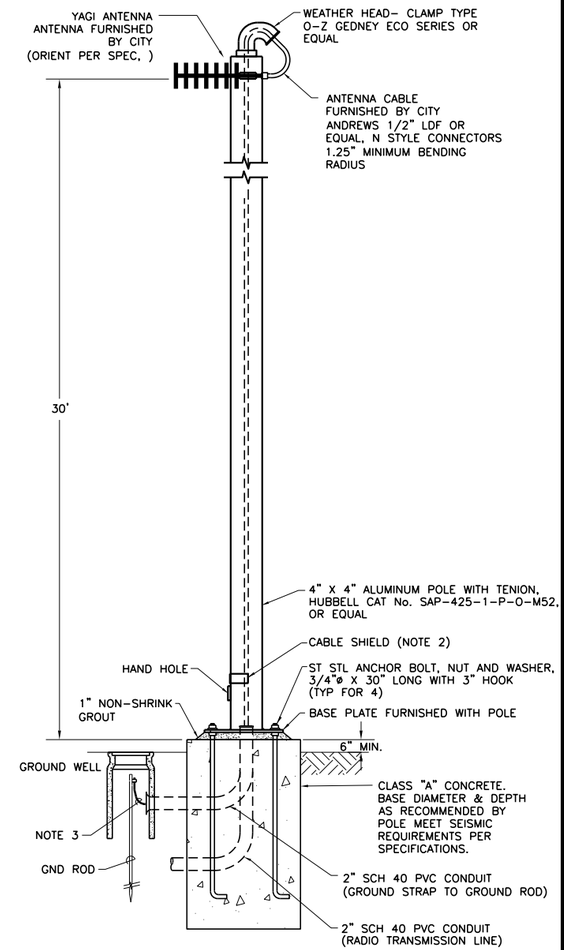

N200.2 TYP ANTENNA SUPPORT POLE DETAIL

03-20-98

NOTES:

1. ANTENNA (EXCEPT ELEMENT AS REQUIRED) AND MAST SHALL BE MECHANICALLY BONDED TO POLE.
2. PROVIDE CABLE GROUNDING KIT (ANDREWS, POLYPHASOR, OR EQUAL) TO MECHANICALLY BOND RADIO TRANSMISSION CABLE SHIELD TO POLE.
3. PROVIDE CABLE GROUNDING KIT (ANDREWS, POLYPHASOR, OR EQUAL) TO CONDUIT FROM POLE TO GROUND ROD. MECHANICALLY BOND STRAP TO POLE AND GROUND ROD.
4. ALL METAL TO METAL CONNECTIONS FOR GROUNDING SHALL BE PREPARED BY SANDING AND SHALL BE BARE METAL. AFTER THE CONNECTION AND INSPECTION REFINISH FOR CORROSION PROTECTION TO MATCH FACTORY FINISH.
5. THE CONTRACTOR IS RESPONSIBLE TO DETERMINE GROUND RODS AND OTHER INSTALLED EQUIPMENT WILL NOT DAMAGE OR HINDER UNDERGROUND UTILITIES. BEFORE DIGGING CONTACT U.S.A. POTHOLE AS NECESSARY.

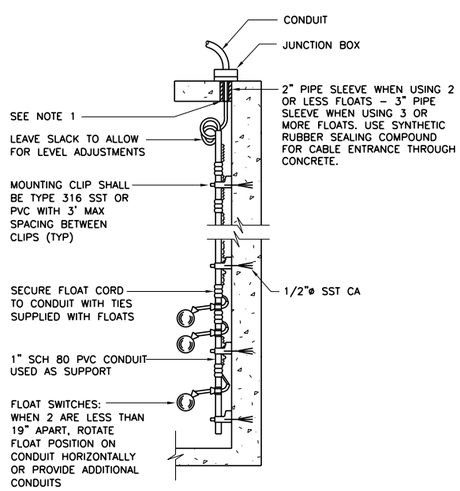

NOTE:

1. ATTACH CABLE TO JUNCTION BOX WITH CORD CONNECTOR GRIP.

N204 TYP FLOAT SWITCH MOUNTING

06-30-99

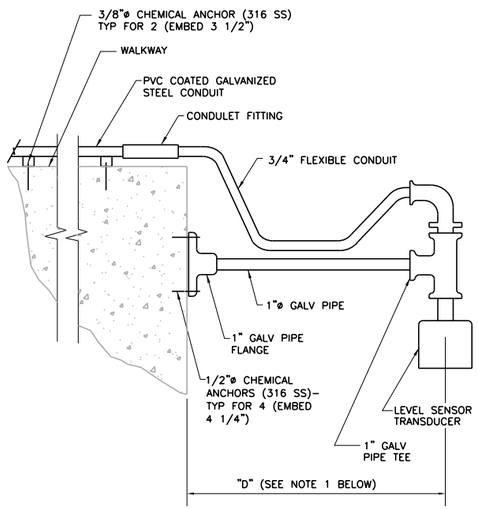

NOTES:

1. MINIMUM DISTANCE FROM TANK WALL "D" SHALL EQUAL 1 1/2" FOR EVERY FOOT OF TANK DEPTH.

N208 TYP ULTRA SONIC LEVEL ELEMENT MOUNTING

N208-N-P 12-17-01

REV	DATE	BY	DESCRIPTION

RECORD DRAWINGS

DESIGNED GRS
DRAWN CJL
CHECKED
DATE MAY 2012

DISCIPLINE ENGINEER: ORIGINAL SEALED BY ANTHONY L. MORRONI 11/30/11 E012875
PROJECT ENGINEER: ORIGINAL SEALED BY DARREN G. BAUNE 11/30/11 No. C68899
VICE PRESIDENT: ORIGINAL SEALED BY MICHAEL JAMES BRITTEN 11/30/11 No. C27729

carollo

CITY OF TURLOCK INC. 1908
STANISLAUS COUNTY, CALIFORNIA

HARDING DRAIN BYPASS
PUMP STATION AND PIPELINE
ELECTRICAL
TYPICAL DETAILS

VERIFY SCALES
BAR IS ONE INCH ON ORIGINAL DRAWING
0 1"
IF NOT ONE INCH ON THIS SHEET, ADJUST SCALES ACCORDINGLY

JOB NO. 6918B.10
DRAWING NO. TE04
SHEET NO. 90 OF 107

Last Saved By: $(GETPROP)??

FILENAME: c:\pw_working\projectwise\crollins\dms60443\G-BDR 6-03-14 02:47pm CRollins XREFS: $(XREFS)??

CONDUIT SCHEDULE-A

TURLOCK WATER QUALITY CONTROL FACILITY

6918B.11 - OUTFALL AND RIVER DISCHARGE FACILITIES

CONDUIT				CONDUCTORS			GROUND			
NUMBER	DWG	TYPE	SIZE	#	SIZE	TYPE	#	SIZE	TYPE	DESCRIPTION
P1000	GE02 GE04	PVC40	5"	1	PULL	ROPE				FR: TID UTILITY SERVICE POLE TO: TID UTILITY SERVICE TRANSFORMER 1 PULL >> UTILITY SERVICE CONDUIT
P1000A	GE02 PSE03 GE04 GE05	GRC PVC40	4"	3 1	-500 -#3/0	XHHW-2 XHHW	1	-#4/0	XHHW-2	FR: TID UTILITY SERVICE TRANSFORMER TO: MDB-1 1 -#3/0 >> PFDR1000A NEUTRAL 3 -500 >> PFDR1000A PHASE
P1000B	GE02 PSE03 GE04 GE05	GRC PVC40	4"	3 1	-500 -#3/0	XHHW-2 XHHW	1	-#4/0	XHHW-2	FR: TID UTILITY SERVICE TRANSFORMER TO: MDB-1 1 -#3/0 >> PFDR1000B NEUTRAL 3 -500 >> PFDR1000B PHASE
P1000C	GE02 PSE03 GE04 GE05	GRC PVC40	4"	3 1	-500 -#3/0	XHHW-2 XHHW	1	-#4/0	XHHW-2	FR: TID UTILITY SERVICE TRANSFORMER TO: MDB-1 1 -#3/0 >> PFDR1000C NEUTRAL 3 -500 >> PFDR1000C PHASE
P1000D	GE02 PSE03 GE04 GE05	GRC PVC40	4"	3 1	-500 -#3/0	XHHW-2 XHHW	1	-#4/0	XHHW-2	FR: TID UTILITY SERVICE TRANSFORMER TO: MDB-1 1 -#3/0 >> PFDR1000D NEUTRAL 3 -500 >> PFDR1000D PHASE
P1000E	GE02 PSE03 GE04 GE05	GRC PVC40	4"	3 1	-500 -#3/0	XHHW-2 XHHW	1	-#4/0	XHHW-2	FR: TID UTILITY SERVICE TRANSFORMER TO: MDB-1 1 -#3/0 >> PFDR1000E NEUTRAL 3 -500 >> PFDR1000E PHASE
P1001	GE02	PVC40	5"	1	PULL	ROPE				FR: TID UTILITY SERVICE POLE TO: TID UTILITY SERVICE TRANSFORMER 1 PULL >> UTILITY SERVICE CONDUIT
C1101	GE05 PSE03	GRC PVC40	1"	8	-#12	XHHW-2	1	-#12	XHHW-2	FR: (4) E-STOPS @ OPS-LCP-029 TO: CABLE TRENCH @VFD'S THEN TO VFD'S 8 -#12 >> HS-2920K,HS-2921K,HS-2922K,HS-2923K
P1101	GE05 PSE03	GRC PVC40	4"	3	-#3/0	XHHW-2	1	#4	XHHW-2	FR: VFD OPS-PUM-100 TO: MDB-1 3 -#3/0 >> PFDR1101
E1101	GE05 PSE03	GRC PVC40	4"	1	PULL	ROPE				FR: VFD OPS-PUM-100 TO: MDB-1 1 PULL >> SPARE CONDUIT ONLY (EFDR1101)
P1101A	GE05 PSE02 PSE03	GRC PVC40	4"	3	-#4/0	XHHW-2	1	-#4	XHHW-2	FR: JB-1 @ OPS-PUM-100 TO: VFD OPS-PUM-100 3 -#4/0 >> PFDR1101A
P1101B	GE05 PSE02	SLT	2.5"	3	-#4/0	XHHW-2	1	-#4	XHHW-2	FR: PUMP OPS-PUM-100 TO: JB-1 @ PUMP OPS-PUM-100 3 -#4/0 >> PFDR1101B
P1101C	PSE02 PSE03	PCS PVC40 SLT	0.75"	2	-#12	XHHW-2	1	-#12	XHHW-2	FR: VSH-2920 TO: PANEL LP-A 2 -#12 >> POPS1101C
E1101A	GE05 PSE02 PSE03	GRC PVC40	4"	1	PULL	ROPE				FR: JB-1 @ PUMP OPS-PUM-100 TO: VFD OPS-PUM-100 1 PULL >> SPARE CONDUIT ONLY (EFDR1101A)

CONDUIT SCHEDULE-A

TURLOCK WATER QUALITY CONTROL FACILITY

6918B.11 - OUTFALL AND RIVER DISCHARGE FACILITIES

CONDUIT				CONDUCTORS			GROUND			
NUMBER	DWG	TYPE	SIZE	#	SIZE	TYPE	#	SIZE	TYPE	DESCRIPTION
C1101E	GE05 PSE02 PSE03	GRC PVC40	1"	2	-#14	XHHW-2	1	-#14	XHHW-2	FR: VFD OPS-PUM-100 TO: OPS-LCP-029 2 -#14 >> HS-2920K-E-STOP
C1102E	GE05 PSE02 PSE03	GRC PVC40	1"	2	-#14	XHHW-2	1	-#14	XHHW-2	FR: VFD OPS-PUM-200 TO: OPS-LCP-029 2 -#14 >> HS-2921K-E-STOP
C1103E	GE05 PSE02 PSE03	GRC PVC40	1"	2	-#14	XHHW-2	1	-#14	XHHW-2	FR: VFD OPS-PUM-300 TO: OPS-LCP-029 2 -#14 >> HS-2922K-E-STOP
C1104E	GE05 PSE02 PSE03	GRC PVC40	1"	2	-#14	XHHW-2	1	-#14	XHHW-2	FR: VFD OPS-PUM-400 TO: OPS-LCP-029 2 -#14 >> HS-2923K-E-STOP
C1101B	GE05 PSE02	SLT	1"	6	-#12	XHHW-2	1	-#12	XHHW-2	FR: OPS-TSHA,B-2920M & OPS-VSH-2920 TO: JB-1 @ PUMP OPS-PUM-100 2 -#12 >> COPSTSHA2920M 2 -#12 >> COPSTSHB2920M 2 -#12 >> COPSVSH2920
C1101D	GE05 PSE02	SLT	1"	2	-#12	XHHW-2	1	-#12	XHHW-2	FR: OPS-MWH-2920 TO: JB-1 @ PUMP OPS-PUM-100 2 -#12 >> COPSMWH2920
S1101A	GE05 PSE02	PCS PVC40 SLT	1"	1	2CS	8719	1	-#14	XHHW-2	FR: VE-2920 TO: MARSHALLING CABINET (TERMINAL BOX) 1 2CS >> SOPS1101A
P1102	GE05 PSE03	GRC PVC40	4"	3	-350	XHHW-2	1	-#4	XHHW-2	FR: VFD OPS-PUM-200 TO: MDB-1 3 -350 >> PFDR1102
E1102	GE05 PSE03	GRC PVC40	4"	1	PULL	ROPE				FR: VFD OPS-PUM-200 TO: MDB-1 1 PULL >> SPARE CONDUIT ONLY (EFDR1102)
P1102A	GE05 PSE02 PSE03	GRC PVC40	4"	3	-#4/0	XHHW-2	1	-#4	XHHW-2	FR: JB-2 @ OPS-PUM-200 TO: VFD OPS-PUM-200 3 -#4/0 >> PFDR1102A
P1102B	GE05 PSE02	SLT	2"	3	-#4/0	XHHW-2	1	-#4	XHHW-2	FR: PUMP OPS-PUM-200 TO: JB-2 @ PUMP OPS-PUM-200 3 -#4/0 >> PFDR1102B
P1102C	PSE02 PSE03	PCS PVC40 SLT	0.75"	2	-#12	XHHW-2	1	-#12	XHHW-2	FR: VSH-2921 TO: PANEL LP-A 2 -#12 >> POPS1102C
E1102A	GE05 PSE02 PSE03	GRC PVC40	4"	1	PULL	ROPE				FR: JB-2 @ PUMP OPS-PUM-200 TO: VFD OPS-PUM-200 1 PULL >> SPARE CONDUIT ONLY (EFDR1102A)
C1102A	GE05 PSE02 PSE03	GRC PVC40	2"	8	-#12	XHHW-2	1	-#12	XHHW-2	FR: JB-2 @ PUMP OPS-PUM-200 TO: VFD OPS-PUM-200 2 -#12 >> COPSTSHA2921M 2 -#12 >> COPSTSHB2921N 2 -#12 >> COPSVSH2921 2 -#12 >> COPSMWH2921
C1102B	GE05 PSE02	SLT	1"	6	-#12	XHHW-2	1	-#12	XHHW-2	FR: OPS-TSHA,B-2921M & OPS-VSH-2921 TO: JB-2 @ PUMP OPS-PUM-200 2 -#12 >> COPSTSHA2921M 2 -#12 >> COPSTSHB2921N 2 -#12 >> COPSVSH2921

CONDUIT SCHEDULE-A

TURLOCK WATER QUALITY CONTROL FACILITY

6918B.11 - OUTFALL AND RIVER DISCHARGE FACILITIES

CONDUIT				CONDUCTORS			GROUND			
NUMBER	DWG	TYPE	SIZE	#	SIZE	TYPE	#	SIZE	TYPE	DESCRIPTION
C1102D	GE05 PSE02	SLT	1"	2	-#12	XHHW-2	1	-#12	XHHW-2	FR: OPS-MWH-2921 TO: JB-2 @ PUMP OPS-PUM-200 2 -#12 >> COPSMWH2921
S1102A	GE05 PSE02	PCS PVC40 SLT	1"	1	2CS	8719	1	-#14	XHHW-2	FR: VE-2921 TO: MARSHALLING CABINET (TERMINAL BOX) 1 2CS >> SOPS1102A
P1103	GE05 PSE03	GRC PVC40	4"	3	-350	XHHW-2	1	-#4	XHHW-2	FR: VFD OPS-PUM-300 TO: MDB-1 3 -350 >> PFDR1103
E1103	GE05 PSE03	GRC PVC40	4"	1	PULL	ROPE				FR: VFD OPS-PUM-300 TO: MDB-1 1 PULL >> SPARE CONDUIT ONLY (EFDR1103)
P1103A	GE05 PSE02 PSE03	GRC PVC40	4"	3	-#4/0	XHHW-2	1	-#4	XHHW-2	FR: JB-3 @ OPS-PUM-300 TO: TO VFD OPS-PUM-300 3 -#4/0 >> PFDR1103A
P1103B	GE05 PSE02	SLT	2.5"	3	-#4/0	XHHW-2	1	-#4	XHHW-2	FR: PUMP OPS-PUM-300 TO: JB-3 @ PUMP OPS-PUM-300 3 -#4/0 >> PFDR1103B
P1103C	PSE02 PSE03	PCS PVC40 SLT	0.75"	2	-#12	XHHW-2	1	-#12	XHHW-2	FR: VSH-2922 TO: PANEL LP-A 2 -#12 >> POPS1103C
E1103A	GE05 PSE02 PSE03	GRC PVC40	4"	1	PULL	ROPE				FR: JB-3 @ PUMP OPS-PUM-300 TO: OPS-PUM-300 1 PULL >> SPARE CONDUIT ONLY (EFDR1103A)
C1103A	GE05 PSE02 PSE03	GRC PVC40	2"	8	-#12	XHHW-2	1	-#12	XHHW-2	FR: JB-3 @ PUMP OPS-PUM-300 TO: VFD OPS-PUM-300 2 -#12 >> COPSTSHA2922M 2 -#12 >> COPSTSHB2922N 2 -#12 >> COPSVSH2922 2 -#12 >> COPSMWH2922
C1103B	GE05 PSE02	SLT	1"	6	-#12	XHHW-2	1	-#12	XHHW-2	FR: OPS-TSHA,B-2922M & OPS-VSH-2922 TO: JB-3 @ PUMP OPS-PUM-300 2 -#12 >> COPSTSHA2922M 2 -#12 >> COPSTSHB2922N 2 -#12 >> COPSVSH2922
C1103D	GE05 PSE02	SLT	1"	2	-#12	XHHW-2	1	-#12	XHHW-2	FR: OPS-MWH-2922 TO: JB-3 @ PUMP OPS-PUM-300 2 -#12 >> COPSMWH2922
S1103A	GE05 PSE02	PCS PVC40 SLT	1"	1	2CS	8719	1	-#14	XHHW-2	FR: VE-2922 TO: MARSHALLING CABINET (TERMINAL BOX) 1 2CS >> SOPS1103A
P1104	GE05 PSE03	GRC PVC40	4"	3	-350	XHHW-2	1	-#4	XHHW-2	FR: VFD OPS-PUM-400 TO: MDB-1 3 -350 >> PFDR1104
E1104	GE05 PSE03	GRC PVC40	4"	1	PULL	ROPE				FR: VFD OPS-PUM-400 TO: MDB-1 1 PULL >> SPARE CONDUIT ONLY (EFDR1104)
P1104A	GE05 PSE02 PSE03	GRC PVC40	4"	3	-#4/0	XHHW-2	1	-#4	XHHW-2	FR: JB-4 @ OPS-PUM-400 TO: VFD OPS-PUM-400 3 -#4/0 >> PFDR1104A

CONDUIT SCHEDULE-A

TURLOCK WATER QUALITY CONTROL FACILITY

6918B.11 - OUTFALL AND RIVER DISCHARGE FACILITIES

CONDUIT				CONDUCTORS			GROUND			
NUMBER	DWG	TYPE	SIZE	#	SIZE	TYPE	#	SIZE	TYPE	DESCRIPTION
P1104B	GE05 PSE02	SLT	1.5"	3	-#2	XHHW-2	1	-#4	XHHW-2	FR: PUMP OPS-PUM-400 TO: JB-4 @ PUMP OPS-PUM-400 3 -#2 >> PFDR1104B
P1104C	PSE02 PSE03	PCS PVC40 SLT	1"	2	-#12	XHHW-2	1	-#12	XHHW-2	FR: VSH-2923 TO: PANEL LP-A 2 -#12 >> POPS1104C
E1104A	GE05 PSE02 PSE03	GRC PVC40	4"	1	PULL	ROPE				FR: JB-4 @ PUMP OPS-PUM-400 TO: VFD OPS-PUM-400 1 PULL >> SPARE CONDUIT ONLY
C1104A	GE05 PSE02 PSE03 PSE03	GRC PVC40	2"	8	-#12	XHHW-2	1	-#12	XHHW-2	FR: JB-4 @ PUMP OPS-PUM-400 TO: VFD OPS-PUM-400 2 -#12 >> COPSTSHA2923M 2 -#12 >> COPSTSHB2923N 2 -#12 >> COPSVSH2923 2 -#12 >> COPSMWH2923
C1104B	GE05 PSE02	SLT	1"	6	-#12	XHHW-2	1	-#12	XHHW-2	FR: OPS-TSHA,B-2923M & OPS-VSH-2923 TO: JB-4 @ PUMP OPS-PUM-400 2 -#12 >> COPSTSHA2923M 2 -#12 >> COPSTSHB2923N 2 -#12 >> COPSVSH2923
C1104D	GE05 PSE02	SLT	1"	2	-#12	XHHW-2	1	-#12	XHHW-2	FR: VE-2923 TO: JB-4 @ PUMP OPS-PUM-400 2 -#12 >> COPSMWH2923
S1104A	GE05 PSE02	PCS PVC40 SLT	1"	1	2CS	8719	1	-#14	XHHW-2	FR: VIBRATION SWITCH TO: MARSHALLING CABINET (TERMINAL BOX) 1 2CS >> SOPS1104A
C1105	PSE02 PSE03	PVC40 PCS	1"	8	-#14	XHHW-2	1	-#14	XHHW-2	FR: J-BOX @ OPS-LS'S TO: MARSHALLING CABINET (TERMINAL BOX) 8 -#14 >> LSLL-2910,LSL-2910,LSH-2910,LSHH-2910
C1105A	PSE02	PVC40	1"	4	MFR	CABLE				FR: OPS-LSH-2910 TO: PLC/SCADA SYSTEM VIA J-BOX 4 MFR >> LSLL-2910, LSL-2910,LSH-2910,LSHH-2910
S1101B	PSE03	GRC PVC40	2"	2-2CS	#16	XHHW-2	1	-#14	XHHW-2	FR: MARSHALLING PANEL TO: VFD OPS-PMP-100 2 -#16 >> PULL ROPE ONLY
S1102B	PSE03	GRC PVC40	2"	2-2CS	#16	XHHW-2	1	-#14	XHHW-2	FR: MARSHALLING PANEL TO: VFD OPS-PMP-200 2 -#16 >> PULL ROPE ONLY
S1101C	PSE03	GRC PVC40	2"	2-2CS	#16	XHHW-2	1	-#14	XHHW-2	FR: MARSHALLING PANEL TO: VFD OPS-PMP-300 2 -#16 >>
S1101D	PSE03	GRC PVC40	2"	2-2CS	#16	XHHW-2	1	-#14	XHHW-2	FR: MARSHALLING PANEL TO: VFD OPS-PMP-400 2 -#16 >>
P1107	PSE02 PSE03	PVC40 PCS	0.75"	4	-#12	XHHW-2	1	-#12	XHHW-2	FR: OPS-LIT-2910B TO: PANEL LP-A 2 -#12 >> POPSLIT2910A 2 -#12 >> POPSLIT2910B
P1107B	PSE02	PCS	0.75"	2	-#12	XHHW-2	1	-#12	XHHW-2	FR: J-BOX @ OPS-LIT-2910B TO: J-BOX @ OPS-LIT-2910A 2 -#12 >> POPSLIT2910A

Last Saved By: $(GETPROP)??

REV	DATE	BY	DESCRIPTION
			RECORD DRAWINGS

DESIGNED GRS
DRAWN PMT
CHECKED KAO
DATE MAY 2012

DISCIPLINE ENGINEER: ORIGINAL SEALED BY ANTHONY L. MORRONI 11/30/11 E012875

PROJECT ENGINEER: ORIGINAL SEALED BY DARREN G. BAUNE 11/30/11 No. C68899

VICE PRESIDENT: ORIGINAL SEALED BY MICHAEL JAMES BRITTEN 11/30/11 No. C27729

carollo

CITY OF TURLOCK INC. 1908

STANISLAUS COUNTY, CALIFORNIA

HARDING DRAIN BYPASS

PUMP STATION AND PIPELINE

ELECTRICAL

CONDUIT AND CABLE SCHEDULE

VERIFY SCALES
BAR IS ONE INCH ON ORIGINAL DRAWING
0 1"
IF NOT ONE INCH ON THIS SHEET, ADJUST SCALES ACCORDINGLY

JOB NO. 6918B.10

DRAWING NO. CSE02

SHEET NO. 92 OF 107

FILENAME: c:\pw_working\projectwise\crollins\dms60443\G-BDR 6-03-14 02:47pm CRollins XREFS: $(XREFS)??

CONDUIT SCHEDULE-A

TURLOCK WATER QUALITY CONTROL FACILITY

6918B.11 - OUTFALL AND RIVER DISCHARGE FACILITIES

CONDUIT				CONDUCTORS			GROUND			
NUMBER	DWG	TYPE	SIZE	#	SIZE	TYPE	#	SIZE	TYPE	DESCRIPTION
S1107	PSE02	PVC40 GRC	0.75"	2	STP	#16	1	-#14	XHHW-2	FR: OPS-LIT-2910B TO: MARSHALLING CABINET (TERMINAL BOX) 1 STP >> SOPSLIT2910B 1 STP >> SOPSLIT2910A
S1107A	PSE02	PCS	0.75"	1	STP	#16	1	-#14	XHHW-2	FR: OPS-LE-2910B TO: OPS-LIT-2901B VIA J-BOX 1 STP >> SOPSLE2910B
S1107B	PSE02	PVC40 GRC	0.75"	1	STP	#16	1	-#14	XHHW-2	FR: J-BOX @ OPS-LIT-2910B TO: J-BOX @ OPS-LIT-2910A 1 STP >> SOPSLIT2910A
S1108A	PSE02	PCS	0.75"	1	STP	#16	1	-#14	XHHW-2	FR: OPS-LE-2910A TO: OPS-LIT-2901A VIA J-BOX 1 STP >> SOPSLE2910A
PC1110	PSE01 PSE03	GRC	0.75"	2	-#12	XHHW-2	1	-#12	XHHW-2	FR: OPS-EF-200 TO: PANEL LP-A 2 -#12 >> POPSEF200
C1110A	PSE01	GRC	0.75"	4	-#12	XHHW-2	1	-#12	XHHW-2	FR: OPS-EF-200 TO: LCP-EF-200 4 -#12 >> CLCPEF200
C1110B	PSE01	GRC	0.75"	1	MFR	CABLE	1	-#14	XHHW-2	FR: LCP-EF-200 TO: THERMOSTAT CONTROL 1 MFR >> COPSEF200
PC1111	PSE01 PSE03	GRC	0.75"	2	-#12	XHHW-2	1	-#12	XHHW-2	FR: OPS-EF-100 TO: PANEL LP-A 2 -#12 >> POPSEF100
C1111A	PSE01	GRC	0.75"	4	-#12	XHHW-2	1	-#12	XHHW-2	FR: OPS-EF-100 TO: LCP-EF-100 4 -#12 >> CLCPEF100
C1111B	PSE01	GRC	0.75"	1	MFR	CABLE	1	-#14	XHHW-2	FR: LCP-EF-100 TO: THERMOSTAT CONTROL 1 MFR >> COPSEF100
S1111	PSE01 PSE03	GRC	0.75"	2	2CS	8719	1	-#14	XHHW-2	FR: SMOKE DETECTOR ASH-2977A TO: MARSHALLING CABINET (TERMINAL BOX) 1 2CS >> SOPSEF100 1 2CS >> SOPSEF200
P1112	PSE02 PSE03	PCS PVC40 SLT	1"	2	-#12	XHHW-2	1	-#12	XHHW-2	FR: OPS-FIT-2931 TO: PANEL 'LP-A' 2 -#12 >> POPSFIT2931
S1112	PSE02 PSE03	PCS PVC40 SLT	1"	2	STP	#16	1	-#14	XHHW-2	FR: JUNCTION BOX TO: MARSHALLING CABINET (TERMINAL BOX) 1 STP >> SOPSFIT2931
P1130	PSE03	PCS PVC40	0.75"	3	-#10	XHHW-2	1	-#10	XHHW-2	FR: DISCONNECT @ OPS-AC-100 TO: PANEL 'DP-1' 3 -#10 >> POPSAC100A
C1130	PSE03	GRC	0.75"	1	MFR	CABLE				FR: THERMOSTAT CONTROL TO: JUNCTION BOX 1 MFR >> COPSAC100
C1130A	PSE03	GRC	0.75"	10	-#14	XHHW-2	1	-#14	XHHW-2	FR: JUNCTION BOX TO: OPS-FC-100 10 -#14 >> OPS-FC-100 CONTROL
C1130B	PSE03	GRC	0.75"	12	-#14	XHHW-2	1	-#14	XHHW-2	FR: JUNCTION BOX TO: OPS-AC-100 12 -#14 >> OPS-AC-100 CONTROL
C1130C	PSE03	GRC	0.75"	12	-#14	XHHW-2	1	-#14	XHHW-2	FR: JUNCTION BOX TO: MARSHALL PANEL 8 -#14 >> OPS-FC-100 CONTROL
P1140	PSE01	GRC	0.75"	4	-#10	XHHW-2	1	-#10	XHHW-2	FR: LIGHTS IN PUMP ROOM TO: LP-A 4 -#10 >> LIGHTING CIRCUITS

CONDUIT SCHEDULE-A

TURLOCK WATER QUALITY CONTROL FACILITY

6918B.11 - OUTFALL AND RIVER DISCHARGE FACILITIES

CONDUIT				CONDUCTORS			GROUND			
NUMBER	DWG	TYPE	SIZE	#	SIZE	TYPE	#	SIZE	TYPE	DESCRIPTION
P1141	PSE01	GRC	0.75"	2	-#12	XHHW-2	1	-#12	XHHW-2	FR: EXIT SIGNS IN PUMP ROOM TO: LP-A 2 -#12 >> LIGHTING CIRCUIT
P1142	PSE02	GRC PVC40 PCS	0.75"	4	-#12	XHHW-2	1	-#12	XHHW-2	FR: RECEPTACLES IN PUMP ROOM TO: LP-A 4 -#12 >> RECEPTACLE CIRCUITS, LP-A- 12, 14
P1143	PSE03	GRC PVC40 PCS	0.75"	2	-#12	XHHW-2	1	-#12	XHHW-2	FR: RECEPTACLES IN ELECTRICAL ROOM TO: LP-A 2 -#12 >> LP-A-16
P1144	PSE03	GRC	0.75"	2	-#12	XHHW-2	1	-#12	XHHW-2	FR: RECEPTACLES IN ELECTRICAL ROOM TO: LP-A 2 -#12 >> LP-A-2
P1145	PSE03	GRC	0.75"	2	-#12	XHHW-2	1	-#12	XHHW-2	FR: RTU ENCLOSURE IN ELECTRICAL ROOM TO: LP-A 2 -#12 >> LP-A-4
P1146	PSE03	GRC	0.75"	2	-#12	XHHW-2	1	-#12	XHHW-2	FR: PLC/RADIO ENCLOSURE IN ELECTRICAL ROOM TO: LP-A 2 -#12 >> LP-A-6
P1147	PSE04	GRC	0.75"	2	-#14	XHHW-2	1	-#14	XHHW-2	FR: LIGHTS IN ELECTRICAL ROOM TO: LP-A 2 -#14 >> LP-A-1
P1150	PSE02 PSE03	GRC PCS PVC40	0.75"	2	-#12	XHHW-2	1	-#12	XHHW-2	FR: OPS-PUM-500 TO: LP-A 2 -#12 >> OPS-PUM-500
P1200	PSE03 GE05	GRC	1.5"	3	-#2	XHHW-2	1	-#8	XHHW-2	FR: SWITCHBOARD MDB-1 TO: TR-A 3 -#2 >> FP1200
P1201	PSE03 GE05	GRC SLT	2"	4	-#2	XHHW-2	1	-#8	XHHW-2	FR: TRANSFORMER TR-A TO: LP-A 4 -#2 >> FP1201
P1202A	PSE03 GE05	GRC PVC40 SLT	2"	3	-#2	XHHW-2	1	-#8	XHHW-2	FR: SWITCHBOARD MDB-1 TO: DP-1 3 -#2 >> PFDR1202A
C1102D	PSE03	GRC PVC40	2"	22	-#14	XHHW-2	1	-#14	XHHW-2	FR: MARSHALLING PANEL TO: VFD OPS-PUM-400 1 PULL >> PULL ROPE ONLY
E1203B	PSE03	GRC PVC40	2"	1	PULL	ROPE				FR: LP-A TO: NW CORNER OF ELECTRICAL BUILDING 1 PULL >> PULL ROPE ONLY
P1204	PSE04	GRC	0.75"	2	-#10	XHHW-2	1	-#10	XHHW-2	FR: EXTERIOR LIGHT FIXTURES TO: LIGHTING TIMER AND CONTACTOR 2 -#10 >> LP-A-5
C1204	PSE04	GRC	0.75"	3	-#12	XHHW-2	1	-#12	XHHW-2	FR: ROOF MOUNTED PHOTOCELL TO: LIGHTING CONTACTOR 3 -#12 >> PHOTOCELL CIRCUIT
P1204A	PSE04	GRC	0.75"	2	-#10	XHHW-2	1	-#10	XHHW-2	FR: LIGHTING TIMER AND CONTACTOR TO: LP-A 2 -#10 >> LP-A-5
E1300	PSE03	GRC PVC40	2"	1	PULL	ROPE				FR: SWITCHBOARD MDB-1 TO: PLC 1 PULL >> PULL ROPE ONLY

CONDUIT SCHEDULE-A

TURLOCK WATER QUALITY CONTROL FACILITY

6918B.11 - OUTFALL AND RIVER DISCHARGE FACILITIES

CONDUIT				CONDUCTORS			GROUND			
NUMBER	DWG	TYPE	SIZE	#	SIZE	TYPE	#	SIZE	TYPE	DESCRIPTION
CABLE TRAY	PSE03	GRC PVC40	2"	1	PULL	ROPE				FR: PLC TO: RTU 1 PULL >> PULL ROPE ONLY
CABLE TRAY	PSE03	GRC PVC40	2"	1	PULL	ROPE				FR: PLC TO: RTU 1 PULL >> PULL ROPE ONLY
CABLE TRAY	PSE03	GRC	2"	1	PULL	ROPE				FR: RTU RADIO TO: PLC 1 PULL >> PULL ROPE ONLY
CABLE TRAY	PSE03	GRC	2"	1	PULL	ROPE				FR: RTU RADIO TO: PLC 1 PULL >> PULL ROPE ONLY
S1300E	PSE03	GRC	2.5"	20	2CS	8719	1	-#14	XHHW-2	FR: MARSHALLING CABINET (TERMINAL BOX) TO: PLC 20 2CS >> SIGNAL
S1301A	PSE02 PSE03	GRC	0.75"	1	8/C#22	5506FE	1	-#14	XHHW-2	FR: CARD READER TO: J-BOX 1 8/C#22 >> ELECTRICAL ROOM DOOR CARD READER
S1301B	PSE02	GRC	0.75"	1	8/C#22	5506FE	1	-#14	XHHW-2	FR: CARD READER TO: J-BOX 1 8/C#22 >> PUMP ROOM DOOR CARD READER
S1301C	PSE02	GRC	0.75"	2	8/C#22	5506FE	1	-#14	XHHW-2	FR: J-BOX TO: DOOR SECURITY PANEL 2 8/C#22 >> CARD READERS
CABLE TRAY	PSE03	GRC	0.75"	2	-#14	XHHW-2	1	-#14	XHHW-2	FR: MARSHALLING CABINET (TERMINAL BOX) TO: RTU 2 -#14 >> INTRUSION ALARM
C1301	PSE03	GRC	1"	14	-#14	XHHW-2	1	-#14	XHHW-2	FR: J-BOX TO: MARSHALLING CABINET (TERMINAL BOX) 2 -#14 >> ALARM CIRCUIT - XS-2910C 2 -#14 >> ALARM CIRCUIT - XS-2910F 2 -#14 >> ALARM CIRCUIT - XS-2910B 2 -#14 >> ALARM CIRCUIT - XS-2910A 2 -#14 >> ALARM CIRCUIT - XS-2910D 2 -#14 >> ALARM CIRCUIT - XS-2910E 2 -#14 >> DOOR SECURITY PANEL
C1301A	PSE03	GRC	0.75"	2	-#14	XHHW-2	1	-#14	XHHW-2	FR: DOOR ALARM CONTACT XS-2910F TO: J-BOX 2 -#14 >> ALARM CIRCUIT - XS-2910F
C1301B	PSE03 PSE02	GRC	0.75"	4	-#14	XHHW-2	1	-#14	XHHW-2	FR: DOOR ALARM CONTACT XS-2910C TO: J-BOX 2 -#14 >> ALARM CIRCUIT - XS-2910C 2 -#14 >> DOOR SECURITY PANEL
C1301C	PSE03	GRC	0.75"	6	-#14	XHHW-2	1	-#14	XHHW-2	FR: DOOR ALARM CONTACT J-BOX TO: DOOR ALARM CONTACT J-BOX 2 -#14 >> ALARM CIRCUIT - XS-2910F 2 -#14 >> ALARM CIRCUIT - XS-2910C 2 -#14 >> DOOR SECURITY PANEL
C1301D	PSE03	GRC	0.75"	1	-#14	XHHW-2	1	-#14	XHHW-2	FR: DOOR ALARM CONTACT XS-2910D TO: J-BOX 2 -#14 >> ALARM CIRCUIT - XS-2910D
C1301E	PSE03	GRC	0.75"	1	-#14	XHHW-2	1	-#14	XHHW-2	FR: DOOR ALARM CONTACT XS-2910E TO: J-BOX 2 -#14 >> ALARM CIRCUIT - XS-2910E
C1301F	PSE03 PSE02	GRC	0.75"	2	-#14	XHHW-2	1	-#14	XHHW-2	FR: DOOR ALARM CONTACT XS-2910B TO: J-BOX 2 -#14 >> ALARM CIRCUIT - XS-2910B
C1301G	PSE03 PSE02	GRC	0.75"	2	-#14	XHHW-2	1	-#14	XHHW-2	FR: DOOR ALARM CONTACT XS-2910A TO: J-BOX 2 -#14 >> ALARM CIRCUIT - XS-2910A
C1301H	PSE03 PSE02	GRC	0.75"	4	-#14	XHHW-2	1	-#14	XHHW-2	FR: DOOR ALARM CONTACT J-BOX TO: DOOR ALARM CONTACT J-BOX 2 -#14 >> ALARM CIRCUIT - XS-2910B 2 -#14 >> ALARM CIRCUIT - XS-2910A

CONDUIT SCHEDULE-A

TURLOCK WATER QUALITY CONTROL FACILITY

6918B.11 - OUTFALL AND RIVER DISCHARGE FACILITIES

CONDUIT				CONDUCTORS			GROUND			
NUMBER	DWG	TYPE	SIZE	#	SIZE	TYPE	#	SIZE	TYPE	DESCRIPTION
C1301J	PSE02	GRC	0.75"	2	-#14	XHHW-2	1	-#14	XHHW-2	FR: DOOR SECURITY PANEL TO: DOOR ALARM CONTACT XS-2910C 2 -#14 >> DOOR SECURITY PANEL
P1301	PSE02 PSE03	GRC	0.75"	2	-#12	XHHW-2	1	-#12	XHHW-2	FR: DOOR ALARM SECURITY PANEL TO: PANEL 'LP-A' 2 -#12 >> POPS1301DA
P1302A	PSE03 PSE02	GRC	0.75"	2	-#12	XHHW-2	1	-#12	XHHW-2	FR: DOOR LOCK TO: J-BOX 2 -#12 >> POPS1301DA
P1302B	PSE02	GRC	0.75"	2	-#12	XHHW-2	1	-#12	XHHW-2	FR: DOOR LOCK TO: J-BOX 2 -#12 >> PUMP ROOM DOOR LOCK
P1302C	PSE02	GRC	0.75"	4	-#12	XHHW-2	1	-#12	XHHW-2	FR: J-BOX TO: DOOR SECURITY PANEL 2 -#12 >> ELECTRICAL ROOM DOOR LOCK 2 -#12 >> PUMP ROOM DOOR LOCK
P1502	GE03 RDE01	PVC40 PCS	1"	2	-#12	XHHW-2	1	-#12	XHHW-2	FR: RECEPTACLES AT STANDPIPE STRUCTURE TO: LIGHTING PANEL 2 -#12 >> PLTS1501
P1505	GE03 RDE01	PVC40 PCS	1"	2	-#12	XHHW-2	1	-#12	XHHW-2	FR: AIT-3930 TO: LIGHTING PANEL 2 -#12 >> P-AIT-3930
S1505	GE03 RDE01	PVC40 PCS	0.75"	1	2CS	8719	1	-#14	XHHW-2	FR: AIT-3930 TO: RTU 1 2CS >> S-AIT-3930
S1506	GE03 RDE01	PVC40 PCS	1"	1	2CS	8719	1	-#14	XHHW-2	FR: LIT-3910 TO: RTU 1 2CS >> SRDLIT3910
P2000	GE03	PVC40	4"	1	PULL	ROPE				FR: TID UTILITY SERVICE POLE TO: 480-VOLT SERVICE ENTRANCE 1 PULL >> CONDUCTOR PER UTILITY SERVICE REQUIREMENTS
C1101C	PSE03	PVC40 GRC	2"	22	-#14	XHHW-2	1	-#14	XHHW-2	FR: VFD OPS-PUM-100 TO: MARSHALLING CABINET (TERMINAL BOX) 50 -#14 >> DISCRETE SIGNALS FROM VFDS & INSTRUMENTS
C1102C	PSE03	PVC40 GRC	2"	22	-#14	XHHW-2	1	-#14	XHHW-2	FR: VFD OPS-PUM-200 TO: MARSHALLING CABINET (TERMINAL BOX) 50 -#14 >> DISCRETE SIGNALS FROM VFDS & INSTRUMENTS
C1103C	PSE03	PVC40 GRC	2"	22	-#14	XHHW-2	1	-#14	XHHW-2	FR: VFD OPS-PUM-300 TO: MARSHALLING CABINET (TERMINAL BOX) 14 2CS >> ANALOG SIGNALS FROM VFDS & INSTRUMENTS
S4000	PSE03	PVC40 PCS	3"	2	COAX					FR: TELEMETRY RADIO POLE TO: POLYPHASOR 2 COAX >> STEL4000
S4001	PSE03	PVC40 PCS	3"	2	COAX					FR: POLYPHASOR TO: RTU AND COMMUNICATIONS TERMINAL CABINET 2 COAX >> STEL4001
P4002	GE03	PVC40 PCS	0.75"	4	-#12	XHHW-2	1	-#12	XHHW-2	FR: RTU TO: PANEL 'MPZ1' 2 -#12 >> PMPZ14002 2 -#12 >> XS-39990A
S4002	GE03	PVC40 PCS	3"	2	COAX					FR: TELEMETRY RADIO POLE TO: RTU AND COMMUNICATIONS TERMINAL CABINET 2 COAX >> STEL4002
P1504	GE03	PVC40 GRC	1"	3	#2	XHHW-2	1	#6	XHHW-2	FR: UTILITY METER TO: LP-1

REV	DATE	BY	DESCRIPTION

RECORD DRAWINGS

DESIGNED GRS
DRAWN PMT
CHECKED KAO
DATE MAY 2012

DISCIPLINE ENGINEER: ORIGINAL SEALED BY ANTHONY L. MORRONI 11/30/11 E012875

PROJECT ENGINEER: ORIGINAL SEALED BY DARREN G. BAUNE 11/30/11 No. C68899

VICE PRESIDENT: ORIGINAL SEALED BY MICHAEL JAMES BRITTEN 11/30/11 No. C27729

carollo

CITY OF TURLOCK INC. 1908

STANISLAUS COUNTY, CALIFORNIA

HARDING DRAIN BYPASS

PUMP STATION AND PIPELINE

ELECTRICAL

CONDUIT AND CABLE SCHEDULE

VERIFY SCALES

BAR IS ONE INCH ON ORIGINAL DRAWING

0 1"

IF NOT ONE INCH ON THIS SHEET, ADJUST SCALES ACCORDINGLY

JOB NO. 6918B.10

DRAWING NO. CSE04

SHEET NO. 94 OF 107

Last Saved By: $(GETPROP)??

FILENAME: c:\pw_working\projectwise\crollins\dms60443\G-BDR 6-08-14 12:09pm CRollins XREFS: $(XREFS)??

REV	DATE	BY	DESCRIPTION

RECORD DRAWINGS

DESIGNED GRS
DRAWN PMT
CHECKED KAO
DATE MAY 2012

DISCIPLINE ENGINEER: ORIGINAL SEALED BY ANTHONY L. MORRONI 11/30/11 E012875

PROJECT ENGINEER: ORIGINAL SEALED BY DARREN G. BAUNE 11/30/11 No. C68899

VICE PRESIDENT: ORIGINAL SEALED BY MICHAEL JAMES BRITTEN 11/30/11 No. C27729

carollo

CITY OF TURLOCK INC. 1908

STANISLAUS COUNTY, CALIFORNIA

HARDING DRAIN BYPASS
PUMP STATION AND PIPELINE
ELECTRICAL
CONDUIT AND CABLE SCHEDULE

VERIFY SCALES
BAR IS ONE INCH ON ORIGINAL DRAWING
0 1"
IF NOT ONE INCH ON THIS SHEET, ADJUST SCALES ACCORDINGLY

JOB NO. 6918B.10
DRAWING NO. CSE05
SHEET NO. 95 OF 107

Last Saved By: $(GETPROP)??

FILENAME: c:\pw_working\projectwise\crollins\dms60443\G-BDR 6-08-14 01:17pm CRollins XREFS: $(XREFS)??

GENERAL NOTES

1. UNLESS OTHERWISE NOTE, ALL LIGHTING AND RECEPTACLE CIRCUITS SHALL BE 2#12, #12G IN 3/4"C WHERE EXPOSED, AND 1"C IN SLAB.
2. FOR LIGHTING CIRCUITS THAT INCLUDE 3-WAY SWITCHES, CONDUIT SIZE AND NUMBER OF CONDUCTORS SHALL BE ADJUSTED AS REQUIRED FOR PROPER CIRCUIT OPERATION.
3. FOR LIGHTING CIRCUITS THAT INCLUDE EMERGENCY LIGHT FIXTURES, CONDUIT SIZE AND NUMBER OF CONDUCTORS SHALL BE ADJUSTED AS REQUIRED FOR PROPER CIRCUIT OPERATION.

NOTES

1. LCP-EF-100 & LCP-EF-200 CONTAIN CONTROLS, STARTER, SHORT CIRCUIT, AND OVERLOAD PROTECTION FOR THEIR ASSOCIATED EXHAUST FANS.
2. SEE PSE04 FOR CONTINUATION.

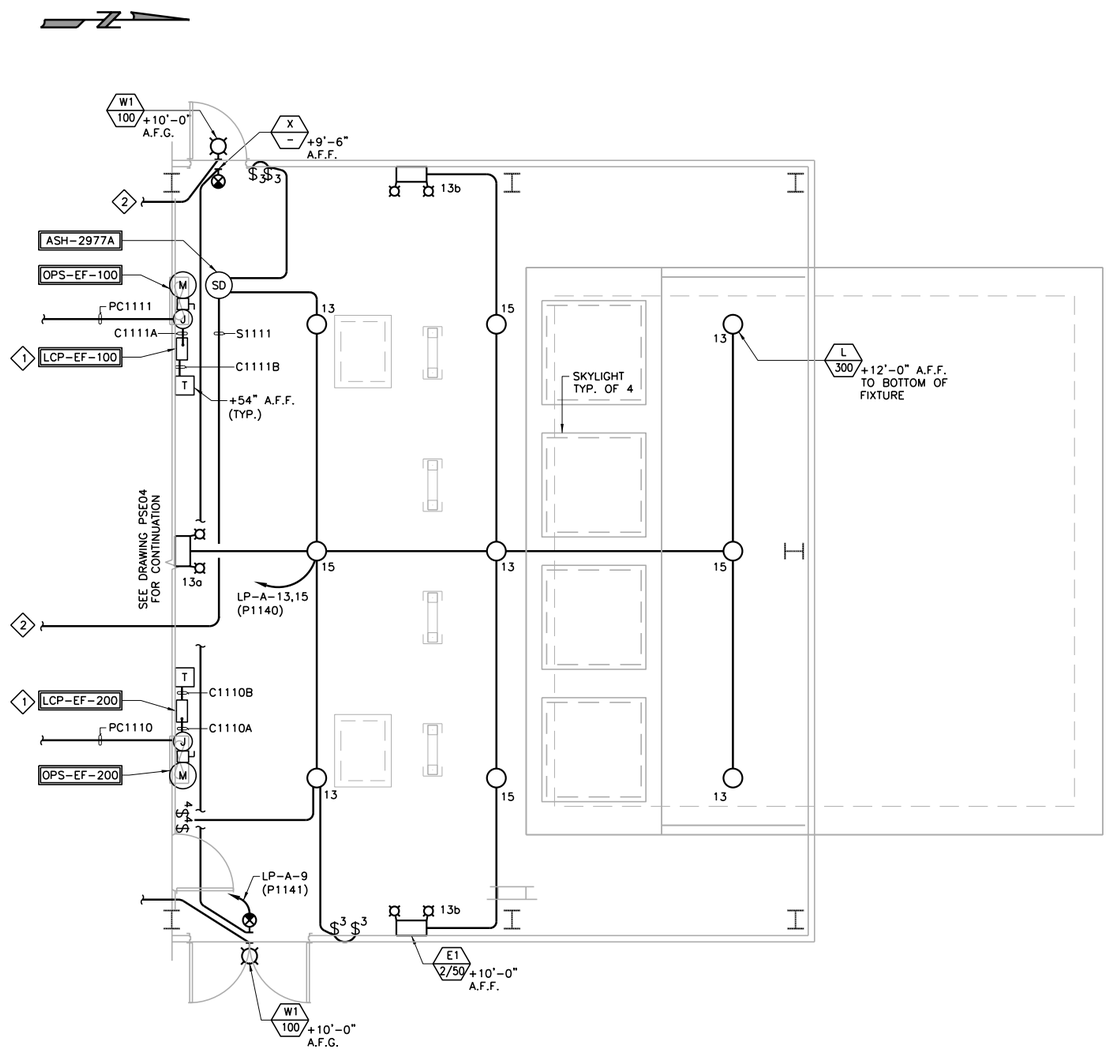

A / GE02 OUTFALL PUMP STATION LIGHTING PLAN

SCALE: 1/4"=1'-0"
FILE: –

REV	DATE	BY	DESCRIPTION
			RECORD DRAWINGS

DESIGNED GRS
DRAWN PMT
CHECKED KAO
DATE MAY 2012

DISCIPLINE ENGINEER: ORIGINAL SEALED BY ANTHONY L. MORRONI 11/30/11 E012875
PROJECT ENGINEER: ORIGINAL SEALED BY DARREN G. BAUNE 11/30/11 No. C68899
VICE PRESIDENT: ORIGINAL SEALED BY MICHAEL JAMES BRITTEN 11/30/11 No. C27729

carollo

CITY OF TURLOCK INC. 1908
STANISLAUS COUNTY, CALIFORNIA

HARDING DRAIN BYPASS
PUMP STATION AND PIPELINE
ELECTRICAL
OUTFALL PUMP STATION
HVAC AND LIGHTING PLAN

VERIFY SCALES
BAR IS ONE INCH ON ORIGINAL DRAWING
0 1"
IF NOT ONE INCH ON THIS SHEET, ADJUST SCALES ACCORDINGLY

JOB NO. 6918B.10
DRAWING NO. PSE01
SHEET NO. 96 OF 107

Last Saved By: $(GETPROP)??
FILENAME: c:\pw_working\projectwise\crollins\dms60443\G-BDR 6-08-14 01:43pm CRollins XREFS: $(XREFS)??

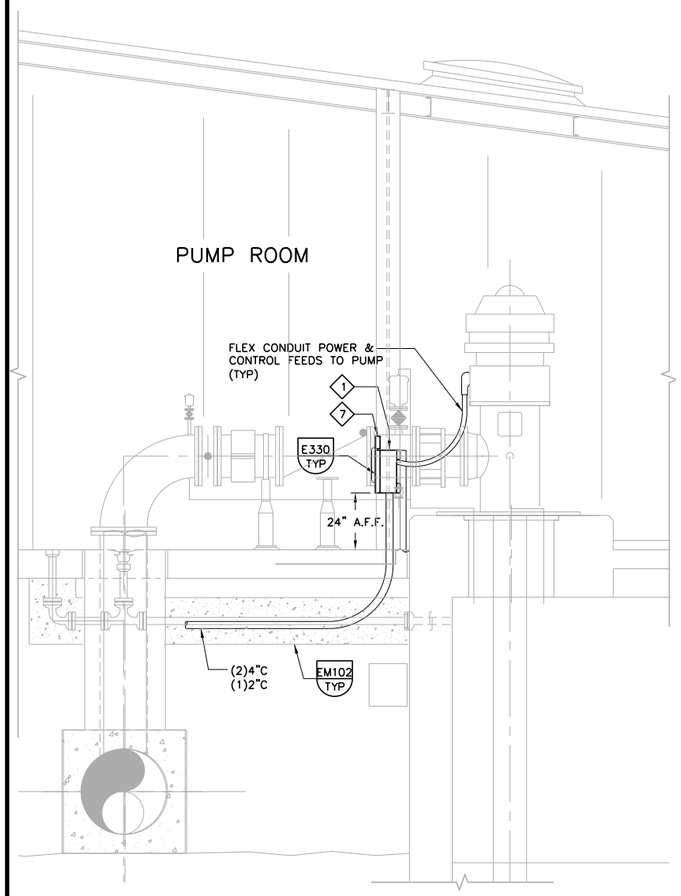

B — PUMP FEED DETAIL

NEMA 4X

SCALE: 3/8"=1'-0"
FILE: –

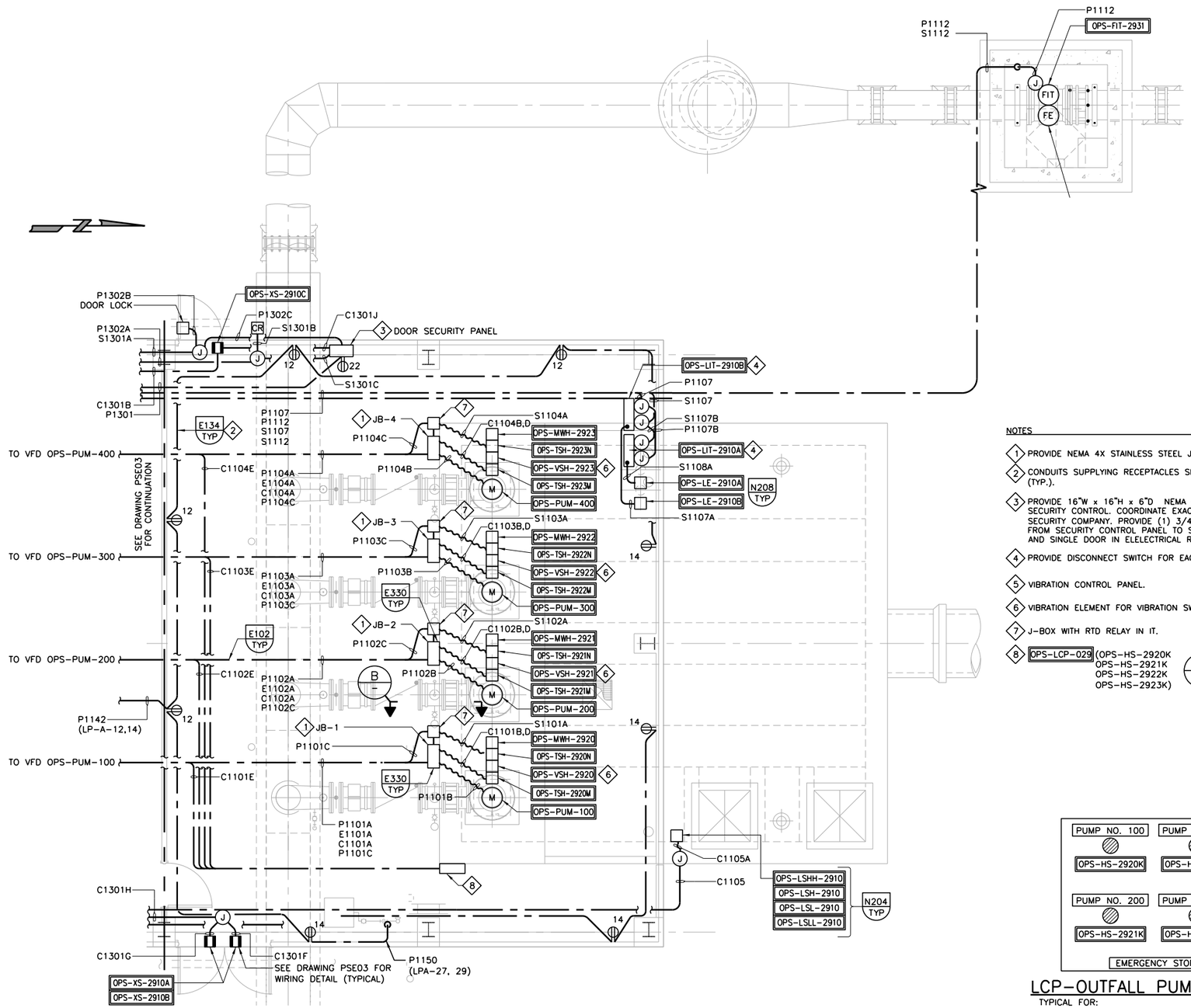

A — OUTFALL PUMP STATION POWER PLAN

GE02

SCALE: 1/4"=1'-0"
FILE: –

NOTES

1. PROVIDE NEMA 4X STAINLESS STEEL JUNCTION BOX.
2. CONDUITS SUPPLYING RECEPTACLES SHALL BE LOCATED IN SLAB (TYP.).
3. PROVIDE 16"W x 16"H x 6"D NEMA 4X ENCLOSURE FOR DOOR SECURITY CONTROL. COORDINATE EXACT REQUIREMENTS WITH SECURITY COMPANY. PROVIDE (1) 3/4" CONDUIT WITH PULL CORD FROM SECURITY CONTROL PANEL TO SINGLE DOOR IN PUMP ROOM AND SINGLE DOOR IN ELELECTRICAL ROOM.
4. PROVIDE DISCONNECT SWITCH FOR EACH LIT.
5. VIBRATION CONTROL PANEL.
6. VIBRATION ELEMENT FOR VIBRATION SWITCH.
7. J-BOX WITH RTD RELAY IN IT.
8. OPS-LCP-029 (OPS-HS-2920K, OPS-HS-2921K, OPS-HS-2922K, OPS-HS-2923K) — C –

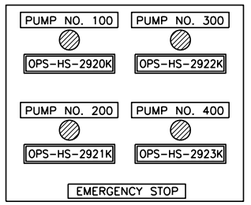

LCP-OUTFALL PUMP STATION

TYPICAL FOR:

OPS-LCP-029 NEMA4X

C — OPS-LCP-029 DETAIL

REV	DATE	BY	DESCRIPTION

RECORD DRAWINGS

DESIGNED GRS
DRAWN PMT
CHECKED KAO
DATE MAY 2012

DISCIPLINE ENGINEER: ORIGINAL SEALED BY ANTHONY L. MORRONI 11/30/11 E012875
PROJECT ENGINEER: ORIGINAL SEALED BY DARREN G. BAUNE 11/30/11 No. C68899
VICE PRESIDENT: ORIGINAL SEALED BY MICHAEL JAMES BRITTEN 11/30/11 No. C27729

carollo

CITY OF TURLOCK INC. 1908
STANISLAUS COUNTY, CALIFORNIA

HARDING DRAIN BYPASS
PUMP STATION AND PIPELINE
ELECTRICAL
OUTFALL PUMP STATION POWER PLAN

VERIFY SCALES
BAR IS ONE INCH ON ORIGINAL DRAWING
0 1"
IF NOT ONE INCH ON THIS SHEET, ADJUST SCALES ACCORDINGLY

JOB NO. 6918B.10
DRAWING NO. PSE02
SHEET NO. 97 OF 107

Last Saved By: $(GETPROP)??

FILENAME: c:\pw_working\projectwise\crollins\dms60443\G-BDR 6-08-14 01:21pm CRollins XREFS: $(XREFS)??

NOTES

1. PROVIDE 48" x 72" x 24"D ENCLOSURE.
2. PROVIDE PROVIDE 36"W x 48"H x 12"D WALL MOUNTED, NEMA 4X. ENCLOSURE. VERIFY ACTUAL SIZE REQUIREMENTS WITH RTU SUPPLIER AND CITY.
3. SEE DRAWING GE06 FOR ELEVATION.
4. CONNECT GROUND GRID TO GROUND CONDUCTOR IN DUCT BANK. CONNECT TO GROUND AT UTILITY CO. TRANSFORMER. SEE DRAWING GE02 FOR CONTINUATION.
5. PROVIDE 36"W x 72"H x 24"D MARSHALLING PANEL WITH BACK PANEL AND SCREW TYPE TERMINAL STRIPS AS REQUIRED PLUS 25% SPARE TERMINALS.
6. NEMA 4X DISCONNECT FURNISHED WITH OPS-AC-700.
7. COMBINATION STARTER FOR OPS-FC-100.
8. ALL UNDERSLAB CONDUITS ENCASED IN CLSM.

GENERAL NOTES

1. ALL UNDERSLAB CONDUITS ENCASED IN CLSM.

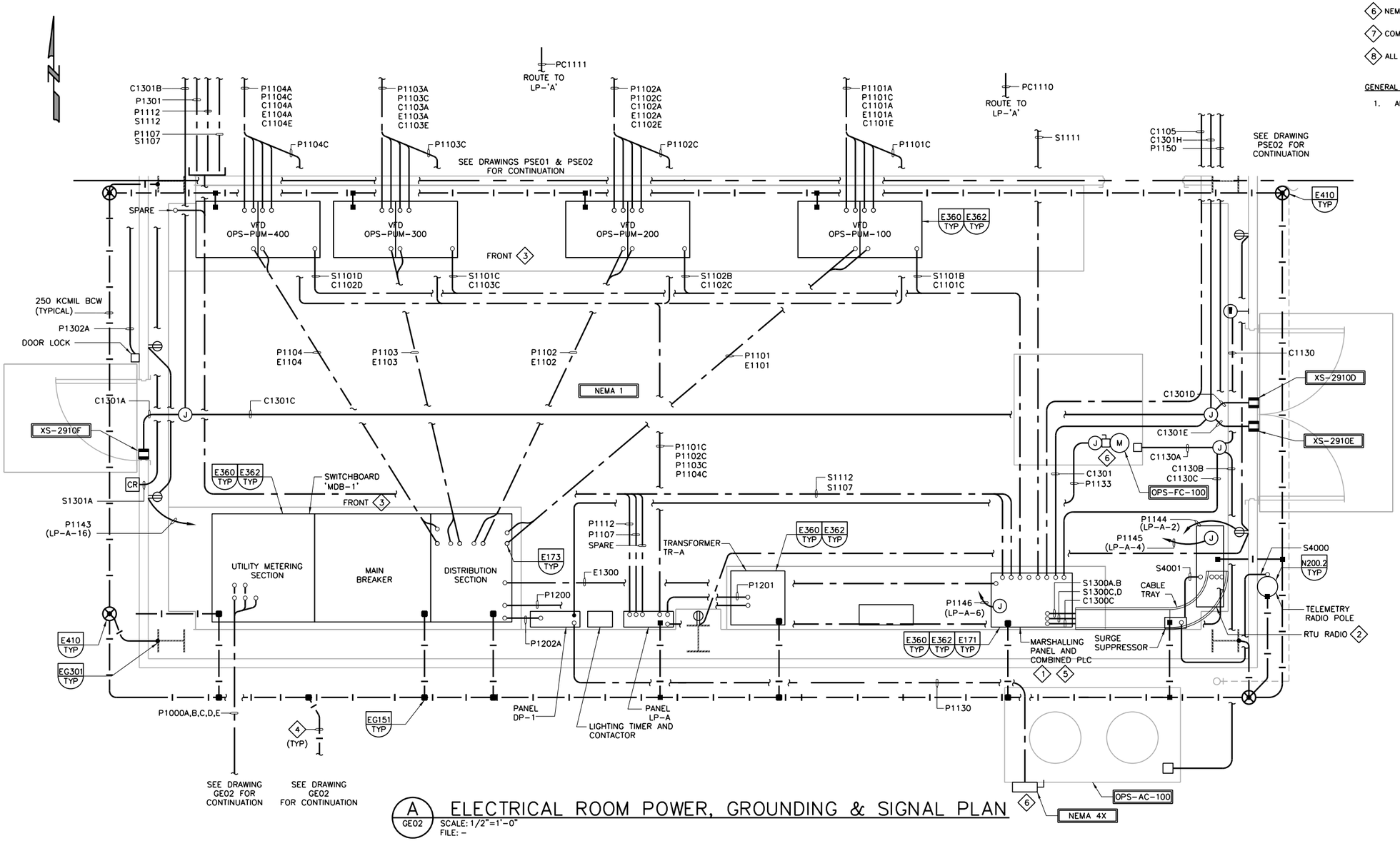

A GE02 ELECTRICAL ROOM POWER, GROUNDING & SIGNAL PLAN

SCALE: 1/2"=1'-0"
FILE: –

REV	DATE	BY	DESCRIPTION

RECORD DRAWINGS

DESIGNED GRS
DRAWN PMT
CHECKED KAO
DATE MAY 2012

DISCIPLINE ENGINEER: ORIGINAL SEALED BY ANTHONY L. MORRONI 11/30/11 E012875
PROJECT ENGINEER: ORIGINAL SEALED BY DARREN G. BAUNE 11/30/11 No. C68899
VICE PRESIDENT: ORIGINAL SEALED BY MICHAEL JAMES BRITTEN 11/30/11 No. C27729

carollo

CITY OF TURLOCK INC. 1908
STANISLAUS COUNTY, CALIFORNIA

HARDING DRAIN BYPASS
PUMP STATION AND PIPELINE
ELECTRICAL
ELECTRICAL ROOM POWER, GROUNDING & SIGNAL PLAN

VERIFY SCALES
BAR IS ONE INCH ON ORIGINAL DRAWING
0 1"
IF NOT ONE INCH ON THIS SHEET, ADJUST SCALES ACCORDINGLY

JOB NO. 6918B.10
DRAWING NO. PSE03
SHEET NO. 98 OF 107

Last Saved By: $(GETPROP)??

FILENAME: c:\pw_working\projectwise\crollins\dms60443\G-BDR 6-08-14 01:43pm CRollins XREFS: $(XREFS)??

NOTES

GENERAL NOTES

1. UNLESS OTHERWISE NOTE, ALL LIGHTING AND RECEPTACLE CIRCUITS SHALL BE 2#12, #12G IN 3/4"C WHERE EXPOSED, AND 1"C IN SLAB.
2. FOR LIGHTING CIRCUITS THAT INCLUDE 3-WAY SWITCHES, CONDUIT SIZE AND NUMBER OF CONDUCTORS SHALL BE ADJUSTED AS REQUIRED FOR PROPER CIRCUIT OPERATION.
3. FOR LIGHTING CIRCUITS THAT INCLUDE EMERGENCY LIGHT FIXTURES, CONDUIT SIZE AND NUMBER OF CONDUCTORS SHALL BE ADJUSTED AS REQUIRED FOR PROPER CIRCUIT OPERATION.

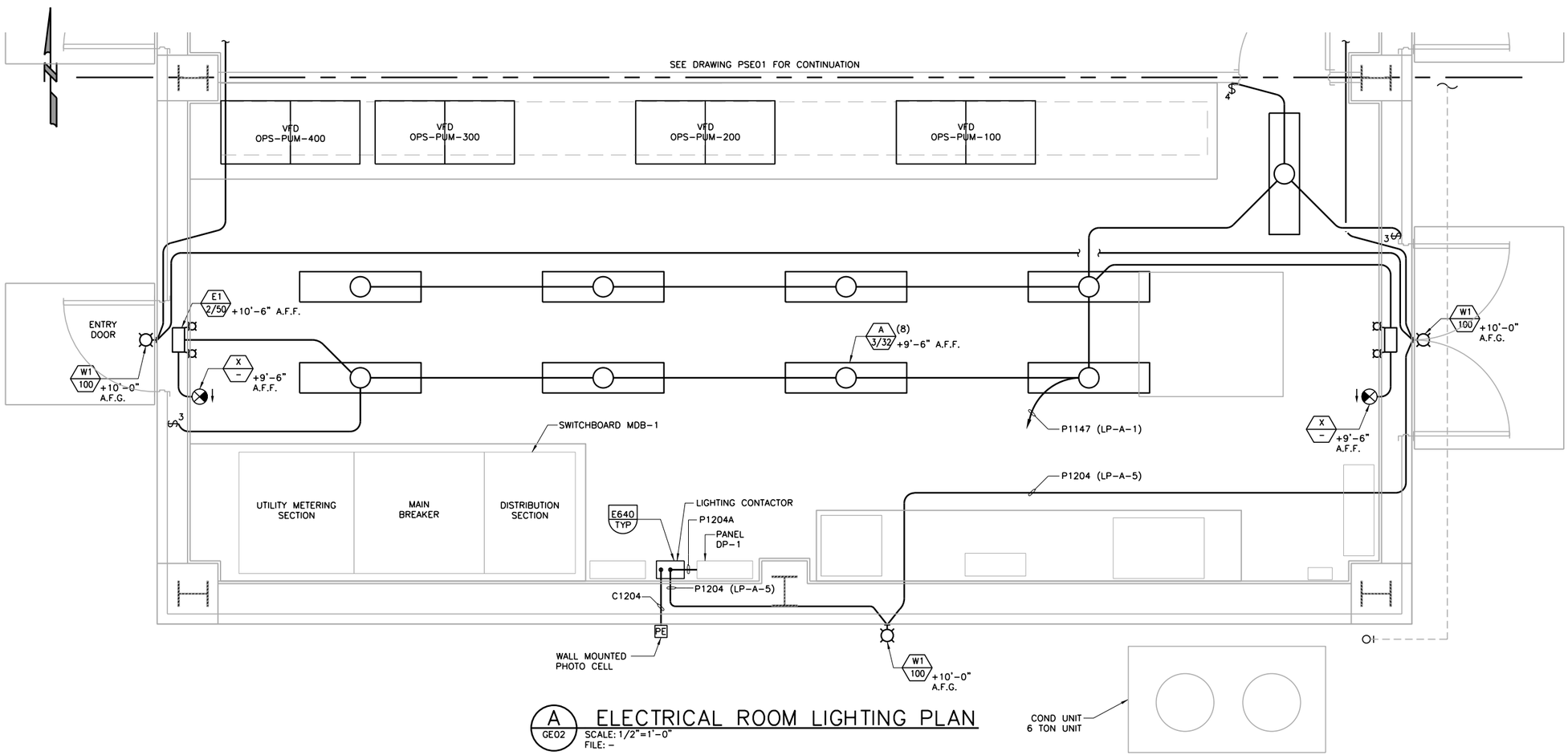

A / GE02 ELECTRICAL ROOM LIGHTING PLAN

SCALE: 1/2"=1'-0"
FILE: –

REV	DATE	BY	DESCRIPTION

RECORD DRAWINGS

DESIGNED GRS
DRAWN PMT
CHECKED KAO
DATE MAY 2012

DISCIPLINE ENGINEER: ORIGINAL SEALED BY ANTHONY L. MORRONI 11/30/11 E012875

PROJECT ENGINEER: ORIGINAL SEALED BY DARREN G. BAUNE 11/30/11 No. C68899

VICE PRESIDENT: ORIGINAL SEALED BY MICHAEL JAMES BRITTEN 11/30/11 No. C27729

carollo

CITY OF TURLOCK INC. 1908

STANISLAUS COUNTY, CALIFORNIA

HARDING DRAIN BYPASS
PUMP STATION AND PIPELINE
ELECTRICAL
ELECTRICAL ROOM LIGHTING PLAN

VERIFY SCALES
BAR IS ONE INCH ON ORIGINAL DRAWING
0 1"
IF NOT ONE INCH ON THIS SHEET, ADJUST SCALES ACCORDINGLY

JOB NO. 6918B.10
DRAWING NO. PSE04
SHEET NO. 99 OF 107

Last Saved By: $(GETPROP)??

FILENAME: c:\pw_working\projectwise\crollins\dms60443\G-BDR 6-08-14 12:09pm CRollins XREFS: $(XREFS)??

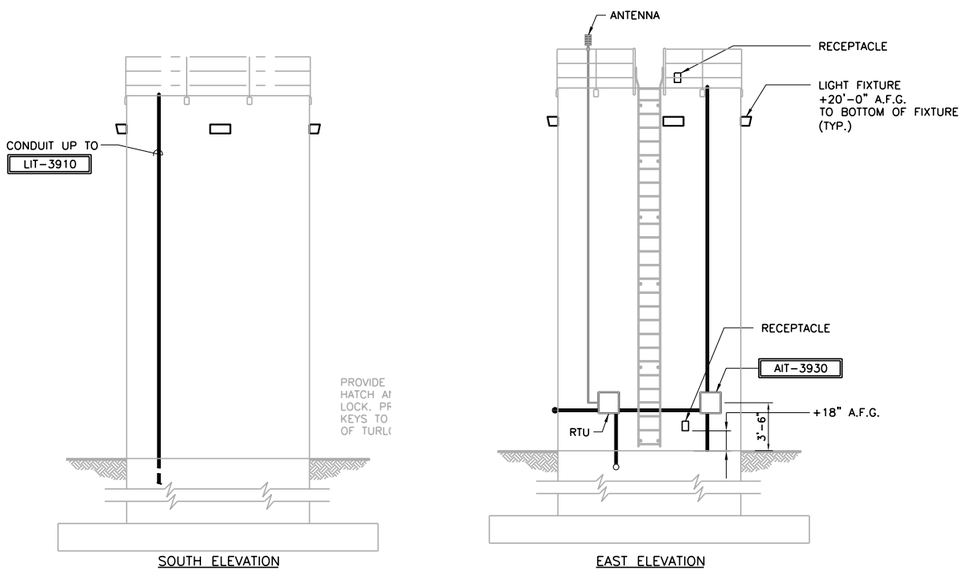

A ELEVATIONS

SCALE: 1/8" = 1'-0"
FILE: SFSS213

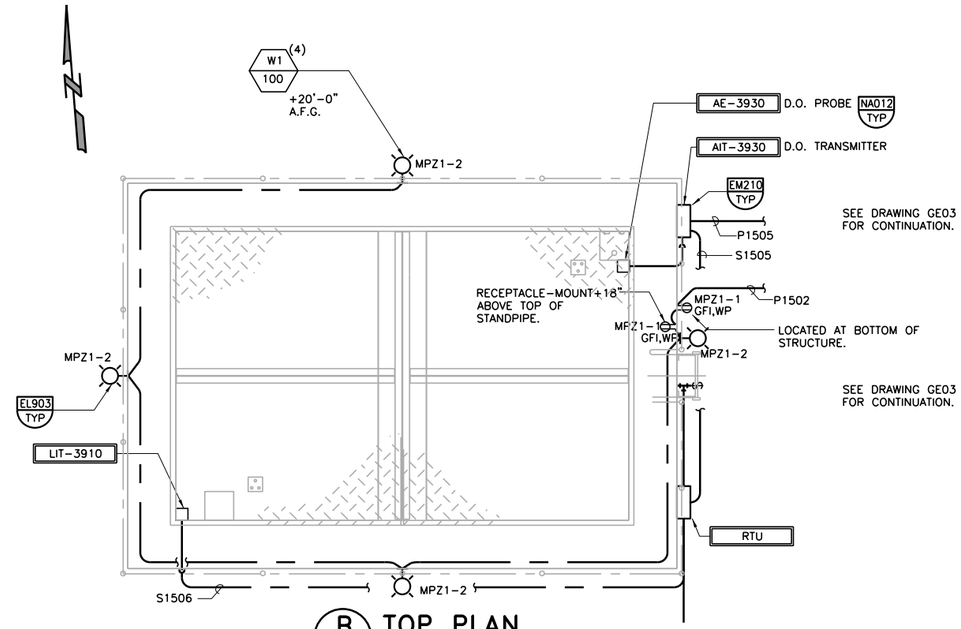

B TOP PLAN

SCALE: 3/8" = 1'-0"
FILE: SFSS213

SEE DRAWING GE03
FOR CONTINUATION

REV	DATE	BY	DESCRIPTION

RECORD DRAWINGS

DESIGNED GRS
DRAWN CJL
CHECKED
DATE MAY 2012

DISCIPLINE ENGINEER: •• ORIGINAL SEALED BY ANTHONY L. MORRONI 11/30/11 E012875 ••

PROJECT ENGINEER: •• ORIGINAL SEALED BY DARREN G. BAUNE 11/30/11 No. C68899 ••

VICE PRESIDENT: •• ORIGINAL SEALED BY MICHAEL JAMES BRITTEN 11/30/11 No. C27729 ••

carollo

CITY OF TURLOCK INC. 1908
STANISLAUS COUNTY, CALIFORNIA

HARDING DRAIN BYPASS
PUMP STATION AND PIPELINE
ELECTRICAL
STANDPIPE STRUCTURE
LIGHTING & POWER PLAN & SECTIONS

VERIFY SCALES
BAR IS ONE INCH ON ORIGINAL DRAWING
0 1"
IF NOT ONE INCH ON THIS SHEET, ADJUST SCALES ACCORDINGLY

JOB NO. 6918B.10
DRAWING NO. RDE01
SHEET NO. 100 OF 107

Last Saved By: $(GETPROP)??
FILENAME: c:\pw_working\projectwise\crollins\dms60443\G-BDR 6-08-14 01:43pm CRollins XREFS: $(XREFS)??

INSTRUMENT OR FUNCTION SYMBOLS

XXX / XXX — INSTRUMENT IDENTIFICATION (SEE TABLES IN NEXT COLUMN)

- DASHED LINE — REAR-OF-PANEL MOUNTED INSTRUMENT
- NO LINE — FIELD MOUNTED INSTRUMENT
- SINGLE LINE — PRIMARY ACCESSIBLE/ FACE OF PANEL

LOOP NUMBER (& SUFFIX NO. IF REQUIRED)

XX / XXX — PLC, RTU OR SCADA FUNCTION, DISPLAY OR OPERATOR INTERFACE

ES 120V — XX / XXX — ELECTRICAL SUPPLY

LO LEVEL — XX / XXX — EVENT INDICATING LIGHTS
- ON = ON
- OO = ON & OFF LIGHTS
- GREEN = REQUIRED
- AMBER = ALARM
- RED = RUN

XX / XXX — FIELD INSTRUMENT

XX / XXX — PANEL MOUNTED INSTRUMENT

I — INTERLOCK LOGIC
- I: INTERLOCK
- VFD: VARIABLE FREQUENCY DRIVE
- RVSS: REDUCED VOLTAGE SOLID STATE
- FVNR: FULL VOLTAGE NON REVERSING

I — PLC OR RTU LOGIC

PLC BLOCK

PLC: I/O
- △ = DIGITAL INPUT = DI
- ▽ = DIGITAL OUTPUT = DO
- ▲ = ANALOG INPUT = AI
- ▼ = ANALOG OUTPUT = AO

FBO= FURNISHED BY OTHERS
FBV= FURNISHED BY VENDOR

EQUIPMENT TAGGING IS AS FOLLOWS:

01-FIT-101

- OPS OR RDF AREA
- DEVICE TYPE
- LOOP/EQUIPMENT NUMBER

INSTRUMENT TAG IDENTIFICATION LETTERS

LETTER	FIRST LETTER: MEASURED OR INITIATING VARIABLE	FIRST LETTER: MODIFIER	SUCCEEDING LETTERS: READOUT OR PASSIVE FUNCTION	SUCCEEDING LETTERS: OUTPUT FUNCTION	SUCCEEDING LETTERS: MODIFIER
A	ANALYSIS		ALARM	START OR OPEN AND ANALOG CONTROL	
B	BURNER FLAME		USER'S CHOICE	STOP OR CLOSE COMMAND	USER'S CHOICE
C	CONDUCTIVITY (ELECTRICAL)		CLOSED	CONTROLLER	
D	DENSITY	DIFFERENTIAL			
E	VOLTAGE (EMF)		PRIMARY ELEMENT		
F	FLOW	RATIO			
G	FIRE		GLASS		
H	HAND (MANUALLY INITIATED)				HIGH
I	CURRENT (ELEC)		INDICATE		
J	POWER	SCAN			
K	TIME OR TIME SCHEDULE			CONTROL STA.	
L	LEVEL		LIGHT(PILOT)		LOW
M	MOISTURE OR HUMIDITY				MIDDLE OR INTERMEDIATE
N	EQUIPMENT STATUS (RUN)		ISOLATOR		
O	USER'S CHOICE		ORIFICE/OPENED		
P	PRESSURE OR PNEUMATIC		POINT		
Q	QUANTITY	INTEGRATE TOTALIZE			
R	RADIOACTIVITY		RECORD OR PRINT		
S	SPEED/FREQUENCY	SAFETY		SWITCH	
T	TEMPERATURE			TRANSMITTER	TROUBLE
U	MULTIVARIABLE		MULTIFUNCTION	MULTIFUNCTION	LOW ALARM
V	VIBRATION			VALVE DAMPER OR LOUVER	HIGH ALARM
W	WEIGHT, FORCE OR TORQUE		WELL		
X	UNCLASSIFIED		UNCLASSIFIED	UNCLASSIFIED	UNCLASSIFIED
Y	EVENT, STATE OR PRESENCE (REMOTE)			RELAY OR COMPUTE	
Z	POSITION			DRIVER, ACTUATOR	

HANDSWITCHES & PILOT DEVICES

ABBREVIATION	FUNCTION	CONTACT TYPE	ABBREVIATION	FUNCTION	CONTACT TYPE
ALT	ALTERNATE	MT	OSC	OPEN-STOP-CLOSE	MT
AM	AUTO-MANUAL	MT	RESET	RESET	MT
CLOSE	CLOSE	MM	SELECT	SELECT	MT
FR	FORWARD-REVERSE	MT	S/D	SHUTDOWN	MM
FREQ	FREQUENCY	MT	SILENCE	SILENCE	MM
HOA	HAND-OFF-AUTO	MT	SLOS	START/LOCKOUT-STOP	MT
HOR	HAND-OFF-REMOTE	MT	SPEED	SPEED	MT
JOG	JOG	MM	SS	START-STOP	MM
JOHC	JOG OPEN-HOLD CLOSE	MM	START	START	MT
LL	LEAD-LAG	MT	STOP	STOP	MT
LOR	LOCAL-OFF-REMOTE	MT	TIME	TIME/TIMER	MT
LOS	LOCKOUT STOP	MT			
LS	LEAD-STANDBY	MT			
OC	OPEN-CLOSE	MM			
OO	ON-OFF	MT			
OOL	ON LINE-OFF LINE	MT			
OOR	ON-OFF-REMOTE	MT			
OPEN	OPEN	MM			
OSC	OPEN-STOP-CLOSE	MT			
RESET	RESET	MT			
SELECT	SELECT	MT			

MT = MAINTAINED MM = MOMENTARY

EQUIPMENT NAMING CONVENTION

DEVICE TYPE			
FDR	CHEMICAL FEEDER	G	GATE
FV	FLOW CONTROL VALVE	V	VALVE
MOV	MOTOR OPERATED VALVE	ME	MISC. EQUIPMENT
P	PUMP	SOL	SOLENOID
T	TANK	CFH	CHEMICAL FEED HOPPER

LINE SYMBOLS

- ELECTRICAL
- SOFTWARE OR DATA LINK THROUGH NETWORK
- PNEUMATIC SIGNAL
- PRIMARY PROCESS PIPE
- SECONDARY PROCESS PIPE
- PRIMARY OPEN CHANNEL
- SECONDARY OPEN CHANNEL

LOGIC SYMBOLS

- √n = Nth ROOT
- AND = AND
- OR = OR
- I = INTERLOCK
- N = NOT
- Σ = SUMMATION
- √ = SQUARE ROOT
- Δ = DELTA
- ∴ = THEREFORE
- Σ/n = AVERAGE
- MIN = MINIMUM SELECTED
- MAX = MAXIMUM SELECTED

INTERFACE IDENTIFICATION

N - # (1) — TO DRAWING "N - #" CONNECTION POINT 1

(2) N - # — FROM DRAWING "N - #" CONNECTION POINT 2

INTERFACE EXTERNAL TO P&ID'S

XXXX — EQUIPMENT NO.

PROCESS AREA CODES

00 (BLANK)	EXISTING PLANT EQUIPMENT
01	OUTFALL PUMP STATION (OPS)
02	RIVER DISCHARGE FACILITIES (RDF)

INSTRUMENT ABBREVIATIONS

DEN	DENSITY
DO	DISSOLVED OXYGEN
FL	FLUORIDE RESIDUAL
H2S	HYDROGEN SULFIDE
LEL	LOWER EXPLOSIVE LIMIT
O2	OXYGEN CONCENTRATION
PART	PARTICLE COUNT
PH	HYDROGEN ION CONC.
SC	STREAMING CURRENT
S/D	SHUTDOWN
SS	SUSPENDED SOLIDS
TURB	TURBIDITY

GATE AND VALVE SYMBOLS

- GATE VALVE OR UNDEFINED VALVE
- CHECK
- BALL VALVE
- BUTTERFLY
- GLOBE VALVE
- PLUG VALVE
- DIAPHRAGM
- NEEDLE
- BACKFLOW PREVENTOR
- BALL CHECK VALVE
- AIR RELEASE OR AIR/VACUUM VALVE
- PRESSURE RELIEF OR SAFETY
- PRESSURE REGULATOR(EXTERNAL)
- 3-WAY
- ANGLE VALVE
- SLIDE GATE
- SLUICE GATE
- STOP GATE

PRIMARY ELEMENT SYMBOLS

- SONIC FLOWMETER (DOPPLER OR TRANSIT TIME)
- M — MAGNETIC FLOWMETER
- VENTURI FLOWMETER
- PARSHALL FLUME
- FI — VARIABLE AREA FLOW INDICATOR (ROTAMETER)
- FLOW NOZZLE
- LS — TIPPING FLOAT LEVEL SWITCH
- LIT — SUBMERSIBLE PRESSURE TRANSMITTER USED AS LEVEL INDICATION/TRANSMITTER
- LE — SONIC LEVEL SENSOR
- LE, A/S — BUBBLER LEVEL SENSOR
- LE — ADMITTANCE (ADM) LEVEL SENSOR
- LS — CAPACITANCE LEVEL SWITCH
- LS — FLOAT SWITCH

VALVE ACTUATORS

- S — SOLENOID
- DIAPHRAGM
- P — PNUEMATIC W/ POSITIONER

MOTOR DRIVES

- VFD — VARIABLE FREQUENCY CONTROLLER (ELEC AC)
- M — ELECTRIC MOTOR

VALVE LABELS

NO	NORMALLY OPEN
NC	NORMALLY CLOSED
FC	FAILS CLOSED
FO	FAILS OPEN
FIP	FAILS IN LAST POSITION
LO	LOCK OPEN
LC	LOCK CLOSE

PUMP/COMPRESSOR SMBOLS

- M — CENTRIFUGAL PUMP
- M — SUBMERSIBLE SUMP PUMP
- M — VERTICAL TURBINE PUMP

MISC SYMBOLS

- UNION
- FLEXIBLE CONNECTION
- STRAINER
- BLIND FLANGE
- CONCENTRIC REDUCER
- DIAPHRAGM SEAL
- WATER LEVEL

GENERAL NOTES:

1. P&ID'S ARE FOR INFORMATION ON PROCESS CONTROL CONCEPTS AND INSTRUMENTATION REQUIREMENTS ONLY, REFER TO PLANS AND SPECIFICATIONS FOR DETAILS FOR PIPING.
2. THIS IS A STANDARD LEGEND. THEREFORE NOT ALL OF THIS INFORMATION MAY BE USED ON THIS CONTRACT/PROJECT.
3. SEE ELECTRICAL, MECHANICAL AND CIVIL DISCIPLINES LEGEND AND SYMBOLS SHEETS FOR ADDITIONAL INFORMATION.

RECORD DRAWINGS

REV	DATE	BY	DESCRIPTION

DESIGNED AEB
DRAWN CGR
CHECKED PCK
DATE MAY 2012

DISCIPLINE ENGINEER: ORIGINAL SEALED BY ANTHONY L. MORRONI 11/30/11 E012875
PROJECT ENGINEER: ORIGINAL SEALED BY DARREN G. BAUNE 11/30/11 No. C68899
VICE PRESIDENT: ORIGINAL SEALED BY MICHAEL JAMES BRITTEN 11/30/11 No. C27729

carollo

CITY OF TURLOCK INC. 1908
STANISLAUS COUNTY, CALIFORNIA

HARDING DRAIN BYPASS
PUMP STATION AND PIPELINE
PROCESS AND INSTRUMENTATION
LEGEND AND SYMBOLS

VERIFY SCALES
BAR IS ONE INCH ON ORIGINAL DRAWING
0 — 1"
IF NOT ONE INCH ON THIS SHEET, ADJUST SCALES ACCORDINGLY

JOB NO. 6918B.10
DRAWING NO. GN-1
SHEET NO. 101 OF 107

Last Saved By: $(GETPROP)??
FILENAME: c:\pw_working\projectwise\crollins\dms60443\G-BDR 6-03-14 02:47pm CRollins XREFS: $(XREFS)??

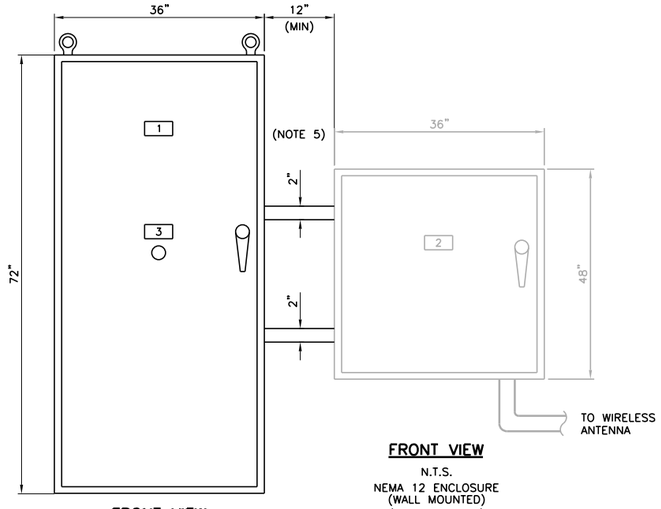

FRONT VIEW
N.T.S.
NEMA 12 ENCLOSURE
(WALL MOUNTED)
(48 x 36 x 12)

RTU PANEL
(REFER TO TABLE)

FRONT VIEW
N.T.S.
NEMA 12 ENCLOSURE
(FREE STANDING)
(72 x 36 x 24)
ASA 61 GRAY POLYURETHANE EXTERIOR
& WHITE ENAMEL INTERIOR
(TYPICAL)

MARSHALLING/TERMINAL PANEL

	LOCAL PLC	MARSHALLING PANEL	HSQ RTU	RTU ENCLOSURE	RADIO ANTENNA
SUPPLIED BY	CONTRACTOR	CONTRACTOR	OWNER	CONTRACTOR	OWNER
INSTALLED BY	CONTRACTOR	CONTRACTOR	OWNER	CONTRACTOR	OWNER
WIRED BY	CONTRACTOR	CONTRACTOR	NOTE 7, 9	NOTE 7, 9	NOTE 7, 9
TESTED BY	CONTRACTOR	CONTRACTOR	NOTE 8, 9	NOTE 8, 9	NOTE 8, 9

NOTES:

1. PANEL DIMENSIONS AND ARRANGEMENT SHOWN ARE APPROXIMATE & DIRECTIONAL IN NATURE ONLY. FINAL DESIGN SHALL ACCOMODATE ALL REQUIREMENT PER SPECIFICATION AND FEATURES SHOWN HERE. CONTRACTOR SHALL SUBMIT SHOP DRAWINGS OF PANEL ARRANGEMENT & BILL OF MATERIAL FOR APPROVAL.
2. MARSHALLING PANELS SHOWN SHALL BE FREE-STANDING TYPE, WITH BOTTOM CONDUIT ENTRY ARRANGEMENT AS INDICATED.
3. PROVIDE TERMINALS IN MARSHALLING PANEL FOR EXTERNAL DEVICES CONNECTION. FIELD DEVICES SHALL NOT CONNECT DIRECT TO I/O MODULE ADAPTERS OR CONTROL DEVICES.
4. PROVIDE RED WARNING NAMEPLATE: **"WARNING – LIVE EXTERNALLY POWERED 120 VAC CIRCUITS"**.
5. PROVIDE MINIMUM TWO 2" CONDUITS BETWEEN THE MARSHALLING AND THE RTU PANELS.
6. PROVIDE SEPARATION FOR WIRING AND TERMINALS BETWEEN 4-20 MA/24 VDC CIRCUITS AND 120 VAC CIRCUITS.
7. FOR RTU WIRING, INTERNAL WIRING BY RTU SUPPLIER AND WIRING FROM RTU TO MARSHALLING PANEL AND TO ANTENNA SHALL BE BY THE CITY OF TURLOCK.
8. THIS SHALL BE A JOINT-TEST BY THE OWNER'S PERSONNEL AND THE CONTRACTOR. THE OWNERS'S PERSONNEL SHALL BE DOING THE FUNCTIONAL TESTING AND THE CONTRACTOR SHALL ASSIST IN FIXING THE WIRING, CALIBRATION AND INSTALLATION PROBLEMS.
9. REFER TO SECTION 17750 OF SPECIFICATIONS FOR ADDITIONAL REQUIREMENTS FOR RADIO INSTALLATION.

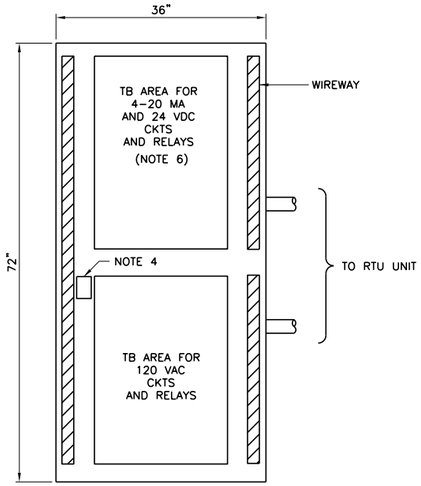

FRONT VIEW (DOOR REMOVED)
MARSHALLING/TERMINAL PANEL

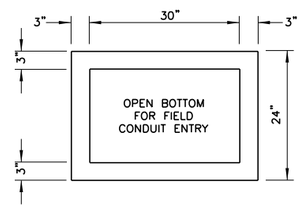

PLAN BOTTOM VIEW
(TYPICAL FOR MARSHALLING/TERMINAL PANEL)

NAMEPLATE LEGEND	
NO.	TITLE
1	MARSHALLING PANEL
2	RTU
3	INTRUSION SWITCH ARM/DISARM
4	PLC PANEL

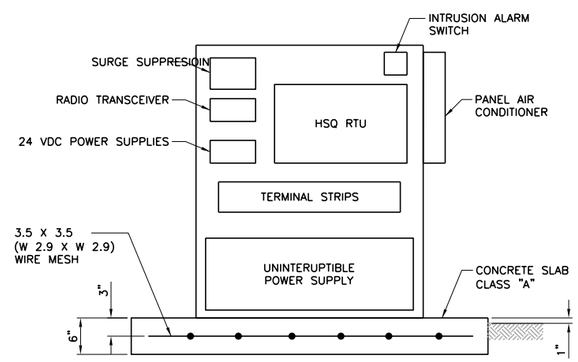

NOTES:

1. PROVIDE WHERE SHOWN ON DRAWINGS
2. PROVIDE FREE STANDING ENCLOSURE WITH CONCRETE BASE SHOWN. FLUSH MOUNT PANEL ON BASE WITHOUT FREE STANDING LEGS.
3. MINIMUM SIZE OF ENCLOSURE: 36" H X 30" W X 18" D, MAXIMUM SIZE OF ENCLOSURE: 40" H X 32" W X 18" D. CONCRETE PAD SHALL BE SIZED FOR THE ENCLOSURE AND SHALL EXCEED THE SIZE OF THE BASE OF THE ENCLOSURE BY 12" ON EACH SIDE.
4. VERIFY LOCATION OF UNDERGOUND UTILITIES AND PROVIDE GROUND ROD AND INSTALLATION AS SHOWN IN N200-TYP.
5. PROVIDE 1/2" THICK PVC INSULATOR TO ISOLATE BASE OF ENCLOSURE FROM CONCRETE SLAB.
6. RTU ENCLOSURE PROVIDED BY THE CONTRACTOR. HSQ RTU AND ALL COMPONENTS FURNISHED AND INSTALLED BY OWNER IN CONTRACTOR PROVIDED RTU ENCLOSURE.

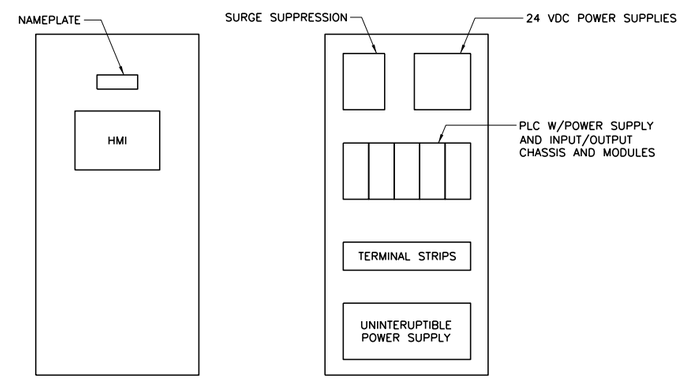

FRONT VIEW
(72" H X 36" W X 18" D)

FRONT VIEW (DOOR REMOVED)

1 MARSHALLING/TERMINAL PANEL (MTP)

2 STANDPIPE RTU ENCLOSURE

4 PLC PANEL

REV	DATE	BY	DESCRIPTION
			RECORD DRAWINGS

DESIGNED AEB
DRAWN CGR
CHECKED PCK
DATE MAY 2012

DISCIPLINE ENGINEER: ORIGINAL SEALED BY ANTHONY L. MORRONI 11/30/11 E012875
PROJECT ENGINEER: ORIGINAL SEALED BY DARREN G. BAUNE 11/30/11 No. C68899
VICE PRESIDENT: ORIGINAL SEALED BY MICHAEL JAMES BRITTEN 11/30/11 No. C27729

carollo

CITY OF TURLOCK INC. 1908
STANISLAUS COUNTY, CALIFORNIA

HARDING DRAIN BYPASS
PUMP STATION AND PIPELINE
INSTRUMENTATION
DETAILS

VERIFY SCALES
BAR IS ONE INCH ON ORIGINAL DRAWING
0 1"
IF NOT ONE INCH ON THIS SHEET, ADJUST SCALES ACCORDINGLY

JOB NO. 6918B.10
DRAWING NO. GN-2
SHEET NO. 102 OF 107

Last Saved By: $(GETPROP)??
FILENAME: c:\pw_working\projectwise\crollins\dms60443\G-BDR 6-03-14 02:47pm CRollins XREFS: $(XREFS)??

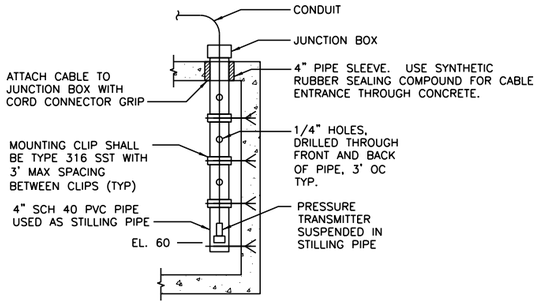

1 SUBMERSIBLE PRESSURE TRANSMITTER MOUNTING AT OUTFALL PUMP STATION

(TYPICAL FOR 2 TRANSMITTERS)

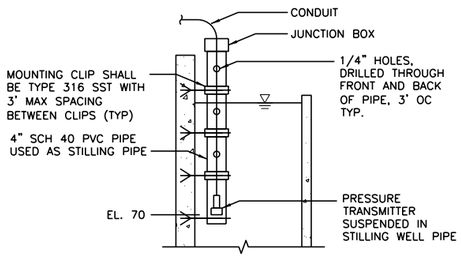

2 SUBMERSIBLE PRESSURE TRANSMITTER MOUNTING AT STANDPIPE

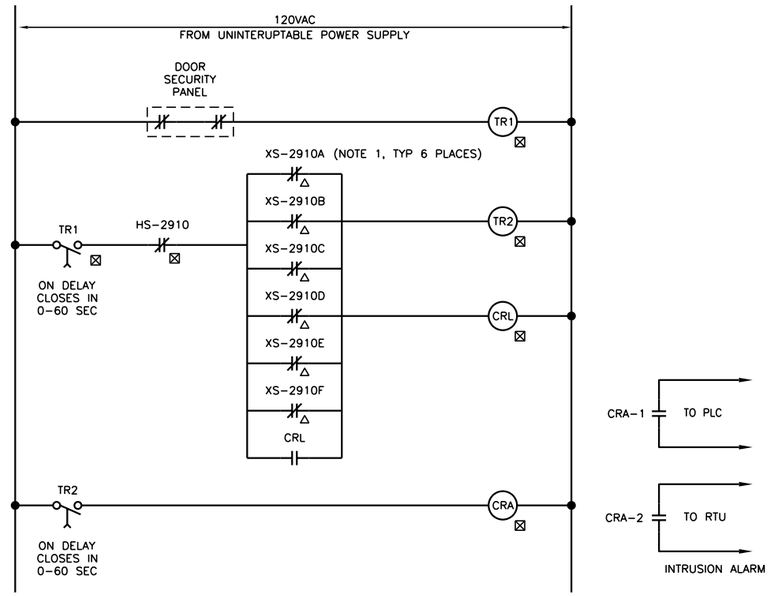

LEGEND:

- ⊠ AT MTP
- △ FIELD LOCATION
- ∗ AT MCC/VFD PANEL

NOTES:

1. NORMALLY CLOSED, HELD OPEN WHEN NORMAL.

3 INTRUSION ALARM SCHEMATIC

REV	DATE	BY	DESCRIPTION

RECORD DRAWINGS

DESIGNED AEB
DRAWN CGR
CHECKED PCK
DATE MAY 2012

DISCIPLINE ENGINEER: ORIGINAL SEALED BY ANTHONY L. MORRONI 11/30/11 E012875

PROJECT ENGINEER: ORIGINAL SEALED BY DARREN G. BAUNE 11/30/11 No. C68899

VICE PRESIDENT: ORIGINAL SEALED BY MICHAEL JAMES BRITTEN 11/30/11 No. C27729

carollo

CITY OF TURLOCK INC. 1908
STANISLAUS COUNTY, CALIFORNIA

HARDING DRAIN BYPASS
PUMP STATION AND PIPELINE
INSTRUMENTATION
CONTROL SCHEMATIC – 1

VERIFY SCALES
BAR IS ONE INCH ON ORIGINAL DRAWING
0 1"
IF NOT ONE INCH ON THIS SHEET, ADJUST SCALES ACCORDINGLY

JOB NO. 6918B.10
DRAWING NO. GN-3
SHEET NO. 103 OF 107

FILENAME: c:\pw_working\projectwise\crollins\dms60443\G-BDR 6-03-14 02:47pm CRollins XREFS: $(XREFS)??

Last Saved By: $(GETPROP)??

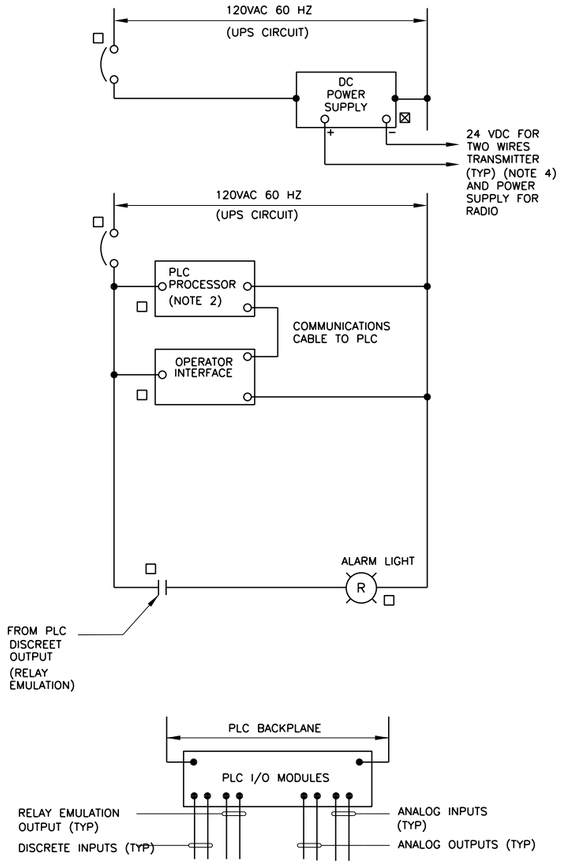

DETAIL NOTES:

1. PROVIDE CONNECTION TO AC POWER SOURCE AS SHOWN ON THE DRAWINGS.
2. FURNISH & INSTALL ADDITIONAL POWER SUPPLY FOR PLC REMOTE INPUT AND OUTPUT EQUIPMENT AS REQUIRED.
3. REFER TO P&ID DRAWINGS AND SPECIFICATIONS FOR NUMBER OF TERMINATIONS OF SIGNALS FROM FIELD TO PLC AND RTU MODULES, AND FOR ADDITIONAL REQUIREMENTS.
4. DC POWER SUPPLIES SHALL PROVIDE VOLTAGE NEEDED TO SENSE IF DRY FIELD INPUT CONTACTS ARE OPEN OR CLOSED.
5. PROVIDE INPUT/OUTPUT MODULES AT PLC AS REQUIRED.
6. RADIO TRANSCEIVER FURNISHED AND INSTALLED BY OWNER.
7. PROVIDE OPERATOR INTERFACE AT OUTFALL PLC PANEL.
8. PROVIDE UNINTERRUPTIBLE POWER SUPPLY (UPS) FOR EQUIPMENT IN PLC. SEE SECTION 17712 FOR REQUIREMENTS, 1000VA OR SIZED FOR 20 MINUTES BACKUP AT FULL LOAD, WHICHEVER IS THE GREATER.

1 – PLC AND POWER SUPPLY EQUIPMENT

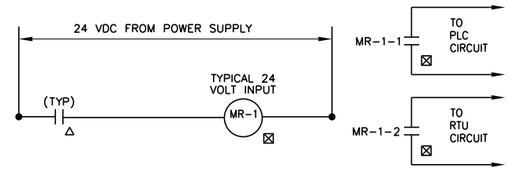

2 – DISCRETE INPUT TERMINATION
(TYPICAL)

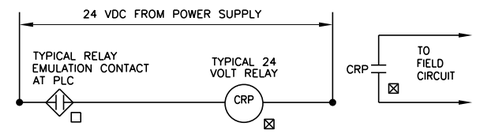

3 – DISCRETE OUTPUT FROM PLC
(TYPICAL)

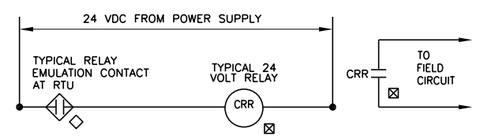

4 – DISCRETE OUTPUT FROM RTU
(TYPICAL)

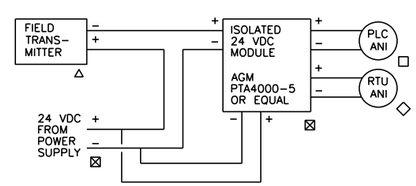

5 – TWO-WIRE ANALOG INPUT TERMINATION
(TYPICAL)

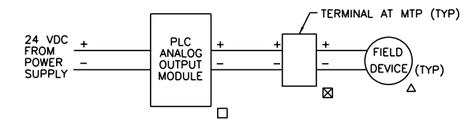

6 – ANALOG OUTPUT FROM PLC
(TYPICAL)

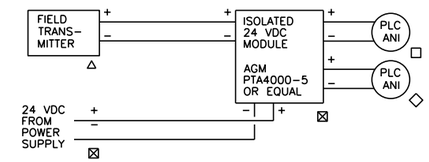

7 – FOUR-WIRE ANALOG INPUT TERMINATION
(TYPICAL)

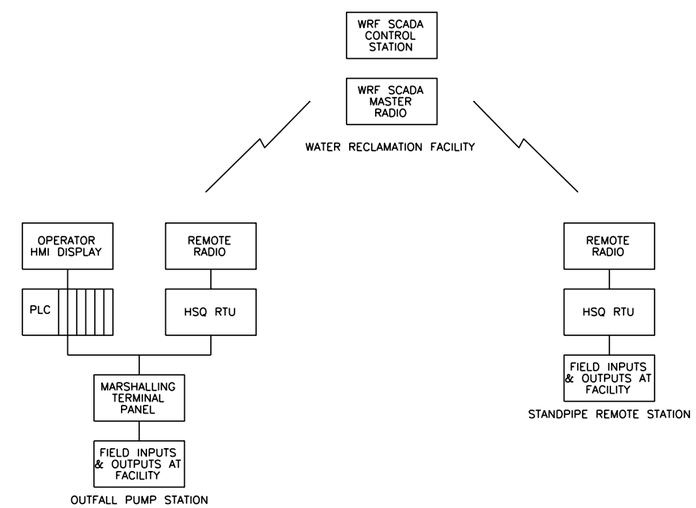

DETAIL NOTES:

1. RADIO DATA LINK SHALL BE 940 HZ AND AS DEFINED IN SPECS FOR DATA.
2. HSQ RTU IS FURNISHED, PROGRAMMED AND INSTALLED BY OWNER IN CONTRACTOR PROVIDED ENCLOSURE.

8 – CONTROL SYSTEM BLOCK DIAGRAM
NTS

LEGEND:

- △ – FIELD MOUNTED LOCATION
- □ – DEVICE MOUNTED AT PLC PANEL
- ◇ – DEVICE MOUNTED AT RTU PANEL
- ⊠ – DEVICE MOUNTED AT MARSHALLING/TERMINAL PANEL

REV	DATE	BY	DESCRIPTION
			RECORD DRAWINGS

DESIGNED AEB
DRAWN CGR
CHECKED PCK
DATE MAY 2012

DISCIPLINE ENGINEER: ORIGINAL SEALED BY ANTHONY L. MORRONI 11/30/11 E012875
PROJECT ENGINEER: ORIGINAL SEALED BY DARREN G. BAUNE 11/30/11 No. C68899
VICE PRESIDENT: ORIGINAL SEALED BY MICHAEL JAMES BRITTEN 11/30/11 No. C27729

carollo

CITY OF TURLOCK INC. 1908
STANISLAUS COUNTY, CALIFORNIA

HARDING DRAIN BYPASS
PUMP STATION AND PIPELINE
PROCESS AND INSTRUMENTATION
CONTROL SCHEMATIC – 2

VERIFY SCALES: BAR IS ONE INCH ON ORIGINAL DRAWING 0 — 1"
IF NOT ONE INCH ON THIS SHEET, ADJUST SCALES ACCORDINGLY

JOB NO. 6918B.10
DRAWING NO. GN-4
SHEET NO. 104 OF 107

Last Saved By: $(GETPROP)??
FILENAME: c:\pw_working\projectwise\crollins\dms60443\G-BDR 6-03-14 02:47pm CRollins XREFS: $(XREFS)??

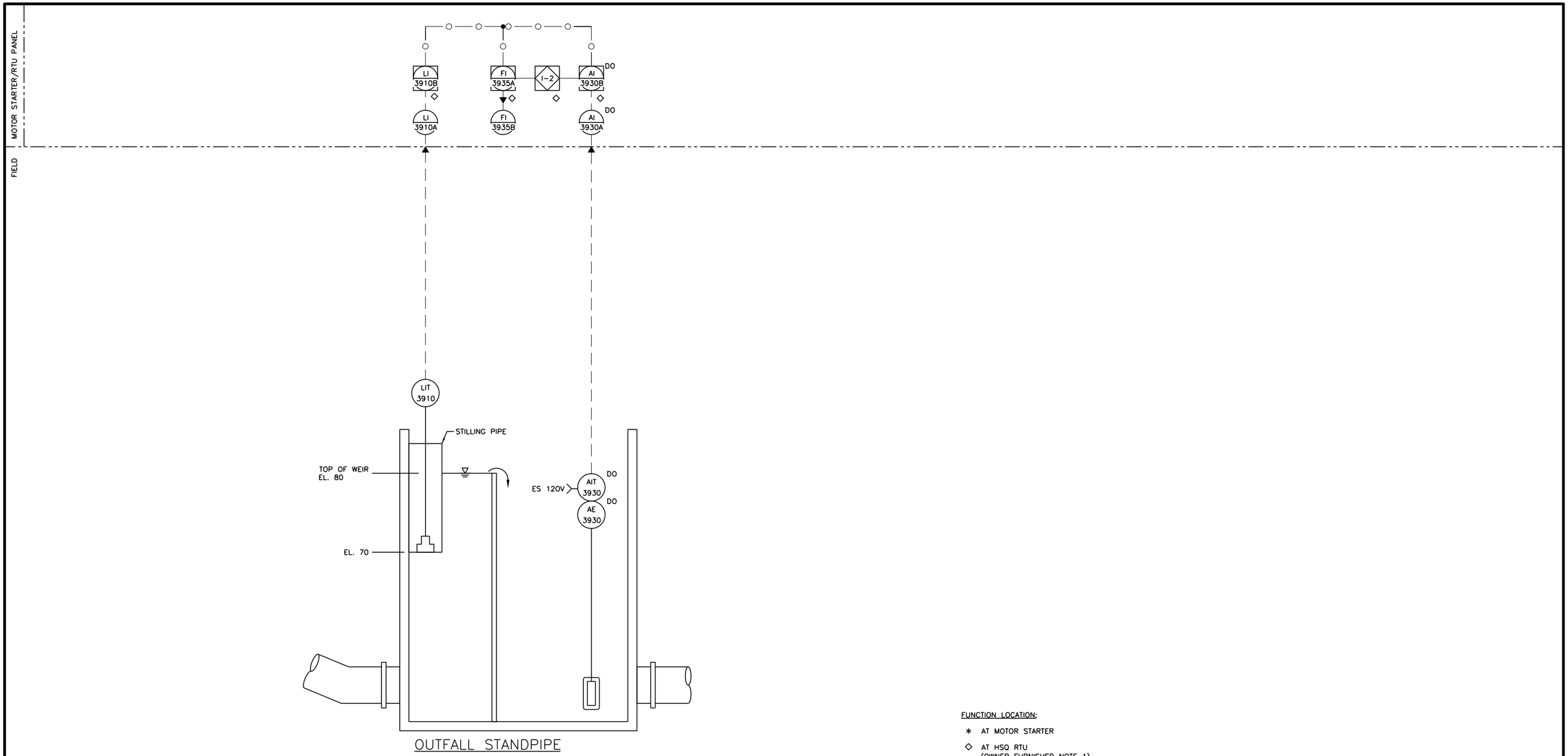

OUTFALL STANDPIPE

FUNCTION LOCATION:

* AT MOTOR STARTER

◇ AT HSQ RTU (OWNER FURNISHED NOTE 1)

△ AT FIELD LOCATION

INTERLOCK NOTES:

I-1: NOT USED.

I-2: PROGRAMMED LOGIC AT HSQ RTU, OWNER PROVIDED, CALCULATES FLOW OVER WEIR.

I-3: NOT USED.

I-4: MOTOR OPERATOR CIRCUIT AT SLIDE GATE.

NOTES;

1. OWNER WILL FURNISH RTU WHICH CONTRACTOR SHALL INSTALL. PROGRAMMING AT RTU WILL BE PROVIDED BY OWNER.

REV	DATE	BY	DESCRIPTION

RECORD DRAWINGS

DESIGNED AEB
DRAWN CGR
CHECKED PCK
DATE MAY 2012

DISCIPLINE ENGINEER: ORIGINAL SEALED BY ANTHONY L. MORRONI 11/30/11 E012875

PROJECT ENGINEER: ORIGINAL SEALED BY DARREN G. BAUNE 11/30/11 No. C68899

VICE PRESIDENT: ORIGINAL SEALED BY MICHAEL JAMES BRITTEN 11/30/11 No. C27729

carollo

CITY OF TURLOCK INC. 1908

STANISLAUS COUNTY, CALIFORNIA

HARDING DRAIN BYPASS

PUMP STATION AND PIPELINE

PROCESS AND INSTRUMENTATION

OUTFALL STANDPIPE P&ID

VERIFY SCALES

BAR IS ONE INCH ON ORIGINAL DRAWING

0 1"

IF NOT ONE INCH ON THIS SHEET, ADJUST SCALES ACCORDINGLY

JOB NO. 6918B.10

DRAWING NO. SP-N-1

SHEET NO. 105 OF 107

Last Saved By: $(GETPROP)??

FILENAME: c:\pw_working\projectwise\crollins\dms60443\G-BDR 6-03-14 02:47pm CRollins XREFS: $(XREFS)??

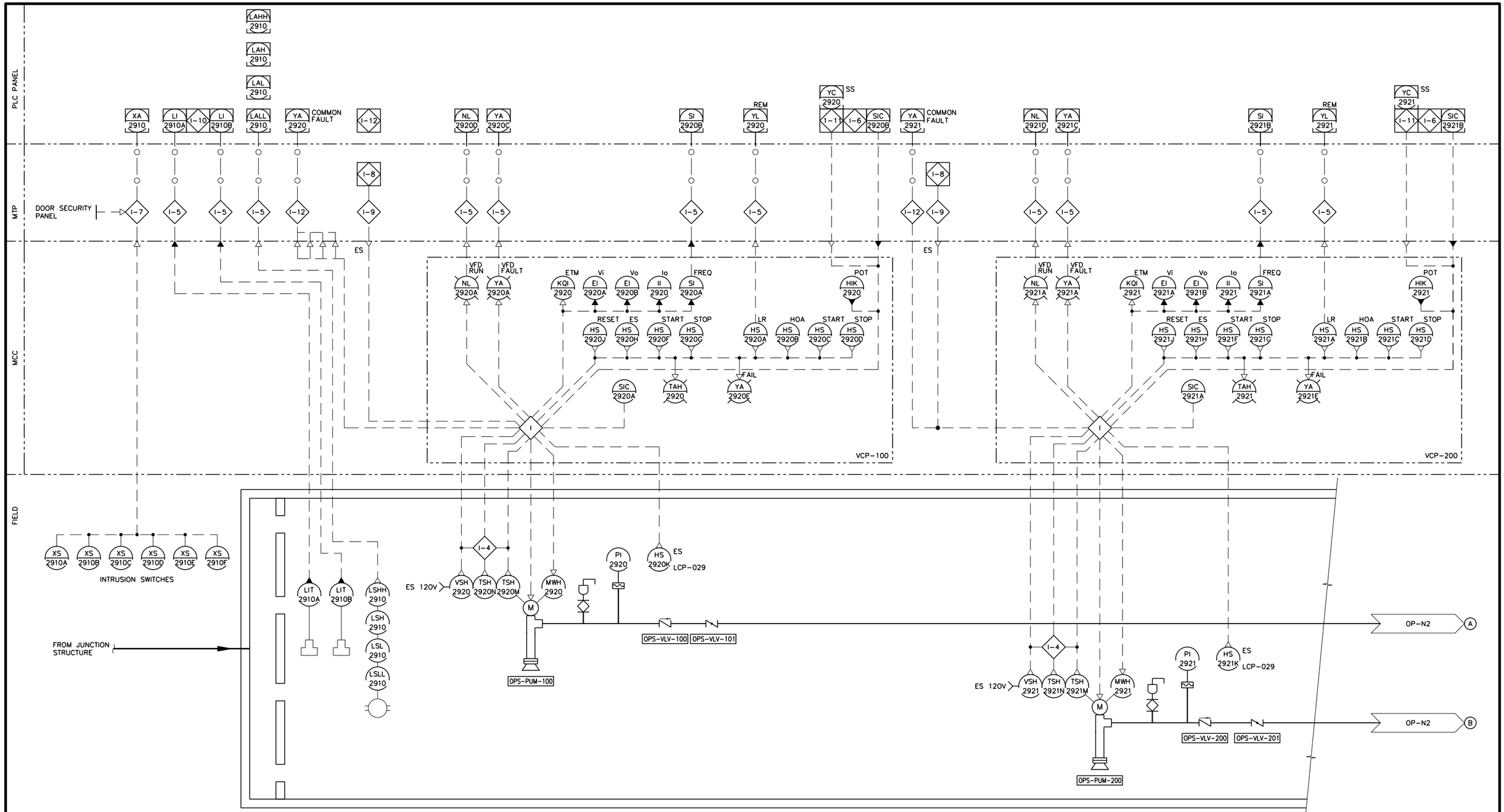

INTERLOCKS:

I-4: PUMP SHUTDOWN ON HIGH VIBRATION OR HIGH BEARING TEMP OR HIGH MOTOR TEMP.

I-5: SIGNALS TO/FROM PANEL MTP GO TO PLC AND RTU. SEE CONTROL SCHEMATIC.

I-6: PLC PUMP CONTROL STRATEGY. SEE SECTION 17101 FOR REQUIREMENTS.

I-7: INTRUSION ALARM. SEE CONTROL SCHEMATIC.

I-8: LOGIC AT RTU (CITY PROGRAMMED) FOR EMERGENCY STOP OF RESPECTIVE PUMP.

I-9: EMERGENCY STOP FROM RTU HARDWARE LOGIC AT MTP, SEE CONTROL SCHEMATIC.

I-10: PUMP STATION SHUTDOWN IF BOTH LIT-2910A AND LIT-2910B FAIL AFTER 0-2MIN TIME DELAY.

I-11: START/STOP VDF/RVSS PLC CONTROL

I-12: COMMON PUMP FAULT. SEE CONTROL SCHEMATIC

NOTES:

1. MWH = MOTOR WINDING HEATER.

REV	DATE	BY	DESCRIPTION

RECORD DRAWINGS

DESIGNED AEB
DRAWN CGR
CHECKED PCK
DATE MAY 2012

DISCIPLINE ENGINEER: ORIGINAL SEALED BY ANTHONY L. MORRONI 11/30/11 E012875
PROJECT ENGINEER: ORIGINAL SEALED BY DARREN G. BAUNE 11/30/11 No. C68899
VICE PRESIDENT: ORIGINAL SEALED BY MICHAEL JAMES BRITTEN 11/30/11 No. C27729

carollo

CITY OF TURLOCK INC. 1908
STANISLAUS COUNTY, CALIFORNIA

HARDING DRAIN BYPASS
PUMP STATION AND PIPELINE
PROCESS AND INSTRUMENTATION
OUTFALL PUMP STATION
P&ID 1

VERIFY SCALES
BAR IS ONE INCH ON ORIGINAL DRAWING
0 1"
IF NOT ONE INCH ON THIS SHEET, ADJUST SCALES ACCORDINGLY

JOB NO. 6918B.10
DRAWING NO. OP-N-1
SHEET NO. 106 OF 107

Last Saved By: $(GETPROP)??
FILENAME: c:\pw_working\projectwise\crollins\dms60443\G-BDR 6-03-14 02:47pm CRollins XREFS: $(XREFS)??

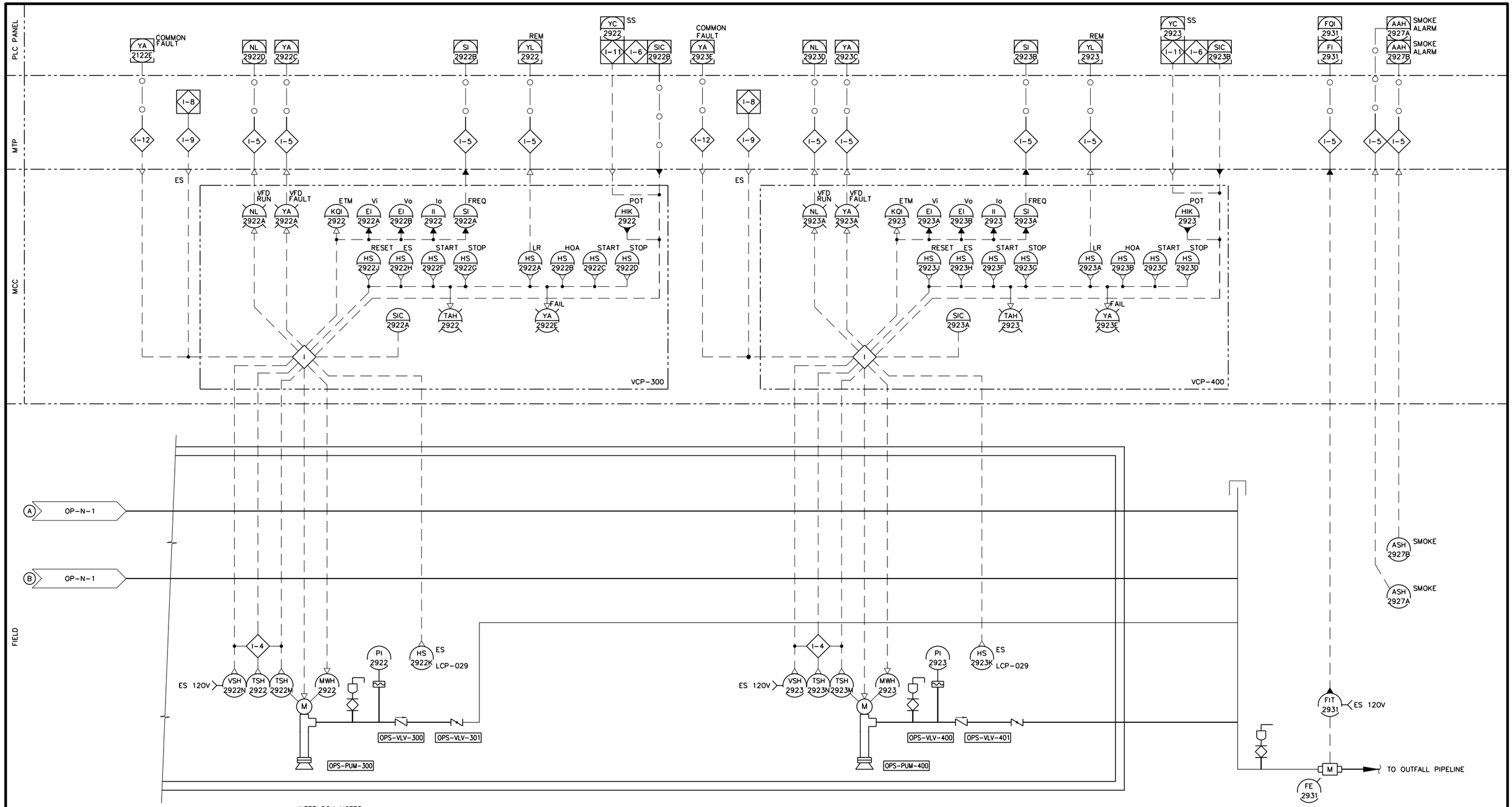

INTERLOCK NOTES:

I-4: PUMP SHUT DOWN ON HIGH VIBRATION OR HIGH BEARING TEMP OR HIGH MOTOR TEMP.

I-5: SIGNALS TO/FROM PANEL MTP GO TO PLC AND RTU. SEE CONTROL SCHEMATIC.

I-6: PLC PUMP CONTROL STRATEGY. SEE SECTION 17101 FOR REQUIREMENTS.

I-7: INTRUSION ALARM. SEE OP-N-1 AND CONTROL SCHEMATIC.

I-8: LOGIC AT RTU (CITY PROGRAMMED) FOR EMERGENCY STOP OF RESPECTIVE PUMP.

I-9: EMERGENCY STOP FROM RTU HARDWARE LOGIC AT MTP, SEE CONTROL SCHEMATIC.

I-11: STOP/START VFD/RVSS PLC CONTROL.

NOTES:

1. MWH = MOTOR WINDING HEATER.

REV	DATE	BY	DESCRIPTION

RECORD DRAWINGS

DESIGNED AEB
DRAWN CGR
CHECKED PCK
DATE MAY 2012

DISCIPLINE ENGINEER: ORIGINAL SEALED BY ANTHONY L. MORRONI 11/30/11 E012875

PROJECT ENGINEER: ORIGINAL SEALED BY DARREN G. BAUNE 11/30/11 No. C68899

VICE PRESIDENT: ORIGINAL SEALED BY MICHAEL JAMES BRITTEN 11/30/11 No. C27729

carollo

CITY OF TURLOCK INC. 1908

STANISLAUS COUNTY, CALIFORNIA

HARDING DRAIN BYPASS
PUMP STATION AND PIPELINE
PROCESS AND INSTRUMENTATION
OUTFALL PUMP STATION
P&ID 2

VERIFY SCALES
BAR IS ONE INCH ON ORIGINAL DRAWING
0 1"
IF NOT ONE INCH ON THIS SHEET, ADJUST SCALES ACCORDINGLY

JOB NO. 6918B.10
DRAWING NO. OP-N-2
SHEET NO. 107 OF 107

Last Saved By: $(GETPROP)??

FILENAME: c:\pw_working\projectwise\crollins\dms60443\G-BDR 6-03-14 02:47pm CRollins XREFS: $(XREFS)??